Cambridge IGCSE

Cambridge International Examinations
Cambridge International General Certificate of Secondary Education

CANDIDATE NAME									
CENTRE NUMBER						CANDIDATE NUMBER				

ENGLISH AS A SECOND LANGUAGE **0510/12**

Paper 1 Reading and Writing (Core) **May/June 2017**

1 hour 30 minutes

Candidates answer on the Question Paper.

No Additional Materials are required.

READ THESE INSTRUCTIONS FIRST

Write your Centre number, candidate number and name on all the work you hand in.
Write in dark blue or black pen.
Do not use staples, paper clips, glue or correction fluid.
DO **NOT** WRITE IN ANY BARCODES.

Answer **all** questions.
Dictionaries are **not** allowed.

At the end of the examination, fasten all your work securely together.
The number of marks is given in brackets [ ] at the end of each question or part question.

This document consists of **13** printed pages and **3** blank pages.

© UCLES 2017

Exercise 1

Read the guide about a Dark Sky Park in Northumberland in the UK, and then answer the following questions.

NORTHUMBERLAND DARK SKY PARK



About the Park

In Northumberland Dark Sky Park, in England, you can experience a night sky that is truly amazing. The skies are unpolluted by city lights, and this is the perfect place to come and spend time looking at the stars and planets. The park is the first of its kind in England, and the fourth largest in the world.

Managing the Park

All the lighting in the visitor centre and along the paths to the viewing platforms has to be monitored and controlled by staff so that the amount of light produced is kept as low as possible. This ensures that visitors have a perfect environment in which to view the stars. It is estimated that 85% of the UK population has never experienced the beauty of a clear night filled with billions of stars. It is not just stargazers who benefit from the limited lighting. The park is home to many nocturnal species, and the darker conditions create a suitable natural habitat for bats. There is also plenty for visitors to see during the day, including deer and a variety of birds.

Visitor Information

Although the park is open all year round, the best time for stargazing is during the autumn and winter months because daylight hours are the shortest. Many visitors prefer to bring binoculars, as although they don't provide such good views of the planets, they are easier to use and are also less expensive than a telescope. But if you do decide on a telescope, keep it simple and portable. You could easily spend over £2000 on the most up-to-date models, which are able to track objects in the sky automatically, without having to adjust the telescope manually. However, you don't need to spend this amount – a basic telescope will still give you good views of the night sky.

Visitors often spend many hours looking at the stars. At first, it can be difficult to see clearly in such a dark environment. For the majority of people, twenty minutes is enough time for their eyes to adjust to low light levels, although some find it can take up to forty minutes. You can bring a normal torch to help you find your way, but the white light that it produces does affect your ability to see in the dark. However, red light doesn't create this problem so, for best results, we recommend that you put a red cover over a normal torch. If you prefer, we sell suitable torches with a red light in the visitor centre, or alternatively, you can bring a red bike light if it's not too bright.

For more information go to www.visitskypark.com

© UCLES 2017

(a) Why is this area of Northumberland an ideal place to see stars?

View solution

.....[1]

(b) What do employees do to improve the experience of visitors?

View solution

.....[1]

(c) Why is it better to visit the park during certain times of the year?

View solution

.....[1]

(d) What is **one** advantage of using binoculars rather than a telescope?

View solution

.....[1]

(e) How long does it take most people to get used to seeing in the dark?

View solution

.....[1]

(f) What can you do instead of buying a special torch? Give **two** details.

View solution

.....

.....[2]

[Total: 7]

© UCLES 2017

Exercise 2

Read the article about sleep, and then answer the following questions.

A good night's sleep

Most of us spend a third of our lives sleeping, although some people say they need as little as four hours sleep a night. There are various factors which affect sleep – just ask nurses or factory employees who sometimes work night shifts how difficult they find it to change their sleep routines. We know that sleep is essential for brain growth, and also for maintaining memory skills. Although it has been said that the function of sleep is to give the body a chance to rest and recover, this is not entirely true. In reality, the amount of energy gained by sleeping is tiny – about the same as the energy we get from eating a piece of toast.

One way to understand the role of sleep is to look at what happens if you have too little. Some research has shown that sleep-deprived adults are less productive at work. If you have ever stayed up all night, you may have noticed some negative after-effects the next day, such as finding it hard to remember simple things at school. After just one night without sleep, you may struggle to concentrate in class.

Many people find their sleep is disturbed as a result of not having enough relaxing 'wind-down' time before going to bed. It is recommended that people should not look at screens for an hour before sleep. If we don't switch off our devices, our brains can't switch off either.

It has also been suggested that long-term sleep loss may increase the risk of obesity. Your body produces important chemicals while you sleep, which are vital for controlling how hungry you feel the next day. If your body doesn't produce sufficient levels of these chemicals, over time this may mean you put on weight.

According to Professor Joanna Kelly of the National Sleep Centre, the time spent sleeping each day declines during our lives. Newborn babies have 16 hours' sleep daily, which decreases to 12 hours by the time young children reach the age of two. This gradual decrease in sleep continues through childhood, with teenagers typically needing about 9 hours to function at their best. Although the research findings indicate this is the ideal situation, from her experience as the mother of teenage daughters, Joanna knows all too well that this does not always happen. Adults need about 8 hours' sleep, although as we get older, the quality of our sleep can suffer because we wake up frequently during the night.

Average daily animal sleep time

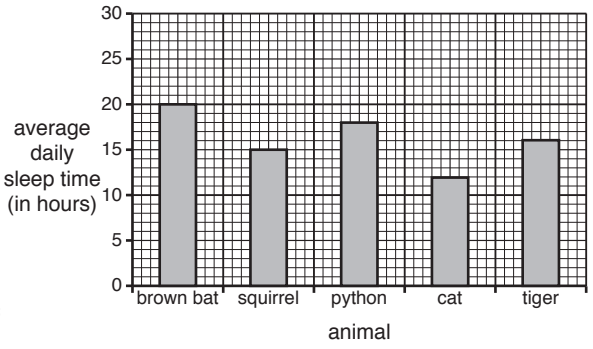

Just like humans, age also affects the sleep of animals. Another consideration is their position in the food chain – lower down the food chain, animals like deer must remain alert to possible predators, while those animals near the top tend to get more sleep, because they have little to fear. Captivity can also have a role – animals often sleep more in zoos, as they are safe from predators.

There are no definite rules about the ideal amount of sleep humans require. Professor Kelly sums up by saying: "The amount we need is the level that allows us to stay alert. My work with families suggests that some might benefit from changing their lifestyles." Our lives today are busy, and although regular sporting activities after work or college are great at providing exercise, this can also mean that we eat large meals late in the evening. This can cause digestion problems, which affect sleep, so a light snack is often preferable if you want a good night's sleep.

© UCLES 2017

(a) What is sleep important for?

View solution

.....[1]

(b) How can a lack of sleep affect studying? Give **two** details.

View solution

.....

.....[2]

(c) What is the short-term effect of chemicals released during sleep?

View solution

.....[1]

(d) On average, how long do two-year-olds sleep each day?

View solution

.....[1]

(e) How does Professor Kelly know that the research recommendations may not be realistic?

.....[1]

(f) What factors influence the sleeping habits of animals? Give **two** details.

View solution

.....

.....[2]

(g) According to the chart, which animal sleeps for the longest time each day, and for how long?

.....[1]

(h) What conclusion does Professor Kelly come to about how much sleep people should have?

.....[1]

(i) What type of meal is said to be more suitable to eat late at night?

.....[1]

[Total: 11]

View solution

© UCLES 2017

Exercise 3

Tammy Johnston lives in a town in Canada, and is a college student. She has received a survey from Fairfield Leisure, a local sports centre near her home at 254 August Avenue, Lissel Point. The survey is asking people for their opinions on the centre and its facilities. If Tammy completes the survey, she could win four months' free membership. This would be great because Tammy loves sports, not only as a way to keep fit, but also as a break from her busy college schedule. She enjoys playing football at college, and this has been a good way for her to make friends.

At the moment, Tammy pays each time she visits the centre, but is considering becoming a member, which is better value as she can go whenever she wants for a fixed monthly fee. She is already interested in running – she jogs in her local park every weekend. She would like the centre to provide some professional running coaching, because this would encourage her to run a marathon, which she hopes to do soon.

Tammy visits the centre regularly every Tuesday and Thursday after college. A friend, Jenni Tobin, goes with her once a week on Thursdays. They both really enjoy the Zumba fitness class, which is hugely popular because of the instructor, Maria Consuelo, who is really motivating. Tammy particularly likes going with Jenni, because Jenni has a car and gives her a lift – it's too far to walk. On Tuesdays, Tammy's mum drives her, as the bus is quite expensive. She is saving for her own car as she is seventeen, and now able to drive. She could go by bike, but a friend's bike was stolen recently and, until there is a safe area for keeping bikes at the centre, she does not want to take the risk.

Tammy likes the Zumba class, but swimming is her first choice. She swims at least thirty lengths of the pool a week, and likes both the temperature of the water and the poolside area. The changing rooms were recently redecorated after complaints about their cleanliness, and this has made the experience better.

Imagine you are Tammy. Complete the form, using the information above.

View solution

FAIRFIELD LEISURE
USER SURVEY

SECTION A: Personal Details

Full name: .....

Age: .....

Address: .....

Current member (please delete) YES / NO

SECTION B: Centre Use

How often do you visit the centre? .....

How do you travel to the centre? (please circle) bus car walk bike

What activities do you do at our centre? (please tick all that apply)

go running ☐ attend a fitness class ☐ play football ☐ go swimming ☐

What would you like us to improve at the centre? (please underline)

cleanliness security value for money

Is there a member of staff you've been impressed with? Tell us who and why!

Full name: .....

Reason: .....

SECTION C

In the space below, write **one** sentence about a sports programme you would like us to offer, and **one** sentence about why sport is important to you.

[Total: 14]

© UCLES 2017

Exercise 4

Read the article about the way amateur archaeologists use satellite technology, and then complete the notes on the following page.

Satellite imagery

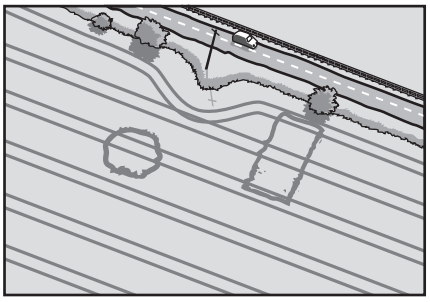

Nowadays, satellite technology is used to provide information on everything from population growth to forecasting the weather and making maps. This last example is particularly useful to those people with an interest in archaeology. In 2014, an amateur archaeologist called David Young was looking at an area of local countryside on a satellite map, when he noticed a single tree right in the middle of a field. David explains, "In the past, when farmers hit something large and hard while working in their fields, they often planted a small tree. This was easier than digging the object up, and reminded them to avoid this spot in future." When David investigated the area around the single tree, he found some buried coins in a large pot. In another image, he noticed a narrow strip of land where the grass was not growing well. This indicated that there was once an ancient roadway which had been buried over time. When he went to this location, he discovered some ancient cooking tools left behind by travellers who had probably stopped to eat.

David has some advice for other amateur archaeologists: "Unusual patterns in fields today can sometimes suggest evidence of an ancient community. However, as many of these fields will be on private farmland, remember to ask permission from the farmer before you start exploring a site." Landowners have reported that animals have escaped from their fields because gates have been left open. Additionally, some farmers have complained that crops have been damaged by people digging up an area that they think may contain something exciting.

Although amateur archaeologists don't generally use the more sophisticated technology and equipment that professionals have, the satellite images that are freely available online have made archaeology more accessible to everyone, with many advantages. For example, in just one year, amateur archaeologists identified the locations of hundreds of potentially interesting sites. This is important because as cities all over the world continue to expand, new building work can permanently cover places of historical importance. Amateur archaeologists are often able to provide details of the specific size of an area of interest, then professionals can decide whether or not to investigate further.

As well as being helpful in finding potential sites of worldwide importance, amateurs also have local knowledge which can be a valuable source of information for the professionals. They often look at images of places closer to their homes, and find things that might otherwise go unnoticed. For example, even strangely shaped areas of forest can be worth further professional investigation. Once a possible site has been identified, it is important that amateurs inform the professional archaeologists, who understand the importance of recording exactly where items are found. This information can be lost if the correct procedures are not followed when the object is removed from the ground. Also, some people keep what they find for themselves, rather than sharing their discovery.

"If you find something of interest, contact the experts. If you want to be more involved, join a local archaeology group. It will probably have links to professional archaeologists," says David. Indeed, many professionals rely on amateurs for a variety of things, from the discovery of possible sites to assisting at the site itself. It is a relationship that can work well for both groups.

View solution

© UCLES 2017

You are going to give a talk to your class about amateur archaeologists and the use of satellite technology. Prepare some notes to use as the basis for your talk.

Make short notes under each heading.

Clues that a site is worth investigation

- .....
- .....
- .....

Benefits amateurs bring to archaeology

- .....
- .....

Problems caused by amateurs

- .....
- .....

[Total: 7]

View solution

Exercise 5

Imagine that you have given your talk to your class. Now your teacher has asked you to write a summary for homework.

Look at your notes for Exercise 4. Using the ideas in your notes, write a summary about amateur archaeologists and the use of satellite technology.

Your summary should be about 70 words long (and no more than 80 words long). You should use your own words as far as possible.

.....

.....

.....

.....

.....

.....

.....

.....

[Total: 5]

© UCLES 2017

Exercise 6

View solution

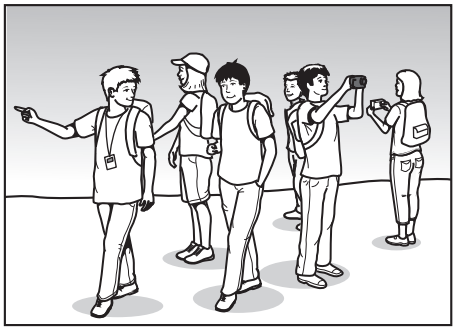



You have recently been on an educational trip with your college.

Write an email to a friend in another country about the trip.

In your email, you should:

- describe the place you went to
- say what you learned there
- explain how you are going to use this knowledge in the future.

The pictures above may give you some ideas, and you should try to use some ideas of your own.

Your email should be between 100 and 150 words long.

You will receive up to 7 marks for the content of your email, and up to 6 marks for the style and accuracy of your language.

© UCLES 2017

[Total: 13]

© UCLES 2017

Exercise 7

Some people think that practical subjects like cookery and woodwork should not be taught in schools, and that only academic subjects are important.

View solution

Here are some comments from young people about this idea:

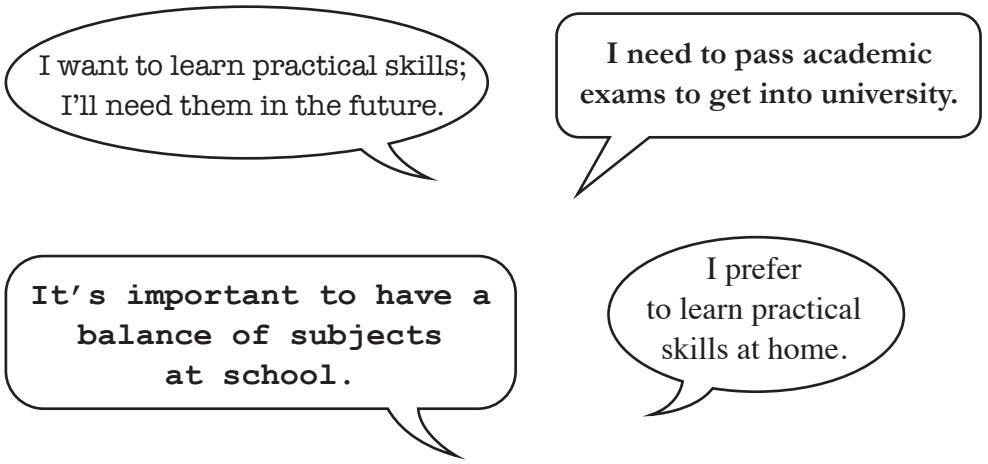

Write an article for your school magazine, giving your views.

The comments above may give you some ideas, and you should try to use some ideas of your own.

Your article should be between 100 and 150 words long.

You will receive up to 7 marks for the content of your article, and up to 6 marks for the style and accuracy of your language.

© UCLES 2017

[Total: 13]

© UCLES 2017

BLANK PAGE

© UCLES 2017

BLANK PAGE

© UCLES 2017

BLANK PAGE

Permission to reproduce items where third-party owned material protected by copyright is included has been sought and cleared where possible. Every reasonable effort has been made by the publisher (UCLES) to trace copyright holders, but if any items requiring clearance have unwittingly been included, the publisher will be pleased to make amends at the earliest possible opportunity.

To avoid the issue of disclosure of answer-related information to candidates, all copyright acknowledgements are reproduced online in the Cambridge International Examinations Copyright Acknowledgements Booklet. This is produced for each series of examinations and is freely available to download at www.cie.org.uk after the live examination series.

Cambridge International Examinations is part of the Cambridge Assessment Group. Cambridge Assessment is the brand name of University of Cambridge Local Examinations Syndicate (UCLES), which is itself a department of the University of Cambridge.

© UCLES 2017