Cambridge IGCSE

Cambridge International Examinations
Cambridge International General Certificate of Secondary Education

CANDIDATE NAME	
CENTRE NUMBER	
CANDIDATE NUMBER	

MATHEMATICS **0580/22**

Paper 2 (Extended) **May/June 2015**

1 hour 30 minutes

Candidates answer on the Question Paper.

Additional Materials: Electronic calculator
Tracing paper (optional)
Geometrical instruments

READ THESE INSTRUCTIONS FIRST

Write your Centre number, candidate number and name on all the work you hand in.
Write in dark blue or black pen.
You may use an HB pencil for any diagrams or graphs.
Do not use staples, paper clips, glue or correction fluid.
DO **NOT** WRITE IN ANY BARCODES.

Answer **all** questions.
If working is needed for any question it must be shown below that question.
Electronic calculators should be used.
If the degree of accuracy is not specified in the question, and if the answer is not exact, give the answer to three significant figures. Give answers in degrees to one decimal place.
For π, use either your calculator value or 3.142.

At the end of the examination, fasten all your work securely together.
The number of marks is given in brackets [ ] at the end of each question or part question.
The total of the marks for this paper is 70.

The syllabus is approved for use in England, Wales and Northern Ireland as a Cambridge International Level 1/Level 2 Certificate.

This document consists of **15** printed pages and **1** blank page.

© UCLES 2015

CAMBRIDGE International Examinations

1 Write 53 400 000 in standard form.

View solution

Answer ..... [1]

---

2 A doctor starts work at 20 40 and finishes work at 06 10 the next day.

View solution

How long is the doctor at work?
Give your answer in hours and minutes.

Answer ..... h ..... min [1]

---

3 $81^x = 3$

View solution

Find the value of x.

Answer x = ... [1]

---

4 7 9 20 3 9

(a) A number is removed from this list and the median and range do not change.

View solution

Write down this number.

Answer(a) ..... [1]

(b) An extra number is included in the original list and the mode does not change.

View solution

Write down a possible value for this number.

Answer(b) ..... [1]

© UCLES 2015

5 A biased 4-sided dice is rolled.
The possible scores are 1, 2, 3 or 4.
The probability of rolling a 1, 3 or 4 is shown in the table.

View solution

Score	1	2	3	4
Probability	0.15		0.3	0.35

Complete the table. [2]

---

6 Solve.

$5(w + 4 \times 10^3) = 6 \times 10^4$

View solution

Answer $w =$ ..... [2]

7

View solution

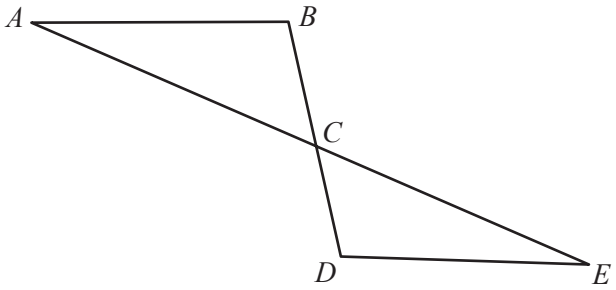

NOT TO SCALE

The diagram shows two straight lines, *AE* and *BD*, intersecting at *C*.
Angle *ABC* = angle *EDC*.
Triangles *ABC* and *EDC* are congruent.

Write down **two** properties of line segments *AB* and *DE*.

Answer AB and *DE* are .....

and ..... [2]

© UCLES 2015

8 5, 11, 21, 35, 53, ...

View solution

Find the *n*th term of this sequence.

Answer ..... [2]

---

9 Write the recurring decimal $0.2\dot{5}$ as a fraction.
[$0.2\dot{5}$ means 0.2555...]

View solution

Answer ..... [2]

---

10 One year ago Ahmed's height was 114 cm.
Today his height is 120 cm.
Both measurements are correct to the nearest centimetre.

View solution

Work out the upper bound for the increase in Ahmed's height.

Answer ..... cm [2]

---

11 $\mathbf{M} = \begin{pmatrix} 3 & 1 \\ -11 & -2 \end{pmatrix}$

View solution

Find $\mathbf{M}^{-1}$, the inverse of $\mathbf{M}$.

Answer $\begin{pmatrix} & \\ & \end{pmatrix}$ [2]

© UCLES 2015

12 Without using a calculator, work out $\frac{4}{5} \div 2\frac{2}{3}$.

View solution

Write down all the steps of your working and give your answer as a fraction in its simplest form.

Answer ..... [3]

13

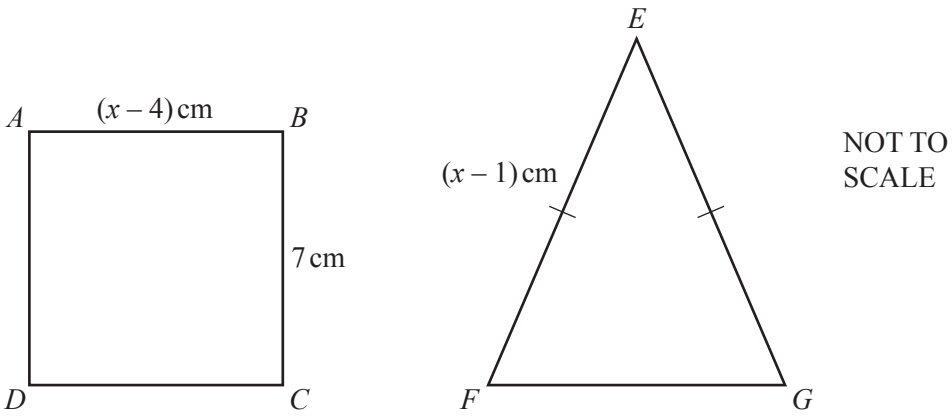

(a) *ABCD* is a square.

View solution

Find the value of x.

Answer(a) x = ... [1]

(b) Square *ABCD* and isosceles triangle *EFG* have the same perimeter.

View solution

Work out the length of *FG*.

Answer(b) FG = ... cm [2]

© UCLES 2015

14

View solution

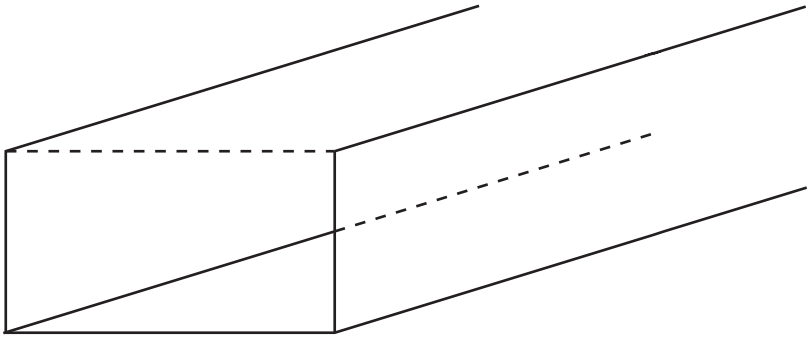

The diagram shows a channel for water.
The channel lies on horizontal ground.
This channel has a constant rectangular cross section with area 0.95 m^2.
The channel is full and the water flows through the channel at a rate of 4 metres/**minute**.

Calculate the number of cubic metres of water that flow along the channel in 3 **hours**.

Answer ..... m^3 [3]

---

15 Write as a single fraction in its simplest form.

View solution

$$\frac{3}{x+2} - \frac{4}{2x-5}$$

Answer ..... [3]

© UCLES 2015

16 **(a)** Find the value of

(i) $\left(\frac{1}{4}\right)^{0.5}$,

View solution

Answer(a)(i) ..... [1]

(ii) $(-8)^{\frac{2}{3}}$.

View solution

Answer(a)(ii) ..... [1]

(b) Use a calculator to find the decimal value of $\dfrac{\sqrt{29-3\times 32^{0.4}}}{3}$.

View solution

Answer(b) ..... [1]

17

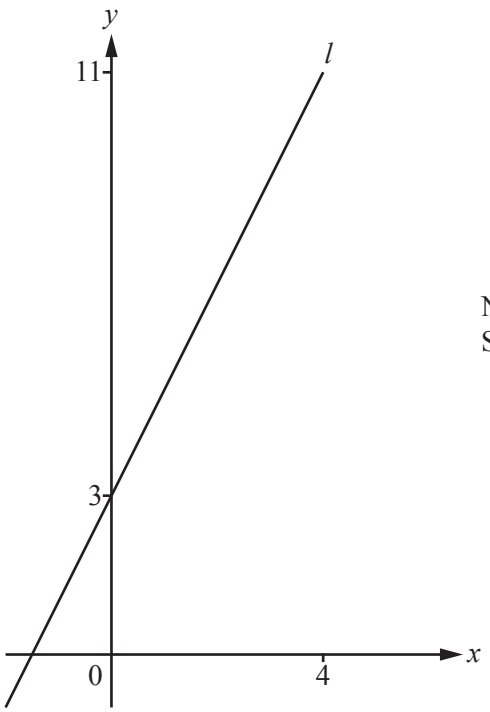

NOT TO SCALE

The diagram shows the straight line, l, which passes through the points (0, 3) and (4, 11).

(a) Find the equation of line l in the form $y = mx + c$.

View solution

Answer(a) $y =$ ..... [3]

(b) Line p is perpendicular to line l.

Write down the gradient of line p.

View solution

Answer(b) ..... [1]

© UCLES 2015

18

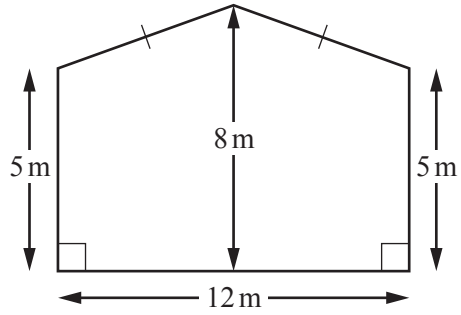

NOT TO SCALE

The diagram shows the front face of a barn.
The width of the barn is 12 m.
The height of the barn is 8 m.
The sides of the barn are both of height 5 m.

(a) Work out the area of the front face of the barn.

View solution

Answer(a) ..... m^2 [3]

(b) The length of the barn is 15 m.

Work out the volume of the barn.

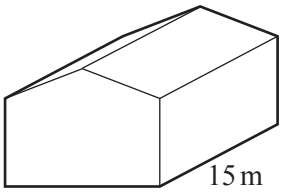

NOT TO SCALE

View solution

Answer(b) ..... m^3 [1]

19 The diagram shows the positions of three points A, B and C.

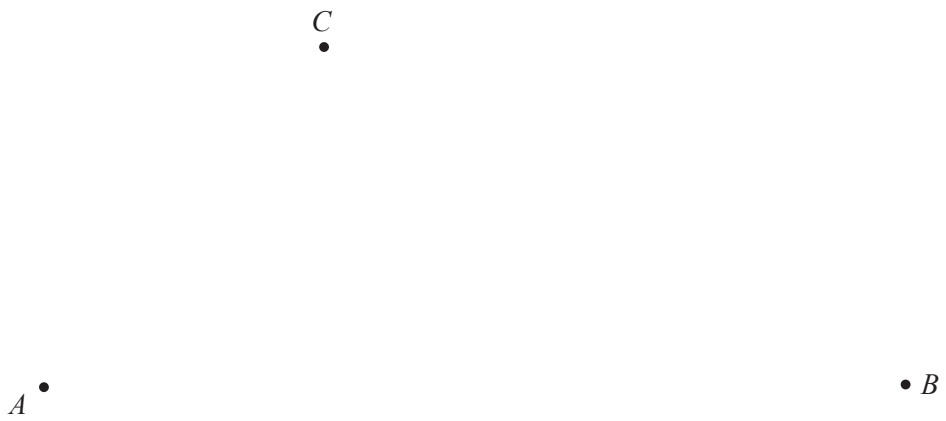

(a) Draw the locus of points which are 4 cm from C. [1]

(b) **Using a straight edge and compasses only**, construct the locus of points which are equidistant from A and B. [2]

(c) Shade the region which is

- less than 4 cm from C

and

- nearer to B than to A. [1]

20 **(a)** You may use this Venn diagram to help you answer **part (a)**.

View solution

$\mathscr{E} = \{x : 1 \leqslant x \leqslant 12, x \text{ is an integer}\}$
$M = \{\text{odd numbers}\}$
$N = \{\text{multiples of 3}\}$

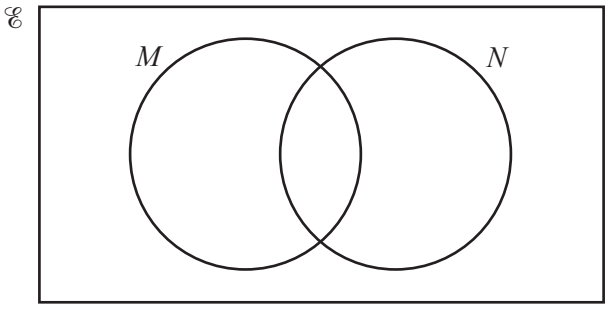

(i) Find n(N).

Answer(a)(i) ..... [1]

(ii) Write down the set $M \cap N$.

View solution

Answer(a)(ii) $M \cap N = \{$ ..... $\}$ [1]

(iii) Write down a set P where $P \subset M$.

View solution

Answer(a)(iii) $P = \{$ ..... $\}$ [1]

(b) Shade $(A \cup C) \cap B'$ in the Venn diagram below.

View solution

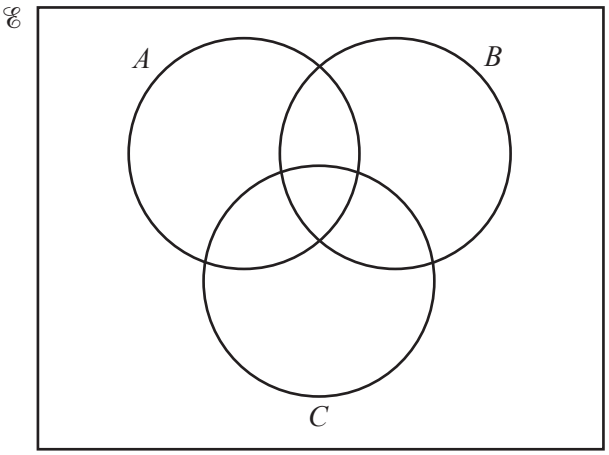

[1]

21 $f(x) = x^2 + 4x - 6$

View solution

(a) $f(x)$ can be written in the form $(x + m)^2 + n$.

Find the value of m and the value of n.

Answer(a) m = ...

n = ... [2]

View solution

(b) Use your answer to **part (a)** to find the positive solution to $x^2 + 4x - 6 = 0$.

Answer(b) x = ... [2]

22 The cumulative frequency diagram shows information about the distances travelled, in kilometres, by 60 people.

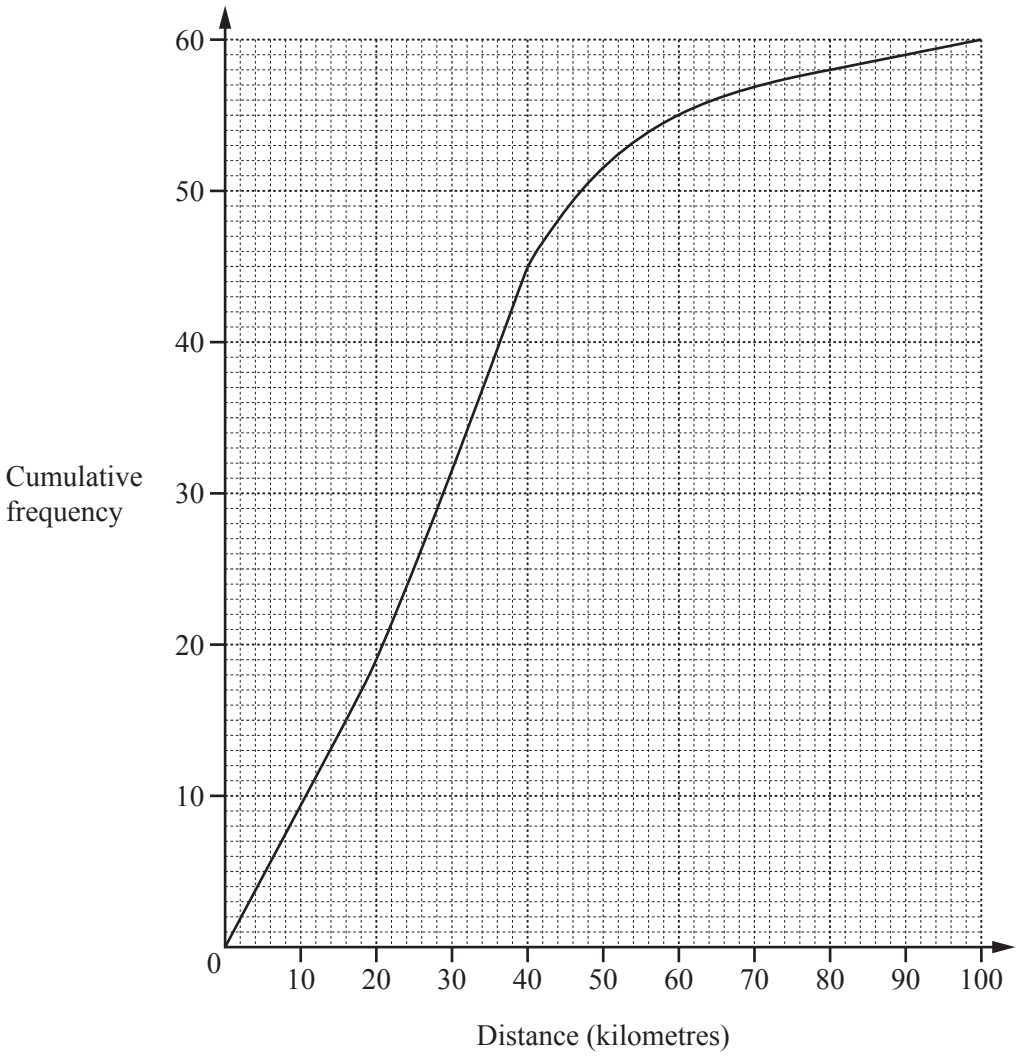

Find

(a) the 80th percentile,

View solution

Answer(a) ..... km [2]

(b) the inter-quartile range,

View solution

Answer(b) ..... km [2]

(c) the number of people who travelled more than 60 km.

View solution

Answer(c) ..... [2]

23

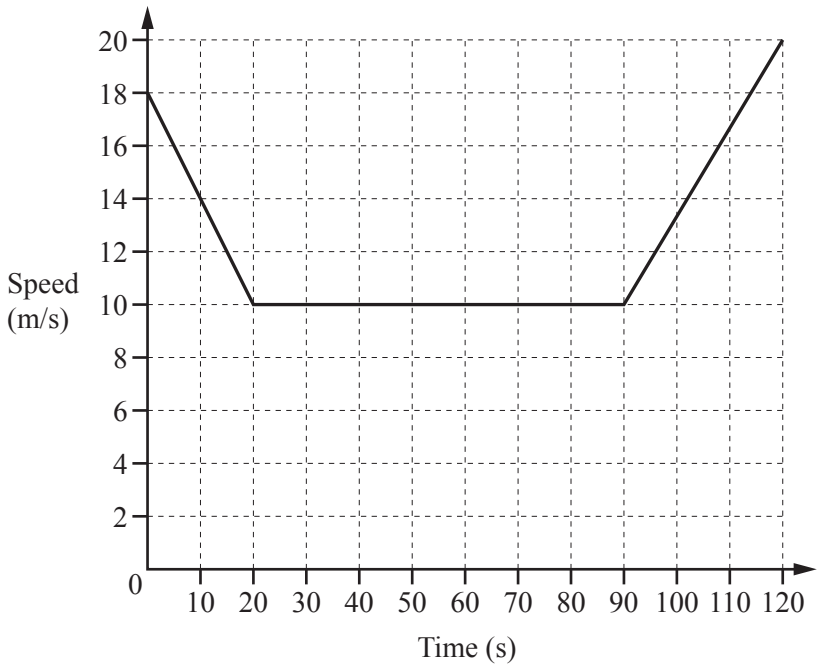

The diagram shows the speed-time graph for 120 seconds of a car journey.

(a) Calculate the deceleration of the car during the first 20 seconds.

View solution

Answer(a) ..... m/s^2 [1]

(b) Calculate the total distance travelled by the car during the 120 seconds.

View solution

Answer(b) ..... m [3]

(c) Calculate the average speed for this 120 second journey.

View solution

Answer(c) ..... m/s [1]

24 $f(x) = 3x + 5$ $g(x) = x^2$

(a) Find $g(3x)$.

View solution

Answer(a) ..... [1]

(b) Find $f^{-1}(x)$, the inverse function.

View solution

Answer(b) $f^{-1}(x) =$ ..... [2]

(c) Find $ff(x)$.
Give your answer in its simplest form.

View solution

Answer(c) ..... [2]

© UCLES 2015

BLANK PAGE

Permission to reproduce items where third-party owned material protected by copyright is included has been sought and cleared where possible. Every reasonable effort has been made by the publisher (UCLES) to trace copyright holders, but if any items requiring clearance have unwittingly been included, the publisher will be pleased to make amends at the earliest possible opportunity.

To avoid the issue of disclosure of answer-related information to candidates, all copyright acknowledgements are reproduced online in the Cambridge International Examinations Copyright Acknowledgements Booklet. This is produced for each series of examinations and is freely available to download at www.cie.org.uk after the live examination series.

Cambridge International Examinations is part of the Cambridge Assessment Group. Cambridge Assessment is the brand name of University of Cambridge Local Examinations Syndicate (UCLES), which is itself a department of the University of Cambridge.