Cambridge IGCSE

**Cambridge International Examinations**
Cambridge International General Certificate of Secondary Education

| | | | | | | | | | |
|---|---|---|---|---|---|---|---|---|---|
| CANDIDATE NAME | | | | | | | | | |
| CENTRE NUMBER | | | | | | CANDIDATE NUMBER | | | | |

**MATHEMATICS** **0580/41**

Paper 4 (Extended) **May/June 2015**

**2 hours 30 minutes**

Candidates answer on the Question Paper.

Additional Materials: Electronic calculator
Tracing paper (optional).
Geometrical instruments

**READ THESE INSTRUCTIONS FIRST**

Write your Centre number, candidate number and name on all the work you hand in.
Write in dark blue or black pen.
You may use an HB pencil for any diagrams or graphs.
Do not use staples, paper clips, glue or correction fluid.
DO **NOT** WRITE IN ANY BARCODES.

Answer **all** questions.
If working is needed for any question it must be shown below that question.
Electronic calculators should be used.
If the degree of accuracy is not specified in the question, and if the answer is not exact, give the answer to three significant figures. Give answers in degrees to one decimal place.
For $\pi$, use either your calculator value or 3.142.

At the end of the examination, fasten all your work securely together.
The number of marks is given in brackets [ ] at the end of each question or part question.
The total of the marks for this paper is 130.

The syllabus is approved for use in England, Wales and Northern Ireland as a Cambridge International Level 1/Level 2 Certificate.

This document consists of **20** printed pages.

© UCLES 2015

CAMBRIDGE International Examinations

**1** 12 000 vehicles drive through a road toll on one day.
The ratio cars : trucks : motorcycles = 13 : 8 : 3.

**(a) (i)** Show that 6500 cars drive through the road toll on that day.

View solution

*Answer(a)*(i)

[1]

**(ii)** Calculate the number of trucks that drive through the road toll on that day.

View solution

*Answer(a)*(ii) ..... [1]

**(b)** The toll charges in 2014 are shown in the table.

View solution

| Vehicle | Charge |
|---|---|
| Cars | \$2 |
| Trucks | \$5 |
| Motorcycles | \$1 |

Show that the total amount paid in tolls on that day is \$34 500.

*Answer(b)*

[2]

**(c)** This total amount is a decrease of 8% on the total amount paid on the same day in 2013.

Calculate the total amount paid on that day in 2013.

View solution

*Answer(c)* $..... [3]

**(d)** 2750 of the 6500 car drivers pay their toll using a credit card.

Write down, in its simplest terms, the fraction of car drivers who pay using a credit card.

View solution

*Answer(d)* ..... [2]

**(e)** To the nearest thousand, 90 000 cars drive through the road toll in one week.

Write down the lower bound for this number of cars.

View solution

*Answer(e)* ..... [1]

© UCLES 2015

**2** The table shows some values for $y = x^2 - \frac{1}{2x}$, $x \neq 0$.

| $x$ | –2 | –1.5 | –1 | –0.5 | –0.25 | –0.2 | 0.2 | 0.25 | 0.5 | 1 | 1.5 | 2 |
|---|---|---|---|---|---|---|---|---|---|---|---|---|
| $y$ | 4.25 | 2.58 | | | 2.06 | 2.54 | –2.46 | –1.94 | | | 1.92 | 3.75 |

**(a)** Complete the table of values. View solution [4]

**(b)** On the grid, draw the graph of $y = x^2 - \frac{1}{2x}$ for $-2 \leqslant x \leqslant -0.2$ and $0.2 \leqslant x \leqslant 2$.

View solution

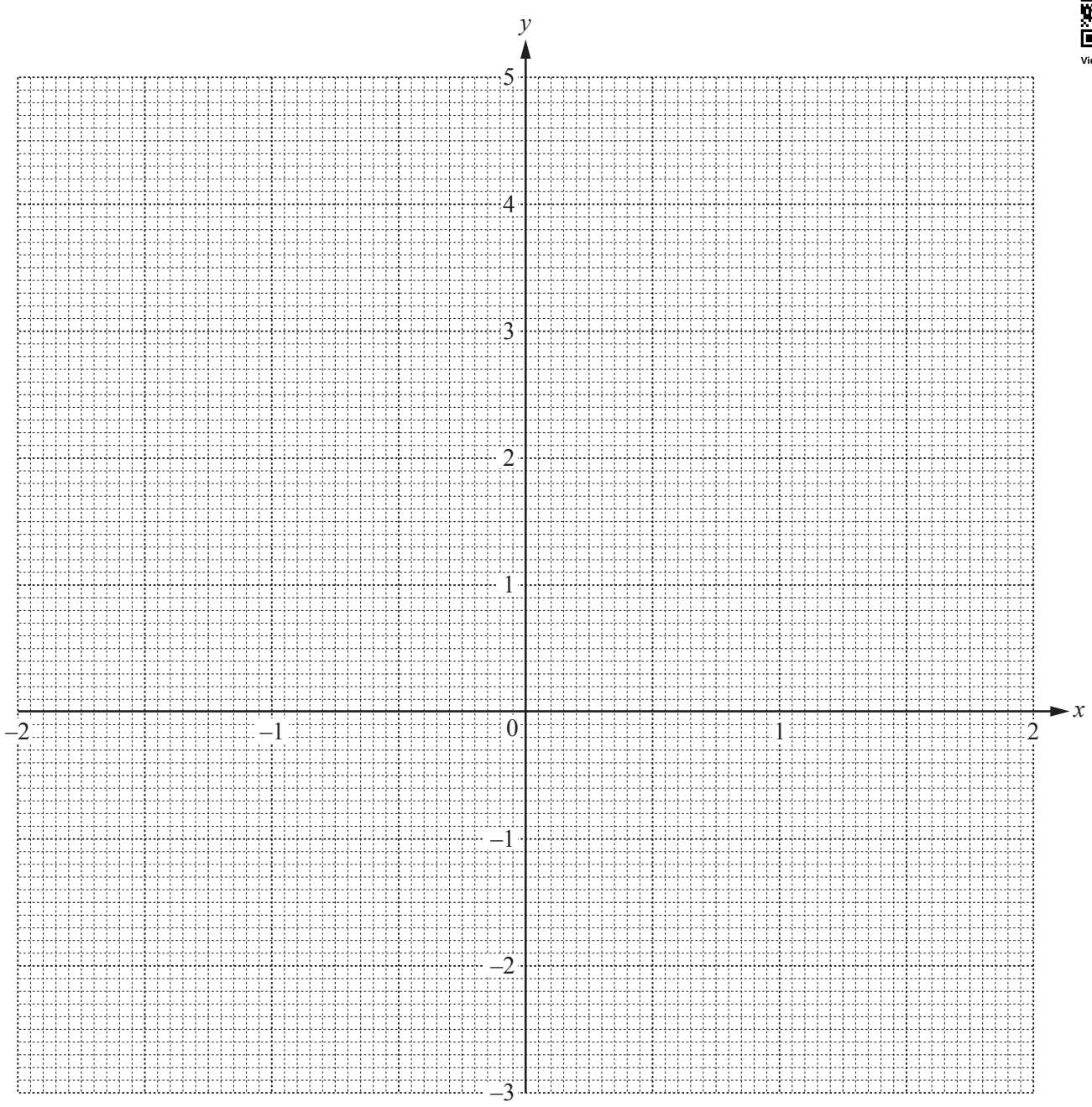


[5]

**(c)** By drawing a suitable line, use your graph to solve the equation $x^2 - \frac{1}{2x} = 2$.

View solution

*Answer(c)* $x =$ ..... or $x =$ ..... or $x =$ ..... [3]

© UCLES 2015

**(d)** The equation $x^2 - \frac{1}{2x} = k$ has only one solution.

View solution

Write down the range of values of $k$ for which this is possible.

*Answer(d)* ..... [2]

**(e)** By drawing a suitable tangent, find an estimate of the gradient of the curve at the point where $x = -1$.

View solution

*Answer(e)* ..... [3]

**3**

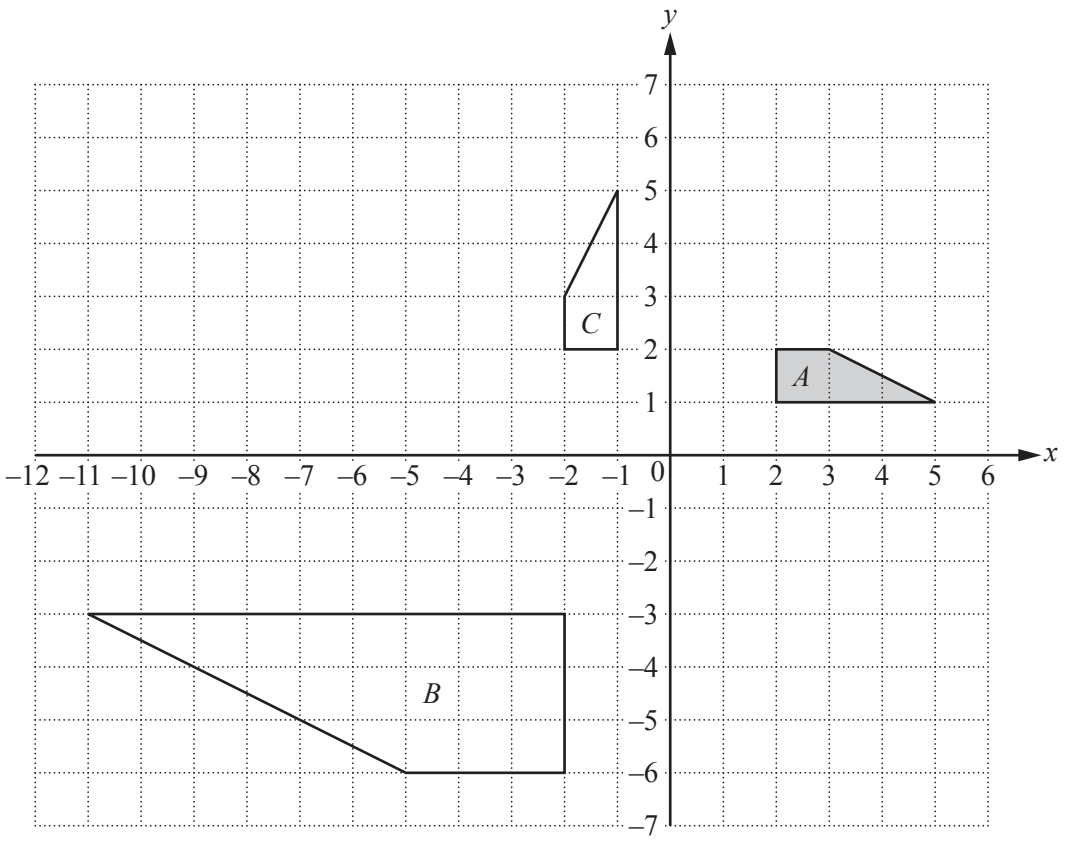


**(a)** Draw the image of

**(i)** shape $A$ after a translation by $\begin{pmatrix} -1 \\ 3 \end{pmatrix}$, [2]

**(ii)** shape $A$ after a rotation through 180° about the point (0, 0), [2]

**(iii)** shape $A$ after the transformation represented by the matrix $\begin{pmatrix} 1 & 0 \\ 0 & -1 \end{pmatrix}$. [3]

**(b)** Describe fully the **single** transformation that maps shape $A$ onto shape $B$.

*Answer(b)* .....

..... [3]

**(c)** Find the matrix which represents the transformation that maps shape $A$ onto shape $C$.

*Answer(c)* $\begin{pmatrix} & \\ & \end{pmatrix}$ [2]

© UCLES 2015

**4** 30 students were asked if they had a bicycle ($B$), a mobile phone ($M$) and a computer ($C$).
The results are shown in the Venn diagram.

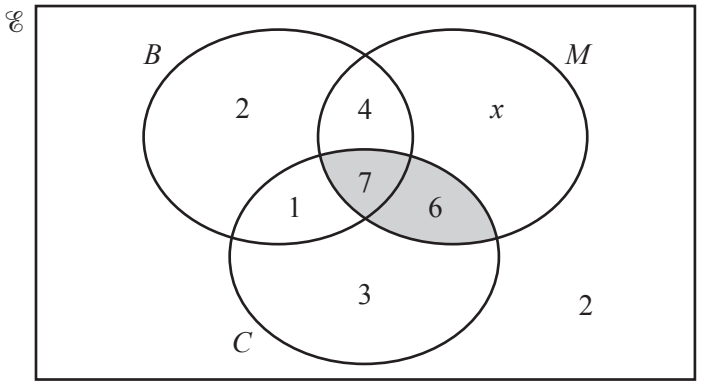


**(a)** Work out the value of $x$.

View solution

*Answer(a)* $x =$ ..... [1]

**(b)** Use set notation to describe the shaded region in the Venn diagram.

View solution

*Answer(b)* ..... [1]

**(c)** Find $\mathrm{n}(C \cap (M \cup B)')$.

View solution

*Answer(c)* ..... [1]

**(d)** A student is chosen at random.

View solution

**(i)** Write down the probability that the student is a member of the set $M'$.

*Answer(d)*(i) ..... [1]

**(ii)** Write down the probability that the student has a bicycle.

View solution

*Answer(d)*(ii) ..... [1]

**(e)** Two students are chosen at random from the students who have computers.

View solution

Find the probability that each of these students has a mobile phone but no bicycle.

*Answer(e)* ..... [3]

© UCLES 2015

**5** **(a)** Andrei stands on level horizontal ground, 294 m from the foot of a vertical tower which is 55 m high.

**(i)** Calculate the angle of elevation of the top of the tower.

View solution

*Answer(a)*(i) ..... [2]

**(ii)** Andrei walks a distance $x$ metres directly towards the tower.
The angle of elevation of the top of the tower is now 24.8°.

View solution

Calculate the value of $x$.

*Answer(a)*(ii) $x$ = ..... [4]

**(b)** The diagram shows a pyramid with a horizontal rectangular base.

View solution

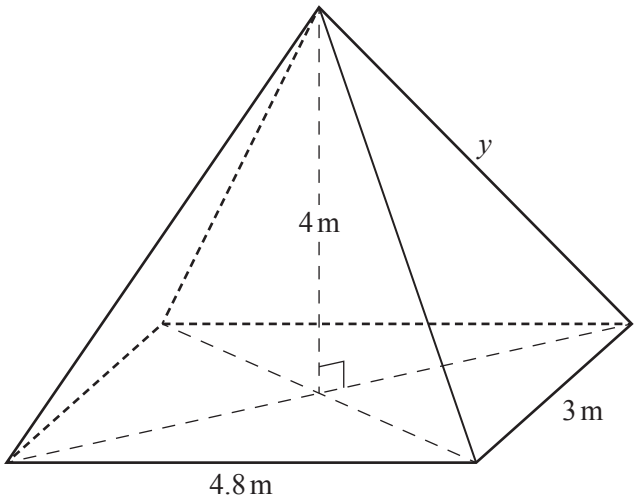


NOT TO SCALE

The rectangular base has length 4.8 m and width 3 m and the height of the pyramid is 4 m.

Calculate

**(i)** $y$, the length of a sloping edge of the pyramid,

*Answer(b)*(i) $y$ = ..... m [4]

**(ii)** the angle between a sloping edge and the rectangular base of the pyramid.

View solution

*Answer(b)*(ii) ..... [2]

**6** The table shows the time, $t$ minutes, that 400 people take to complete a test.

| Time taken ($t$ mins) | $0 < t \leqslant 10$ | $10 < t \leqslant 24$ | $24 < t \leqslant 30$ | $30 < t \leqslant 40$ | $40 < t \leqslant 60$ | $60 < t \leqslant 70$ |
|---|---|---|---|---|---|---|
| Frequency | 10 | 90 | 135 | 85 | 70 | 10 |

**(a) (i)** Write down the modal time interval.

View solution

*Answer(a)*(i) ..... min [1]

**(ii)** Calculate an estimate of the mean time taken to complete the test.

View solution

*Answer(a)*(ii) ..... min [4]

**(b) (i)** Complete the table of cumulative frequencies.

View solution

| Time taken ($t$ mins) | $t \leqslant 10$ | $t \leqslant 24$ | $t \leqslant 30$ | $t \leqslant 40$ | $t \leqslant 60$ | $t \leqslant 70$ |
|---|---|---|---|---|---|---|
| Cumulative frequency | 10 | 100 | | | | 400 |

[2]

**(ii)** On the grid opposite, draw a cumulative frequency diagram to show this information.

View solution

© UCLES 2015

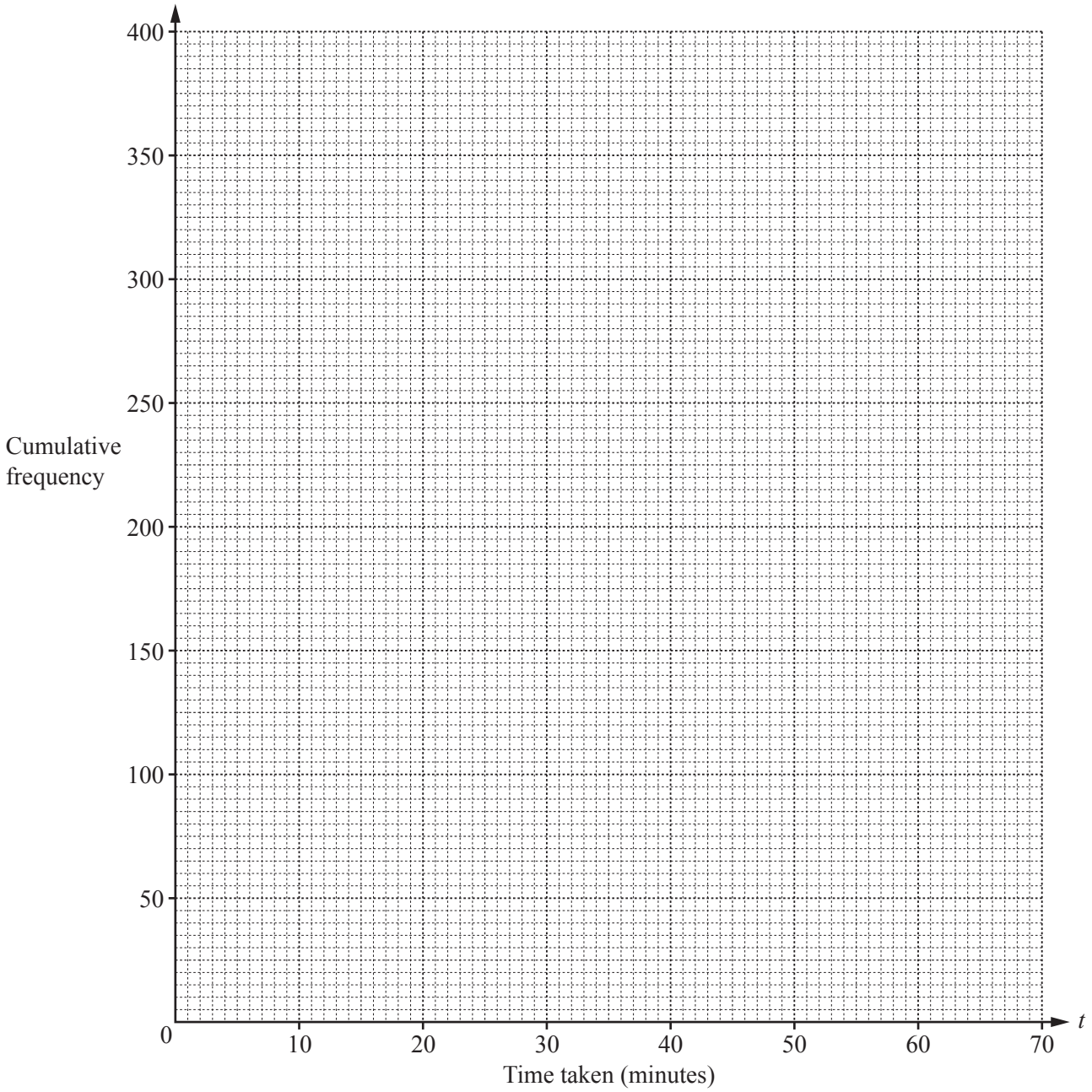


View solution [3]

**(c)** Use your graph to estimate

**(i)** the median time,

*Answer(c)*(i) ..... min [1]

**(ii)** the inter-quartile range,

*Answer(c)*(ii) ..... min [2]

**(iii)** the 15th percentile,

*Answer(c)*(iii) ..... min [2]

**(iv)** the number of people who took more than 50 minutes.

*Answer(c)*(iv) ..... [2]

© UCLES 2015

**7 (a)**

View solution

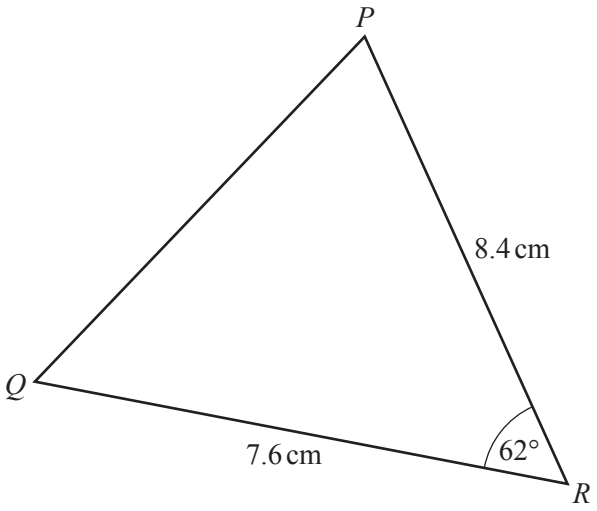


NOT TO SCALE

In the triangle $PQR$, $QR = 7.6$ cm and $PR = 8.4$ cm.
Angle $QRP = 62°$.

Calculate

**(i)** $PQ$,

*Answer(a)*(i) $PQ =$ ..... cm [4]

**(ii)** the area of triangle $PQR$.

View solution

*Answer(a)*(ii) ..... $cm^2$ [2]

© UCLES 2015

**(b)**

View solution

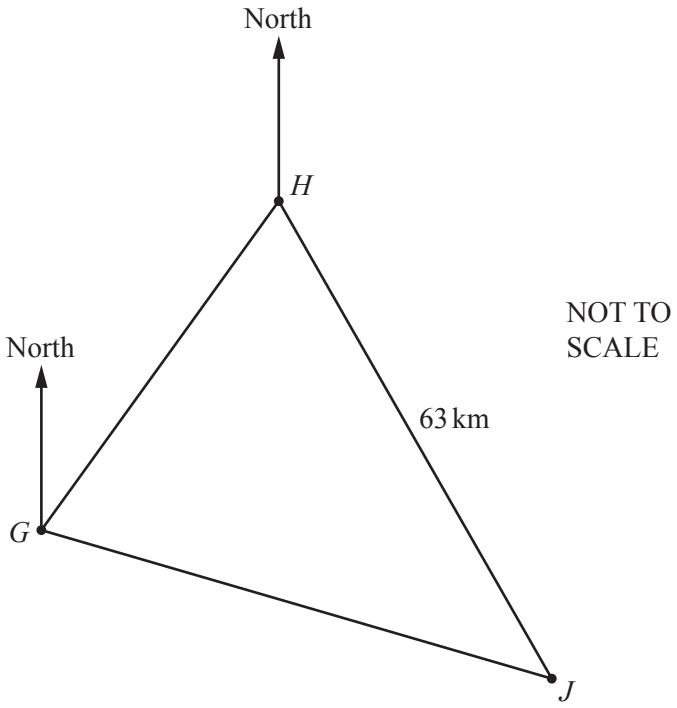


The diagram shows the positions of three small islands $G$, $H$ and $J$.
The bearing of $H$ from $G$ is 045°.
The bearing of $J$ from $G$ is 126°.
The bearing of $J$ from $H$ is 164°.
The distance $HJ$ is 63 km.

Calculate the distance $GJ$.

*Answer(b)* $GJ$ = ..... km [5]

© UCLES 2015

**8** **(a)** Jamil, Kiera and Luther collect badges.
Jamil has $x$ badges.
Kiera has 12 badges more than Jamil.
Luther has 3 times as many badges as Kiera.
Altogether they have 123 badges.

Form an equation and solve it to find the value of $x$.

View solution

*Answer(a)* $x =$ ..... [3]

**(b)** Find the integer values of $t$ which satisfy the inequalities.

View solution

$$4t + 7 < 39 \leqslant 7t + 2$$

*Answer(b)* ..... [3]

**(c)** Solve the following equations.

View solution

**(i)** $\dfrac{21 - x}{x + 3} = 4$

*Answer(c)*(i) $x =$ ..... [3]

© UCLES 2015

**(ii)** $3x^2 + 7x - 5 = 0$

Show all your working and give your answers correct to 2 decimal places.

View solution

*Answer(c)*(ii) $x$ = ..... or $x$ = ..... [4]

**9** **(a)** The points $A$, $B$, $C$ and $D$ lie on a circle.
$AC$ is a diameter of the circle.
$ST$ is the tangent to the circle at $A$.

View solution

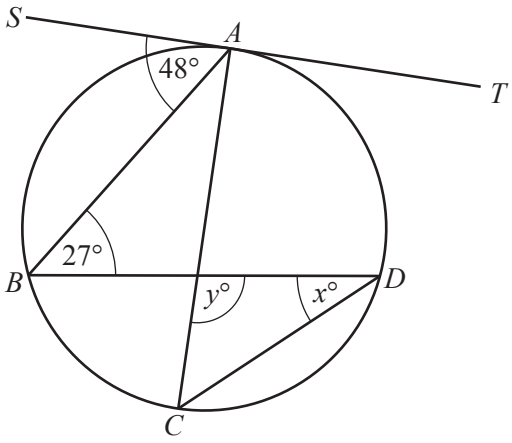


NOT TO SCALE

Find the value of

**(i)** $x$,

*Answer(a)*(i) $x$ = ..... [2]

**(ii)** $y$.

View solution

*Answer(a)*(ii) $y$ = ..... [2]

**(b)** The diagram shows a shaded shape formed by three semi-circular arcs.
The radius of each semi-circle is shown in the diagram.

View solution

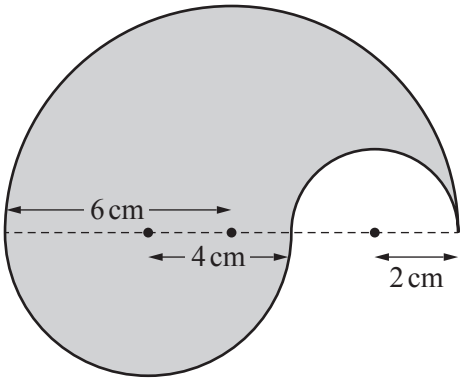


NOT TO SCALE

**(i)** Calculate the perimeter of the shaded shape.

*Answer(b)*(i) ..... cm [2]

View solution

**(ii)** The shaded shape is made from metal 1.6 mm thick.

Calculate the volume of metal used to make this shape.
Give your answer in cubic millimetres.

*Answer(b)*(ii) ..... $mm^3$ [5]

© UCLES 2015

**10** The diagram is a scale drawing of three straight roads, *AB*, *BC* and *CD*.
The scale is 1 : 5000.

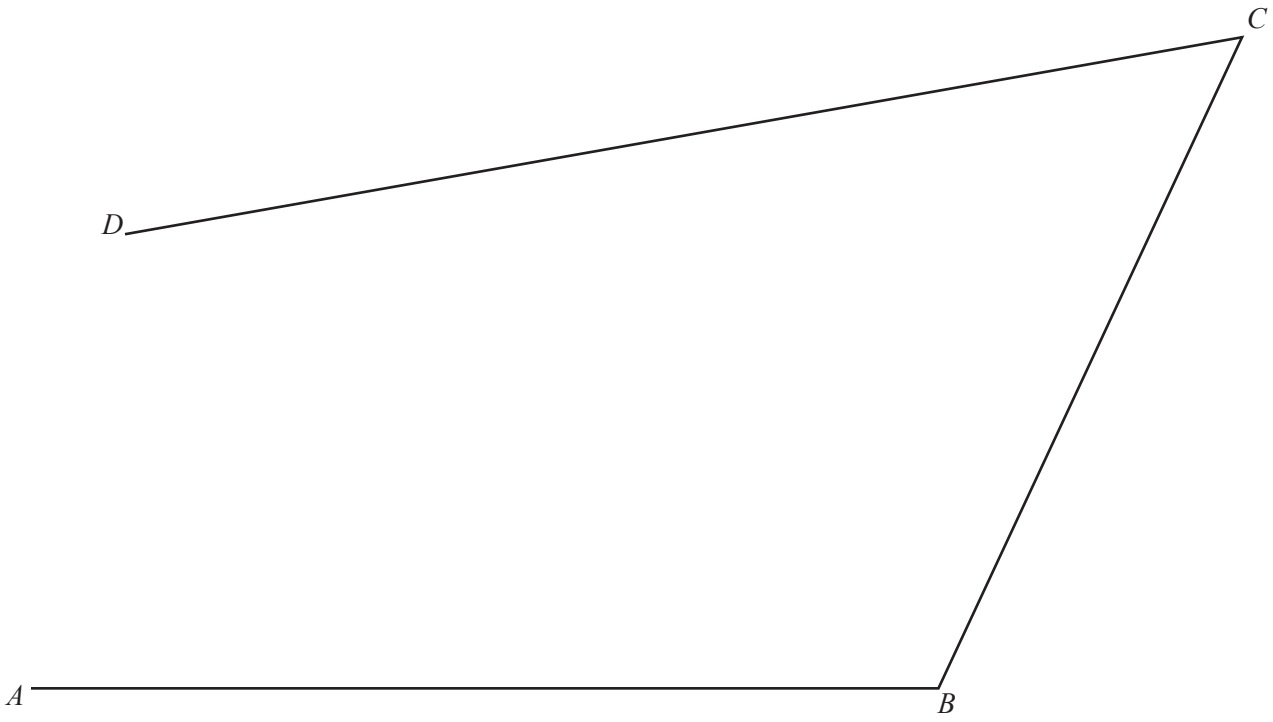


Scale 1 : 5000

**(a)** Find the actual length of the road *BC*.
Give your answer in metres.

View solution

*Answer(a)* ..... m [2]

**(b)** Another straight road starts at *M*, the midpoint of *AB*.
This road is perpendicular to *AB* and it meets the road *CD* at *X*.

View solution

**Using a straight edge and compasses only**, construct *MX*. [2]

**(c)** There is a park in the area enclosed by the four roads.

View solution

The park is

- less than 290 m from $B$

and

- nearer to $CD$ than to $CB$.

**Using a ruler and compasses only**, construct the boundaries of the park.

Leave in all your construction arcs and label the park $P$. [5]

---

**Question 11 is printed on the next page.**

**11** **(a)** Make $x$ the subject of the formula.

$$A - x = \frac{xr}{t}$$

View solution

*Answer(a)* $x =$ ..... [4]

**(b)** Find the value of $a$ and the value of $b$ when $x^2 - 16x + a = (x + b)^2$.

View solution

*Answer(b)* $a =$ .....

$b =$ ..... [3]

**(c)** Write as a single fraction in its simplest form.

View solution

$$\frac{6}{x-4} - \frac{5}{3x-2}$$

*Answer(c)* ..... [3]

Permission to reproduce items where third-party owned material protected by copyright is included has been sought and cleared where possible. Every reasonable effort has been made by the publisher (UCLES) to trace copyright holders, but if any items requiring clearance have unwittingly been included, the publisher will be pleased to make amends at the earliest possible opportunity.

To avoid the issue of disclosure of answer-related information to candidates, all copyright acknowledgements are reproduced online in the Cambridge International Examinations Copyright Acknowledgements Booklet. This is produced for each series of examinations and is freely available to download at www.cie.org.uk after the live examination series.

Cambridge International Examinations is part of the Cambridge Assessment Group. Cambridge Assessment is the brand name of University of Cambridge Local Examinations Syndicate (UCLES), which is itself a department of the University of Cambridge.

© UCLES 2015