Cambridge IGCSE

Cambridge International Examinations
Cambridge International General Certificate of Secondary Education

CANDIDATE NAME									
CENTRE NUMBER						CANDIDATE NUMBER			

MATHEMATICS **0580/31**

Paper 3 (Core) **May/June 2016**

2 hours

Candidates answer on the Question Paper.

Additional Materials: Electronic calculator
Tracing paper (optional)
Geometrical instruments

READ THESE INSTRUCTIONS FIRST

Write your Centre number, candidate number and name on all the work you hand in.
Write in dark blue or black pen.
You may use an HB pencil for any diagrams or graphs.
Do not use staples, paper clips, glue or correction fluid.
DO **NOT** WRITE IN ANY BARCODES.

Answer **all** questions.
If working is needed for any question it must be shown below that question.
Electronic calculators should be used.
If the degree of accuracy is not specified in the question, and if the answer is not exact, give the answer to three significant figures. Give answers in degrees to one decimal place.
For π, use either your calculator value or 3.142.

At the end of the examination, fasten all your work securely together.
The number of marks is given in brackets [ ] at the end of each question or part question.
The total of the marks for this paper is 104.

The syllabus is approved for use in England, Wales and Northern Ireland as a Cambridge International Level 1/Level 2 Certificate.

© UCLES 2016

CAMBRIDGE International Examinations

1 Joel spins a fair five-sided spinner numbered 2, 3, 4, 5 and 6.

(a) Write down the probability that the spinner lands on

(i) an odd number,

..... [1]

(ii) a prime number,

..... [1]

(iii) the number 7.

..... [1]

(b) Here are the results of his first 20 spins.

Number	2	3	4	5	6
Frequency	3	2	6	4	5

(i) Write down the mode.

..... [1]

(ii) Calculate the mean.

..... [3]

(iii) Joel wants to draw a pie chart to show the results in the table.

(a) Show that the sector angle for the number 2 is 54°.

[1]

(b) Find the sector angle for the number 6.

..... [2]

© UCLES 2016

(c) Joel asks 30 students to guess the number that the spinner will next land on.
The results are shown in this pie chart.

View solution

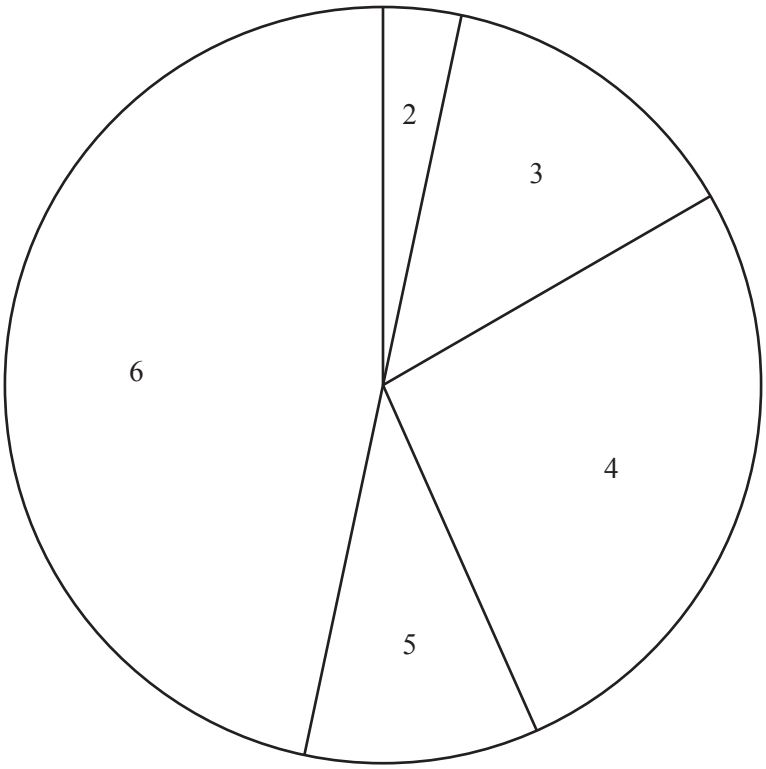

(i) The sector angle for the number 6 is 168°.

How many students guessed the number 6?

..... [2]

(ii) Find the percentage of the students who guessed a number **less than** 5.

View solution

.....% [3]

(iii) Joel spins the spinner.
10% of the 30 students guessed correctly.

View solution

Which number did the spinner land on?

..... [2]

© UCLES 2016

2 **(a)** 3 6 19 20 24 27 30 32 35 36 48 49 51

View solution

From this list of numbers write down

(i) a factor of 15,

..... [1]

(ii) a multiple of 18, View solution

..... [1]

(iii) an odd square number, View solution

..... [1]

(iv) a cube number. View solution

..... [1]

(b) Write as a percentage. View solution

(i) 0.43

.....% [1]

(ii) $\frac{1}{2}$ View solution

.....% [1]

(c) Write $\frac{28}{42}$ in its lowest terms. View solution

..... [1]

(d) **(i)** Write 45 as a product of its prime factors. View solution

..... [2]

(ii) Find the highest common factor (HCF) of 45 and 105. View solution

..... [2]

© UCLES 2016

3 Paul and Mary go on a 14 night cruise in the Mediterranean.

(a) The price of the cruise is \$237 per person per night.
A tax of 6% is added to this price.

Find the total amount Paul and Mary pay for this cruise.

View solution

\$..... [3]

(b) At a port Mary buys 2 bottles of sun cream.
Each bottle costs \$7.89 .

Work out the change she receives from \$20.

View solution

\$..... [2]

(c) Paul and Mary leave the ship at 0923 to tour Pisa.
The tour lasts for $6\frac{3}{4}$ hours.

Find the time when the tour finishes.

View solution

..... [2]

(d) The ship leaves at 1840 to sail to the next port.
It sails 270 km at an average speed of 32.4 km/h.

Find the time when the ship arrives.

View solution

..... [3]

(e) There are 1800 passengers on the ship.
They are in the ratio males : females = 5 : 4.

Work out the number of male passengers.

View solution

..... [2]

© UCLES 2016

4 **(a)** The table shows the temperature at noon each day for one week in a city.

View solution

Monday	Tuesday	Wednesday	Thursday	Friday	Saturday	Sunday
5 °C	2 °C	−3 °C	−1°C	0 °C	1°C	−2 °C

(i) Which day had the lowest noon temperature?

..... [1]

(ii) Find the difference between the noon temperatures on Tuesday and Wednesday.

View solution

.....°C [1]

(iii) Write these seven temperatures in order, starting with the lowest.

View solution

....., ..., ..., ..., ..., ..., ... [1]
lowest

(iv) On Sunday the noon temperature was −2 °C.
The next day the noon temperature fell by 4 °C.

View solution

Find the noon temperature on the next day.

.....°C [1]

(b) The number of houses in the city is 1 935 364.

View solution

Write this number correct to the nearest million.

..... [1]

(c) The height, h metres, of a tower in the city is 120 m, correct to the nearest 10 m.

View solution

Complete this statement about the value of h.

..... $\leqslant h <$ ..... [2]

© UCLES 2016

(d) The diagram shows the cross section of a circular tunnel in the city.

View solution

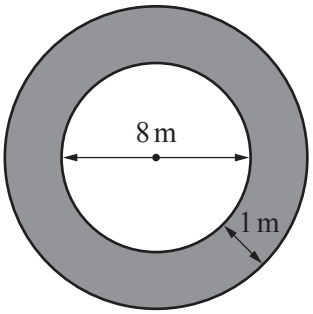

NOT TO SCALE

Calculate the shaded area.

..... m^2 [4]

© UCLES 2016

5 **(a)** The scale drawing shows port A and port B.
The scale is 1 centimetre represents 15 kilometres.

View solution

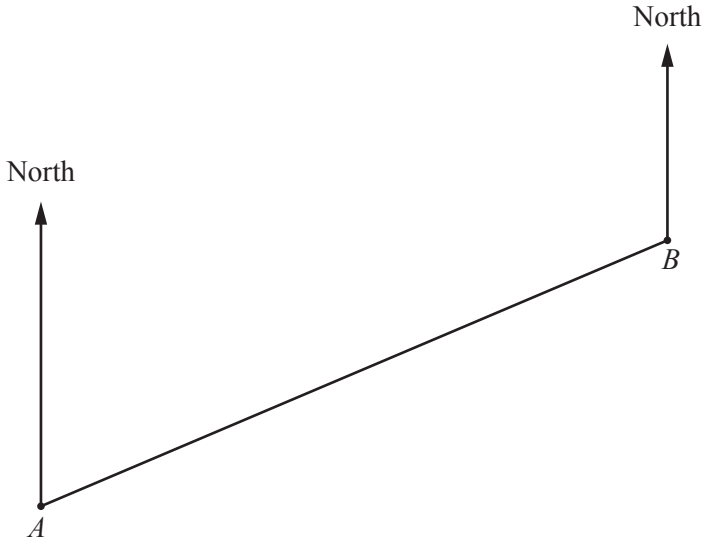

Scale: 1 cm to 15 km

A ship sails from port A to port B.

(i) Measure the bearing of port B from port A.

..... [1]

(ii) Find the actual distance from port A to port B.

View solution

..... km [2]

(iii) The ship then sails from port B to port C.
Port C is 90 km from port B on a bearing of 146°.

View solution

On the scale drawing mark the position of port C. [2]

© UCLES 2016

(b) Another ship sails from port P to port Q.
It then sails from port Q to port R before returning to port P.

View solution

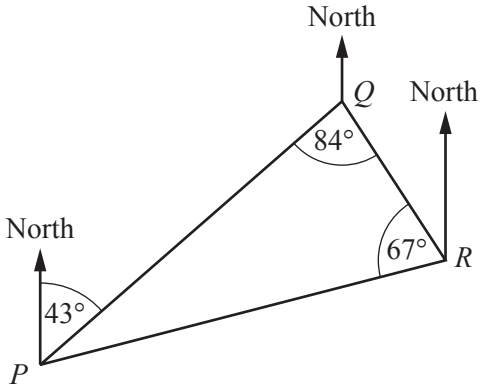

NOT TO SCALE

(i) Find angle RPQ.

Angle RPQ = ... [1]

(ii) Find the bearing of port P from port R.

View solution

..... [2]

(c)

View solution

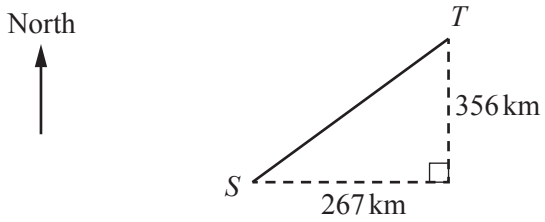

NOT TO SCALE

Port T is 267 km east and 356 km north of port S.

Calculate the distance ST.

ST = ... km [2]

6 **(a)** Solve these equations.

(i) $x + 7 = 15$

View solution

$x =$ ..... [1]

(ii) $5(3x + 8) = 10$

View solution

$x =$ ..... [3]

View solution

(b) A club is arranging transport for its members.

Speedy Coaches charge \$625 plus \$15 per member.

The total cost, in dollars, for x members is given by the expression $15x + 625$.

(i) Sporty Coaches charge \$117 plus \$19 per member.

Write an expression for the total cost, in dollars, for x members.

..... [2]

(ii) The total cost is the same for both Speedy Coaches and Sporty Coaches.

View solution

Write down an equation and solve it to find x.

$x =$ ..... [3]

© UCLES 2016

7

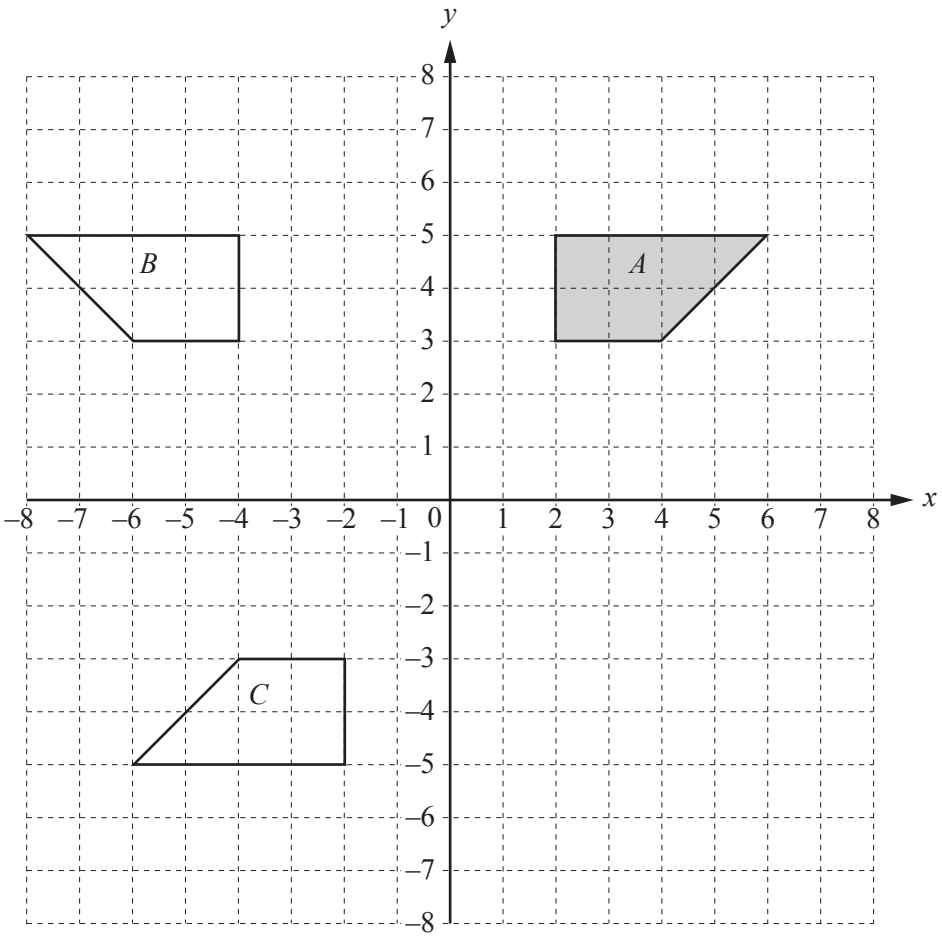

View solution

(a) On the grid, draw the image of shape A after a translation by the vector $\begin{pmatrix} -2 \\ -6 \end{pmatrix}$. [2]

(b) **(i)** On the grid, draw the image of shape A after an enlargement, scale factor 2, centre (4, 4). [2]

View solution

(ii) Write down the scale factor of the enlargement that maps the image in **part (b)(i)** back onto shape A.

..... [1]

(c) Describe fully the **single** transformation that maps shape A onto shape B.

View solution

.....

..... [2]

(d) Describe fully the **single** transformation that maps shape A onto shape C.

View solution

.....

..... [3]

© UCLES 2016

8 Jared is building a house.

(a)

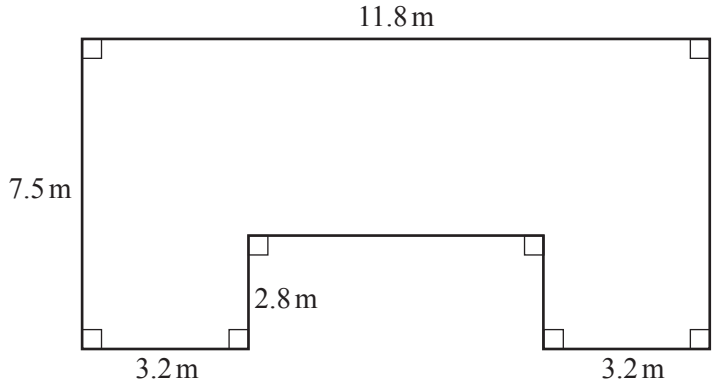

NOT TO SCALE

The diagram shows the plan of the floor of the house.

(i) Find the area of the floor.

..... m^2 [3]

(ii) For every square metre of floor area, it costs \$2175 to build the house.

Calculate the cost of building the house.
Give your answer correct to 3 significant figures.

\$..... [2]

(b)

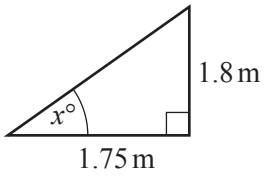

NOT TO SCALE

The diagram shows a section of the roof.

Using trigonometry, calculate the value of x.

x = ... [2]

© UCLES 2016

(c) Jared invests \$50 000 for three years at a rate of 2% per year compound interest.

View solution

Calculate the total amount Jared receives at the end of the three years.

\$..... [3]

(d) Jared also built an apartment for \$180 000.
He sells it for \$198 000.

View solution

Calculate the percentage profit that he makes.

.....% [3]

© UCLES 2016

9 **(a)** Complete the table of values for $y = 8 + 7x - x^2$.

View solution

x	0	1	2	3	4	5	6	7	8
y	8		18			18		8	

[3]

(b) On the grid, draw the graph of $y = 8 + 7x - x^2$ for $0 \leqslant x \leqslant 8$.

View solution

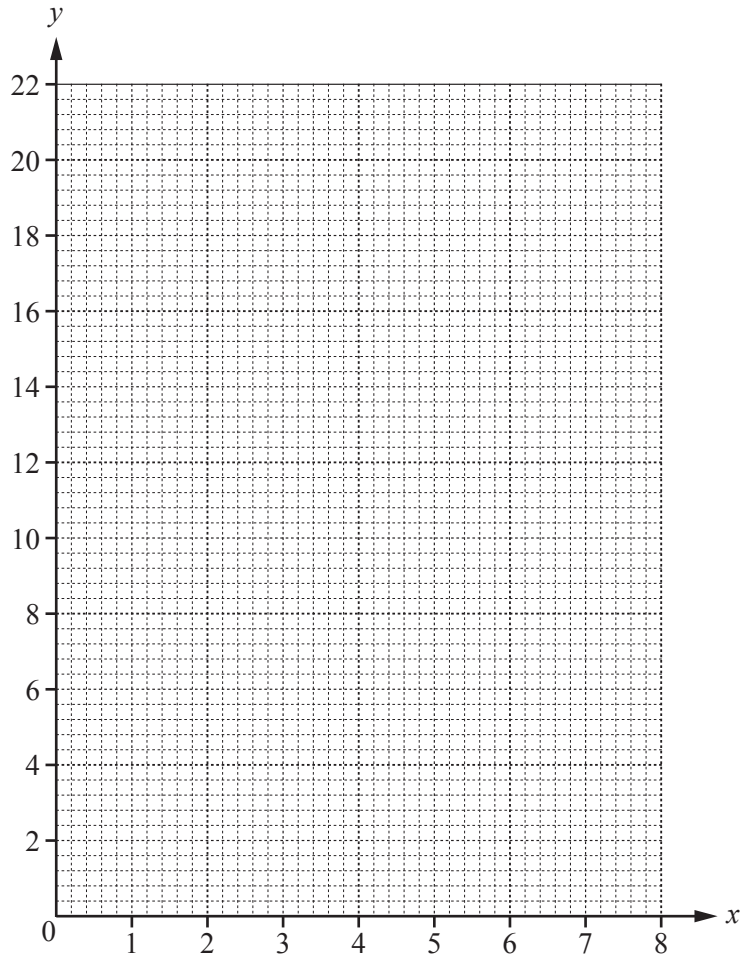

[4]

(c) Write down the co-ordinates of the highest point of the curve.

View solution

(..... , ...) [1]

(d) **(i)** On the grid, draw the line $y = 16$. [1]

(ii) Use your line to solve the equation $8 + 7x - x^2 = 16$.

View solution

x = ... or x = ... [2]

© UCLES 2016

BLANK PAGE

Permission to reproduce items where third-party owned material protected by copyright is included has been sought and cleared where possible. Every reasonable effort has been made by the publisher (UCLES) to trace copyright holders, but if any items requiring clearance have unwittingly been included, the publisher will be pleased to make amends at the earliest possible opportunity.

To avoid the issue of disclosure of answer-related information to candidates, all copyright acknowledgements are reproduced online in the Cambridge International Examinations Copyright Acknowledgements Booklet. This is produced for each series of examinations and is freely available to download at www.cie.org.uk after the live examination series.

Cambridge International Examinations is part of the Cambridge Assessment Group. Cambridge Assessment is the brand name of University of Cambridge Local Examinations Syndicate (UCLES), which is itself a department of the University of Cambridge.