Cambridge IGCSE

**Cambridge International Examinations**
Cambridge International General Certificate of Secondary Education

| | | | | | | | | | |
|---|---|---|---|---|---|---|---|---|---|
| CANDIDATE NAME | | | | | | | | | |
| CENTRE NUMBER | | | | | | CANDIDATE NUMBER | | | |

**MATHEMATICS** **0580/21**

Paper 2 (Extended) **May/June 2017**

**1 hour 30 minutes**

Candidates answer on the Question Paper.

Additional Materials: Electronic calculator
Tracing paper (optional)
Geometrical instruments

**READ THESE INSTRUCTIONS FIRST**

Write your Centre number, candidate number and name on all the work you hand in.
Write in dark blue or black pen.
You may use an HB pencil for any diagrams or graphs.
Do not use staples, paper clips, glue or correction fluid.
DO **NOT** WRITE IN ANY BARCODES.

Answer **all** questions.
If working is needed for any question it must be shown below that question.
Electronic calculators should be used.
If the degree of accuracy is not specified in the question, and if the answer is not exact, give the answer to three significant figures. Give answers in degrees to one decimal place.
For $\pi$, use either your calculator value or 3.142.

At the end of the examination, fasten all your work securely together.
The number of marks is given in brackets [ ] at the end of each question or part question.
The total of the marks for this paper is 70.



© UCLES 2017

CAMBRIDGE International Examinations

**1** Simplify.

$(x^2)^5$

View solution

..... [1]

**2** The thickness of one sheet of paper is $8 \times 10^{-3}$ cm.

View solution

Work out the thickness of 250 sheets of paper.

..... cm [1]

**3** Write 23.4571 correct to

**(a)** 4 significant figures,

View solution

..... [1]

**(b)** the nearest 10.

View solution

..... [1]

**4** The table shows the temperatures in five places at 10 am one day in January.

| Place | Temperature (°C) |
|---|---|
| Helsinki | −7 |
| Chicago | −10 |
| London | 3 |
| Moscow | −4 |
| Bangkok | 26 |

**(a)** Which place was the coldest?

View solution

..... [1]

**(b)** At 2 pm the temperature in Helsinki had increased by 4 °C.

View solution

Write down the temperature in Helsinki at 2 pm.

..... °C [1]

© UCLES 2017

**5** Factorise completely.

$$12n^2 - 4mn$$

View solution

..... [2]

**6** **(a)** $2^r = \frac{1}{16}$

View solution

Find the value of $r$.

$r =$ ..... [1]

**(b)** $3^t = \sqrt[5]{3}$

View solution

Find the value of $t$.

$t =$ ..... [1]

**7** **Without using a calculator**, work out $1\frac{2}{3} + \frac{5}{7}$.

View solution

Write down all the steps of your working and give your answer as a mixed number in its simplest form.

..... [3]

© UCLES 2017

**8** Simon has two boxes of cards.
In one box, each card has one shape drawn on it that is either a triangle or a square.
In the other box, each card is coloured either red or blue.

View solution

Simon picks a card from each box at random.
The probability of picking a triangle card is $t$.
The probability of picking a red card is $r$.

Complete the table for the cards that Simon picks, writing each probability in terms of $r$ and $t$.

| Event | Probability |
|---|---|
| Triangle and red | |
| Square and red | $(1 - t)r$ |
| Triangle and blue | |
| Square and blue | |

[3]

**9** $h$ is directly proportional to the square root of $p$.
$h = 5.4$ when $p = 1.44$ .

View solution

Find $h$ when $p = 2.89$ .

$h =$ ..... [3]

**10**

View solution

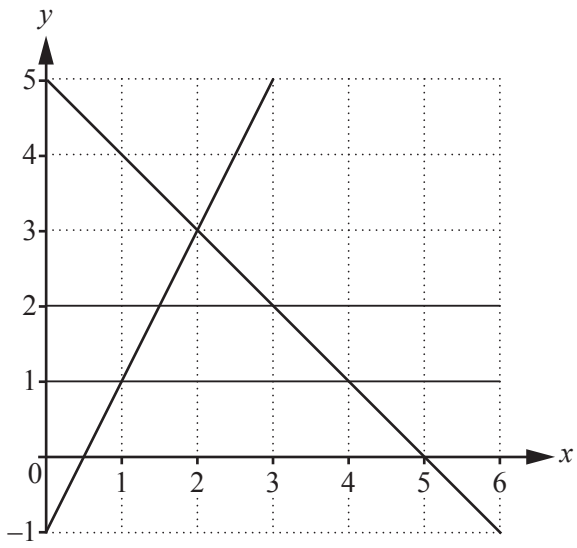


By shading the **unwanted** regions of the grid, find and label the region $R$ that satisfies the following four inequalities.

$y \leqslant 2$ $y \geqslant 1$ $y \leqslant 2x - 1$ $y \leqslant 5 - x$ [3]

**11** The two barrels in the diagram are mathematically similar.

View solution

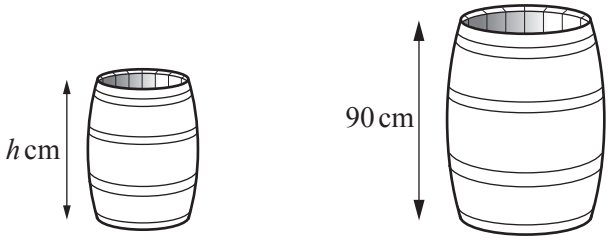


NOT TO SCALE

The smaller barrel has a height of $h$ cm and a capacity of 100 litres.
The larger barrel has a height of 90 cm and a capacity of 160 litres.

Work out the value of $h$.

$h =$ ..... [3]

**12** A line has gradient 5.
*M* and *N* are two points on this line.
*M* is the point $(x, 8)$ and *N* is the point $(k, 23)$.

View solution

Find an expression for $x$ in terms of $k$.

$x =$ ..... [3]

**13**

View solution

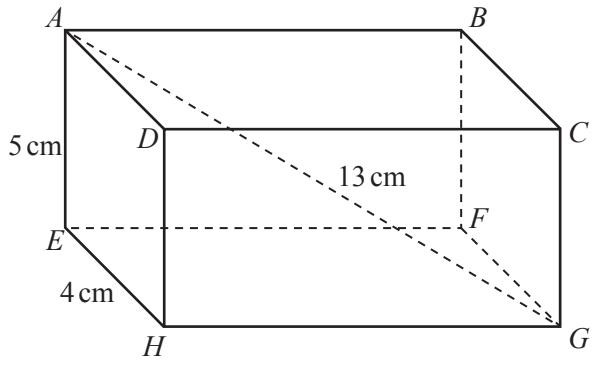


NOT TO SCALE

The diagram shows a cuboid *ABCDEFGH*.
$AE = 5$ cm, $EH = 4$ cm and $AG = 13$ cm.

Calculate the angle between the line *AG* and the base *EFGH* of the cuboid.

..... [3]

© UCLES 2017

**14** The diagram shows a regular octagon joined to an equilateral triangle.

View solution

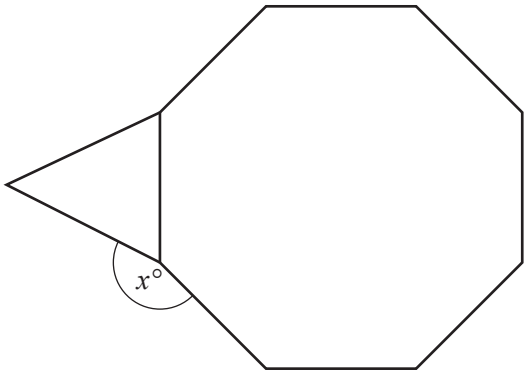


NOT TO SCALE

Work out the value of $x$.

$x =$ ..... [3]

**15** The diagram shows information about the first 100 seconds of a car journey.

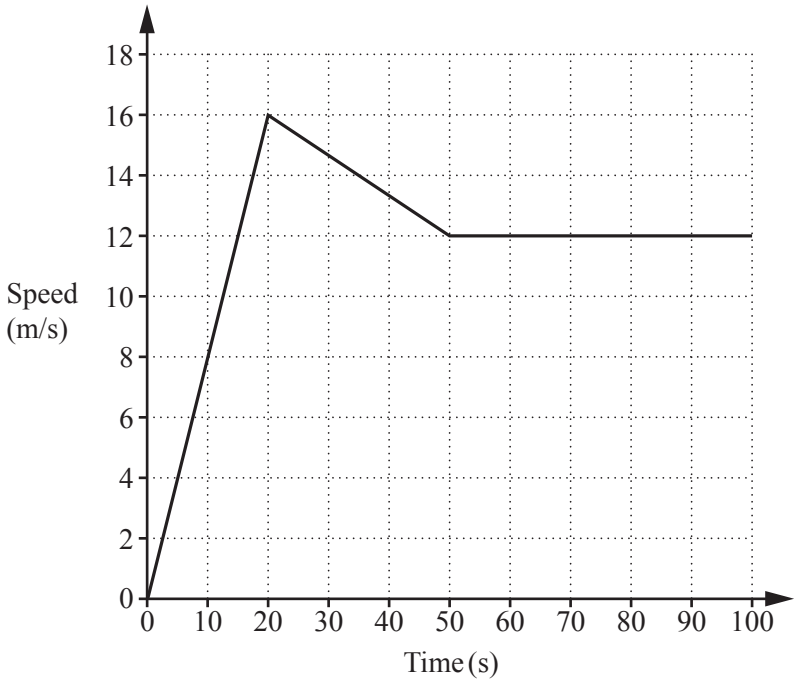


**(a)** Calculate the acceleration during the first 20 seconds of the journey.

View solution

.....m/s$^2$ [1]

**(b)** Work out the total distance travelled by the car in the 100 seconds.

View solution

.....m [3]

© UCLES 2017

**16** Six students revise for a test.
The scatter diagram shows the time, in hours, each student spent revising and their mark in the test.

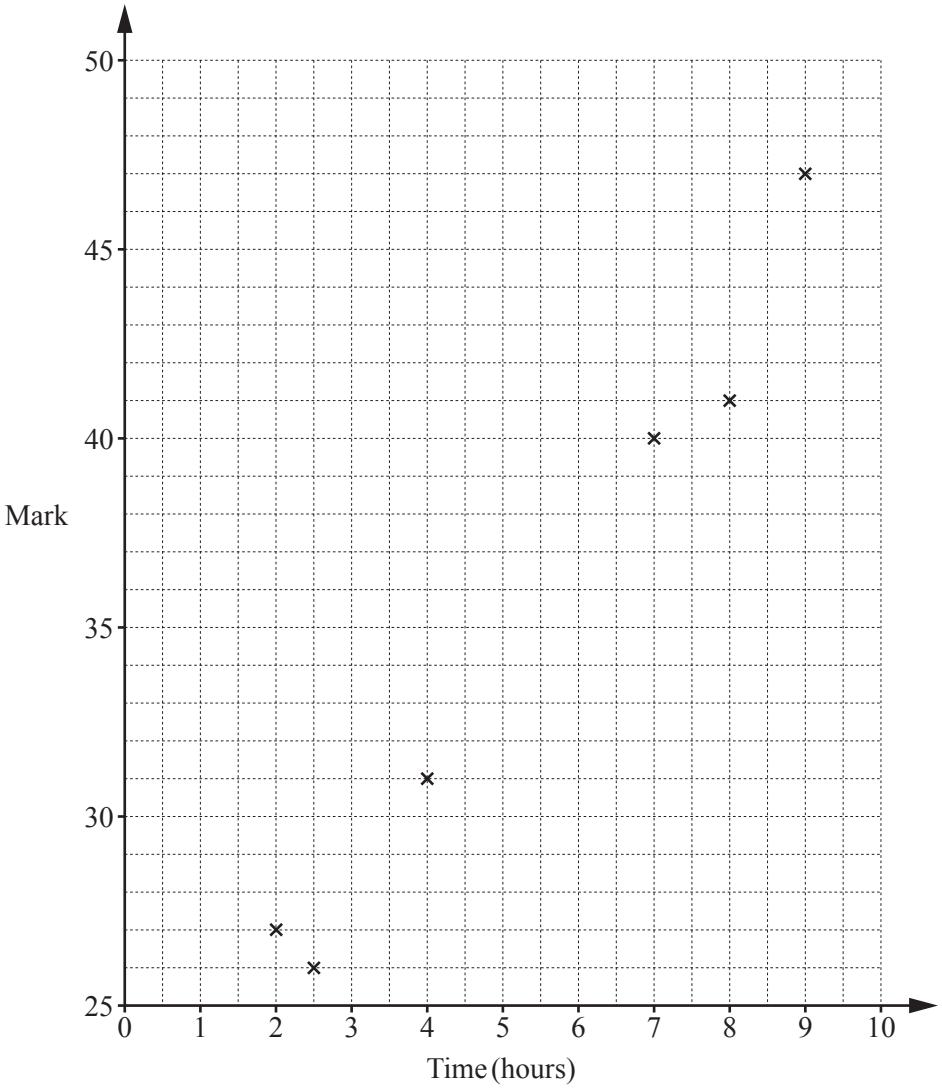


View solution

**(a)** The data for two more students is shown in the table.

| Time (hours) | 4.5 | 6.5 |
|---|---|---|
| Mark | 33 | 35 |

Plot these two points on the scatter diagram. [1]

View solution

**(b)** What type of correlation is shown on the scatter diagram?

..... [1]

View solution

**(c)** Draw a line of best fit on the scatter diagram. [1]

View solution

**(d)** Another student spent 5.5 hours revising.

Estimate a mark for this student.

..... [1]

© UCLES 2017

**17** **(a)** In this Venn diagram, shade the region $F \cup G'$.

View solution

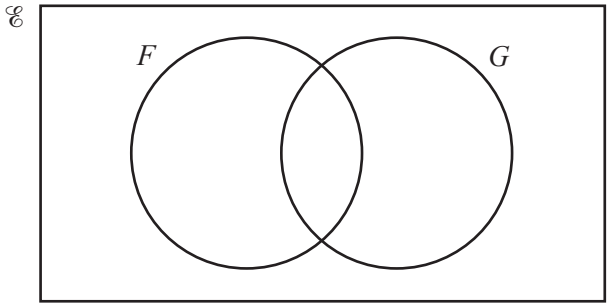


[1]

**(b)** $\mathscr{E} = \{1, 2, 3, 4, 5, 6, 7, 8, 9\}$
$A = \{x: x \text{ is an odd number}\}$
$B = \{x: x \text{ is a square number}\}$
$C = \{x: x \text{ is a multiple of } 3\}$

View solution

**(i)** Write all the elements of $\mathscr{E}$ in the Venn diagram below.

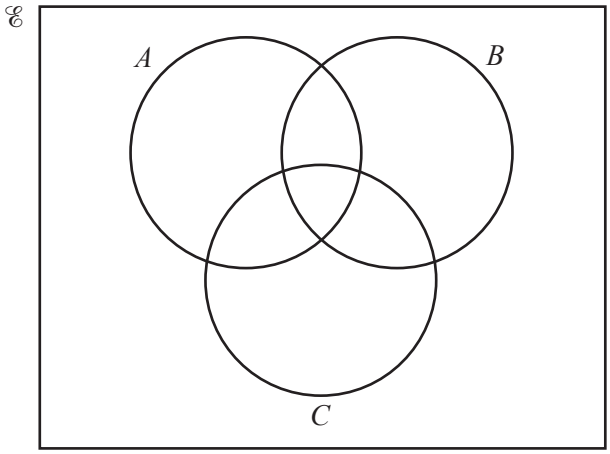


[2]

**(ii)** Another number is included in the set $\mathscr{E}$.
This number is in the region $A' \cap B \cap C$.

View solution

Write down a possible value for this number.

..... [1]

**18** The diagram shows a parallelogram *OCEG*.

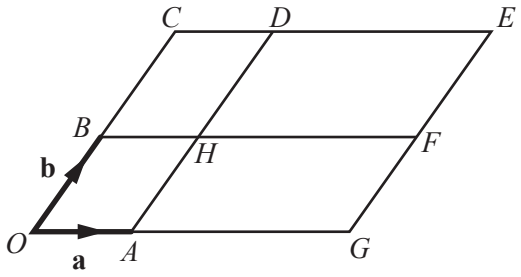


NOT TO SCALE

*O* is the origin, $\overrightarrow{OA} = \mathbf{a}$ and $\overrightarrow{OB} = \mathbf{b}$.
*BHF* and *AHD* are straight lines parallel to the sides of the parallelogram.
$\overrightarrow{OG} = 3\overrightarrow{OA}$ and $\overrightarrow{OC} = 2\overrightarrow{OB}$.

**(a)** Write the vector $\overrightarrow{HE}$ in terms of **a** and **b**.

View solution

$\overrightarrow{HE} =$ ..... [1]

**(b)** Complete this statement.

View solution

**a** + 2**b** is the position vector of point ..... [1]

**(c)** Write down two vectors that can be written as 3**a** − **b**.

View solution

..... and ..... [2]

**19** *ABCD* is a rhombus with side length 10 cm.

View solution

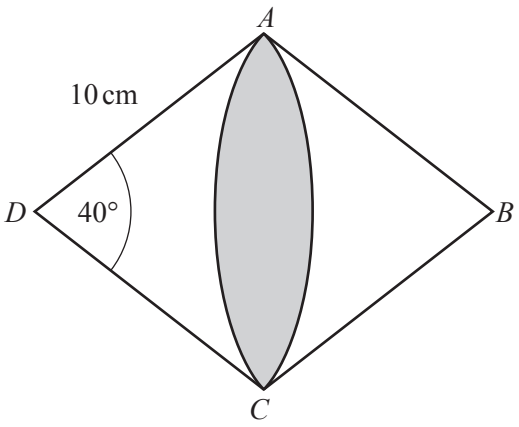


NOT TO SCALE

Angle $ADC = 40°$.
*DAC* is a sector of a circle with centre *D*.
*BAC* is a sector of a circle with centre *B*.

Calculate the shaded area.

..... $cm^2$ [4]

© UCLES 2017

**20** The diagram shows a fair spinner.

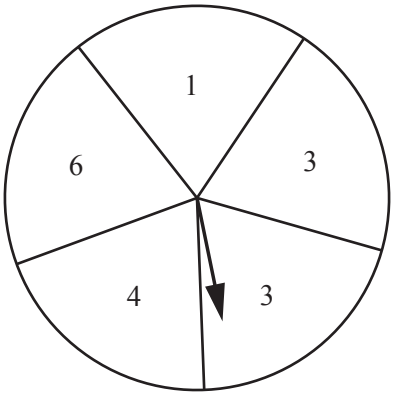


Anna spins it twice and adds the scores.

**(a)** Complete the table for the total scores.

View solution

| | | Score on first spin | | | | |
|---|---|---|---|---|---|---|
| | | 1 | 3 | 3 | 4 | 6 |
| Score on second spin | 1 | 2 | 4 | 4 | 5 | 7 |
| | 3 | 4 | 6 | 6 | 7 | 9 |
| | 3 | 4 | 6 | 6 | 7 | 9 |
| | 4 | | | | | |
| | 6 | | | | | |

[1]

**(b)** Write down the most likely total score.

View solution

..... [1]

**(c)** Find the probability that Anna scores

View solution

**(i)** a total less than 6,

..... [2]

**(ii)** a total of 3.

..... [1]

View solution

**21 (a)**

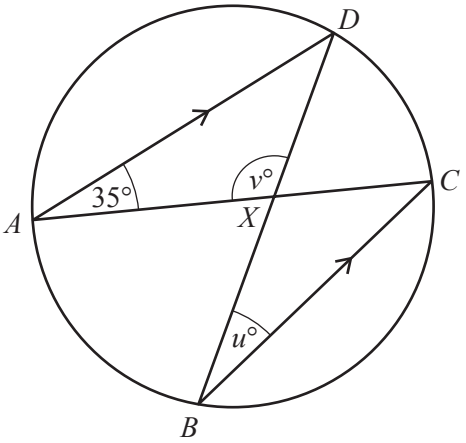


NOT TO SCALE

View solution

*A*, *B*, *C* and *D* are points on the circle.
*AD* is parallel to *BC*.
The chords *AC* and *BD* intersect at *X*.

Find the value of *u* and the value of *v*.

*u* = .....

*v* = ..... [3]

**(b)**

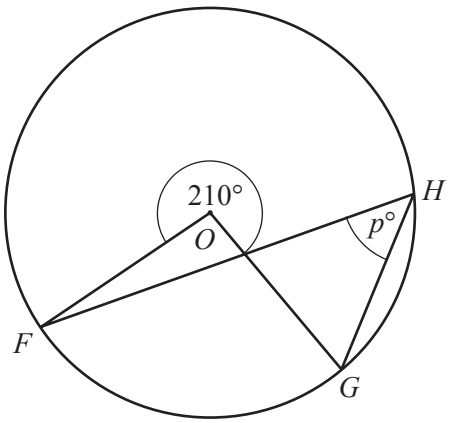


NOT TO SCALE

View solution

*F*, *G* and *H* are points on the circle, centre *O*.

Find the value of *p*.

*p* = ..... [2]

© UCLES 2017

**22** Write as a single fraction in its simplest form.

**(a)** $\dfrac{x^2-3x}{x^2-9}$

View solution

..... [3]

**(b)** $\dfrac{3}{x-4}+\dfrac{2}{2x+5}$

View solution

..... [3]

**BLANK PAGE**

Permission to reproduce items where third-party owned material protected by copyright is included has been sought and cleared where possible. Every reasonable effort has been made by the publisher (UCLES) to trace copyright holders, but if any items requiring clearance have unwittingly been included, the publisher will be pleased to make amends at the earliest possible opportunity.

To avoid the issue of disclosure of answer-related information to candidates, all copyright acknowledgements are reproduced online in the Cambridge International Examinations Copyright Acknowledgements Booklet. This is produced for each series of examinations and is freely available to download at www.cie.org.uk after the live examination series.

Cambridge International Examinations is part of the Cambridge Assessment Group. Cambridge Assessment is the brand name of University of Cambridge Local Examinations Syndicate (UCLES), which is itself a department of the University of Cambridge.