Cambridge IGCSE

Cambridge International Examinations
Cambridge International General Certificate of Secondary Education

CANDIDATE NAME									
CENTRE NUMBER						CANDIDATE NUMBER				

MATHEMATICS **0580/43**

Paper 4 (Extended) **May/June 2017**

2 hours 30 minutes

Candidates answer on the Question Paper.

Additional Materials: Electronic calculator
Geometrical instruments
Tracing paper (optional).

READ THESE INSTRUCTIONS FIRST

Write your Centre number, candidate number and name on all the work you hand in.
Write in dark blue or black pen.
You may use an HB pencil for any diagrams or graphs.
Do not use staples, paper clips, glue or correction fluid.
DO **NOT** WRITE IN ANY BARCODES.

Answer **all** questions.
If working is needed for any question it must be shown below that question.
Electronic calculators should be used.
If the degree of accuracy is not specified in the question, and if the answer is not exact, give the answer to three significant figures. Give answers in degrees to one decimal place.
For π, use either your calculator value or 3.142.

At the end of the examination, fasten all your work securely together.
The number of marks is given in brackets [ ] at the end of each question or part question.
The total of the marks for this paper is 130.

This document consists of **19** printed pages and **1** blank page.

© UCLES 2017

1 **(a)** In 2016, a company sold 9600 cars, correct to the nearest hundred.

View solution

(i) Write down the lower bound for the number of cars sold.

..... [1]

View solution

(ii) The average profit on each car sold was $2430, correct to the nearest $10.

Calculate the lower bound for the total profit.
Write down the exact answer.

$..... [2]

View solution

(iii) Write your answer to **part (a)(ii)** correct to 4 significant figures.

$..... [1]

View solution

(iv) Write your answer to **part (a)(iii)** in standard form.

$..... [1]

View solution

(b) In April, the number of cars sold was 546.
This was an increase of 5% on the number of cars sold in March.

Calculate the number of cars sold in March.

..... [3]

© UCLES 2017

(c) The price of a new car grows exponentially by 3% per year.
A new car has a price of $3000 in 2013.

View solution

Find the price of a new car 4 years later.

$..... [2]

2 (a)

View solution

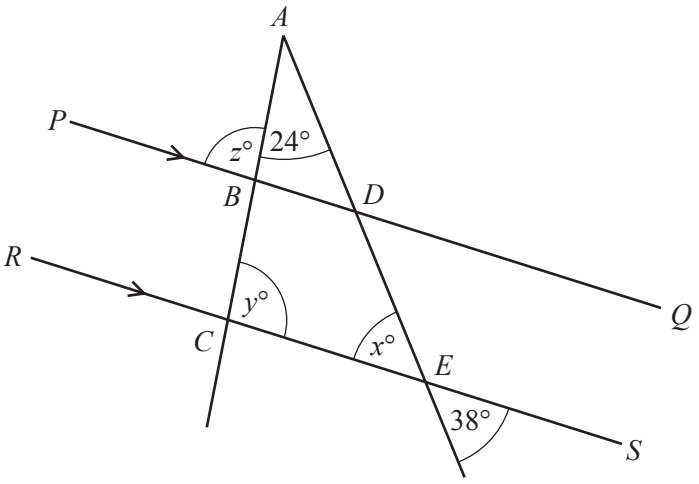

NOT TO SCALE

PQ is parallel to *RS*.
ABC and *ADE* are straight lines.

Find the values of x, y and z.

x = ...

y = ...

z = ... [3]

(b)

View solution

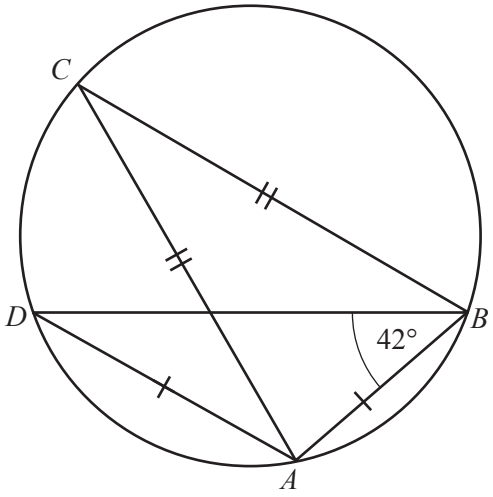

NOT TO SCALE

The points *A*, *B*, *C* and *D* lie on the circumference of the circle.
$AB = AD$, $AC = BC$ and angle $ABD = 42°$.

Find angle *CAB*.

Angle *CAB* = ... [3]

(c)

View solution

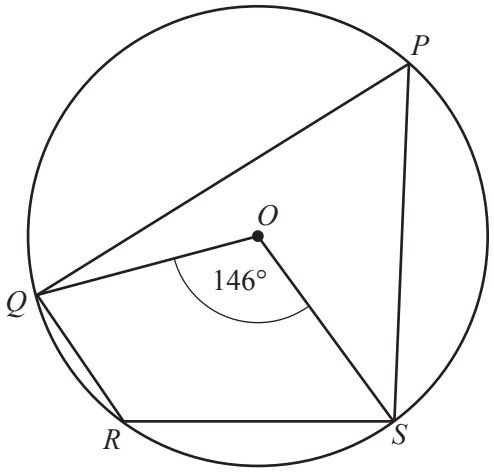

NOT TO SCALE

The points P, Q, R and S lie on the circumference of the circle, centre O.
Angle $QOS = 146°$.

Find angle QRS.

Angle QRS = ... [2]

© UCLES 2017

3 The table shows some values for $y = 2x^3 + 4x^2$.

x	–2.2	–2	–1.5	–1	–0.5	0	0.5	0.8
y	–1.94				0.75	0		3.58

View solution

(a) Complete the table. [4]

View solution

(b) Draw the graph of $y = 2x^3 + 4x^2$ for $-2.2 \leqslant x \leqslant 0.8$.

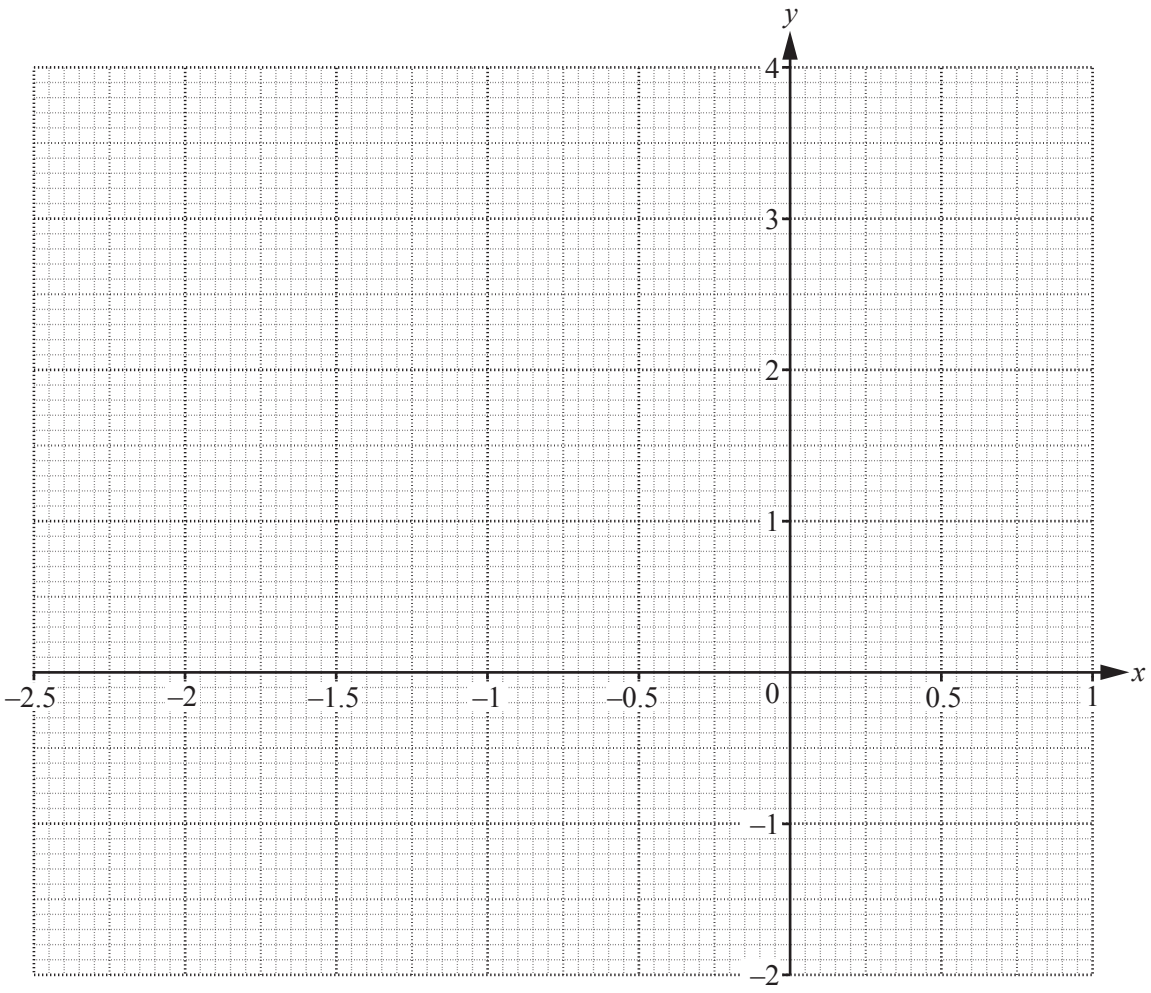

[4]

(c) Find the number of solutions to the equation $2x^3 + 4x^2 = 3$.

View solution

..... [1]

(d) **(i)** The equation $2x^3 + 4x^2 - x = 1$ can be solved by drawing a straight line on the grid.

View solution

Write down the equation of this straight line.

$y =$ ..... [1]

(ii) Use your graph to solve the equation $2x^3 + 4x^2 - x = 1$.

View solution

$x =$ ..... or $x =$ ..... or $x =$ .....[3]

(e) The tangent to the graph of $y = 2x^3 + 4x^2$ has a negative gradient when $x = k$.

View solution

Complete the inequality for k.

..... $< k <$ .....[2]

© UCLES 2017

4 **(a)** The diagram shows a solid metal prism with cross section *ABCDE*.

View solution

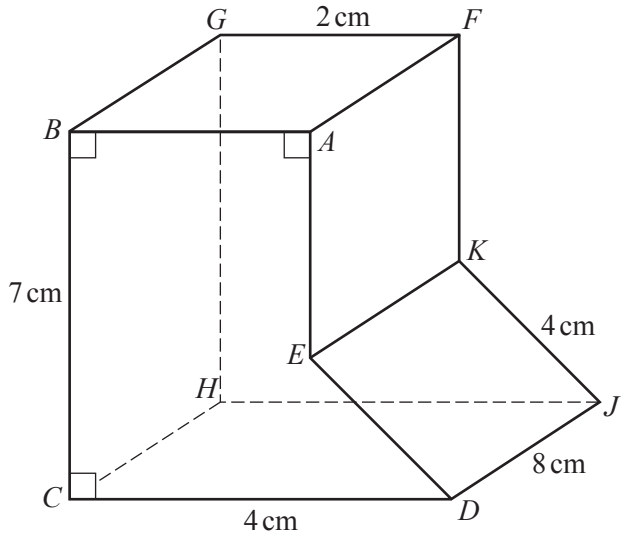

(i) Calculate the area of the cross section *ABCDE*.

.....cm^2 [6]

(ii) The prism is of length 8 cm.

View solution

Calculate the volume of the prism.

.....cm^3 [1]

© UCLES 2017

(b) A cylinder of length 13 cm has volume 280 cm^3.

View solution

(i) Calculate the radius of the cylinder.

..... cm [3]

View solution

(ii) The cylinder is placed in a box that is a cube of side 14 cm.

Calculate the percentage of the volume of the box that is occupied by the cylinder.

.....% [3]

© UCLES 2017

5 **(a)** Haroon has 200 letters to post.
The histogram shows information about the masses, m grams, of the letters.

View solution

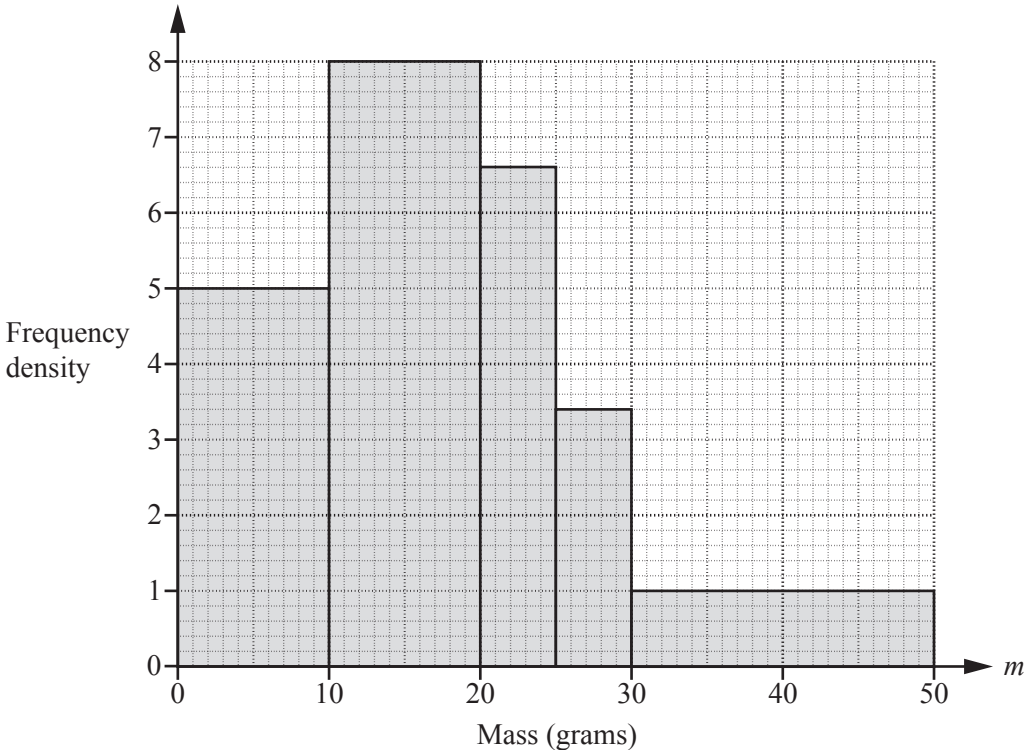

(i) Complete the frequency table for the 200 letters.

Mass (m grams)	$0 < m \leqslant 10$	$10 < m \leqslant 20$	$20 < m \leqslant 25$	$25 < m \leqslant 30$	$30 < m \leqslant 50$
Frequency	50			17	

[3]

(ii) Calculate an estimate of the mean mass.

View solution

..... g [4]

(b) Haroon has 15 parcels to post.
The table shows information about the sizes of these parcels.

View solution

Size	Small	Large
Frequency	9	6

Two parcels are selected at random.

Find the probability that

(i) both parcels are large,

..... [2]

(ii) one parcel is small and the other is large.

View solution

..... [3]

(c) The probability that a parcel arrives late is $\frac{3}{80}$.
4000 parcels are posted.

View solution

Calculate an estimate of the number of parcels expected to arrive late.

..... [1]

© UCLES 2017

6

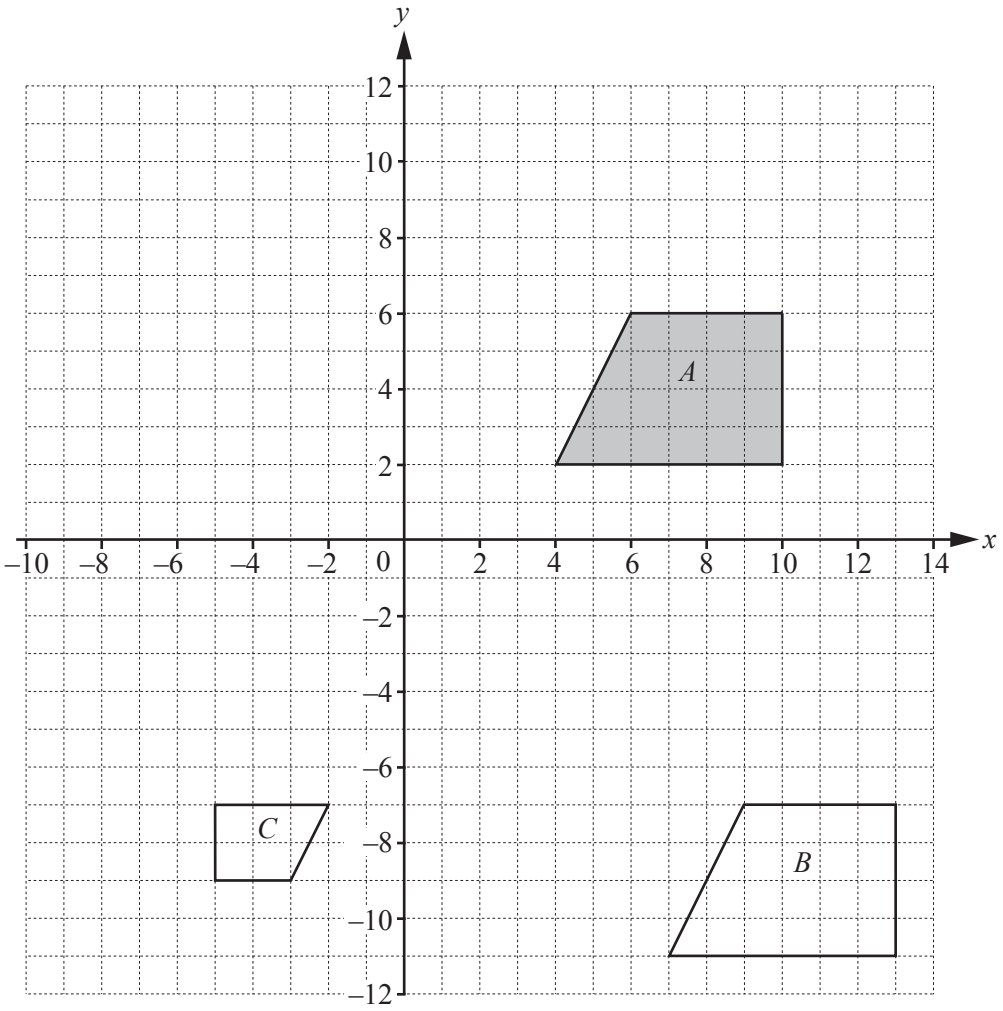

(a) Describe fully the **single** transformation that maps shape *A* onto

View solution

(i) shape *B*,

.....

..... [2]

(ii) shape *C*.

View solution

.....

..... [3]

(b) Draw the image of shape *A* after rotation through 90° anticlockwise about the point (3, −1). [2]

(c) Draw the image of shape *A* after reflection in $y = 1$. View solution [2]

(d) Describe fully the **single** transformation represented by the matrix $\begin{pmatrix} 3 & 0 \\ 0 & 3 \end{pmatrix}$.

View solution

.....

..... [3]

7 **(a)** Solve the simultaneous equations.
You must show all your working.

View solution

$$2x + 3y = 11$$
$$3x - 5y = -50$$

$x =$ .....

$y =$ ..... [4]

(b) $x^2 - 12x + a = (x + b)^2$

View solution

Find the value of a and the value of b.

$a =$ .....

$b =$ ..... [3]

(c) Write as a single fraction in its simplest form.

View solution

$$\frac{x}{2x-5} + \frac{3x+2}{x-1}$$

..... [4]

© UCLES 2017

8 **(a)** The table shows the marks gained by 10 students in their physics test and their mathematics test.

View solution

Physics mark	63	61	14	27	72	75	44	40	28	50
Mathematics mark	52	80	16	36	79	75	51	35	24	63

(i) Complete the scatter diagram below.
The first six points have been plotted for you.

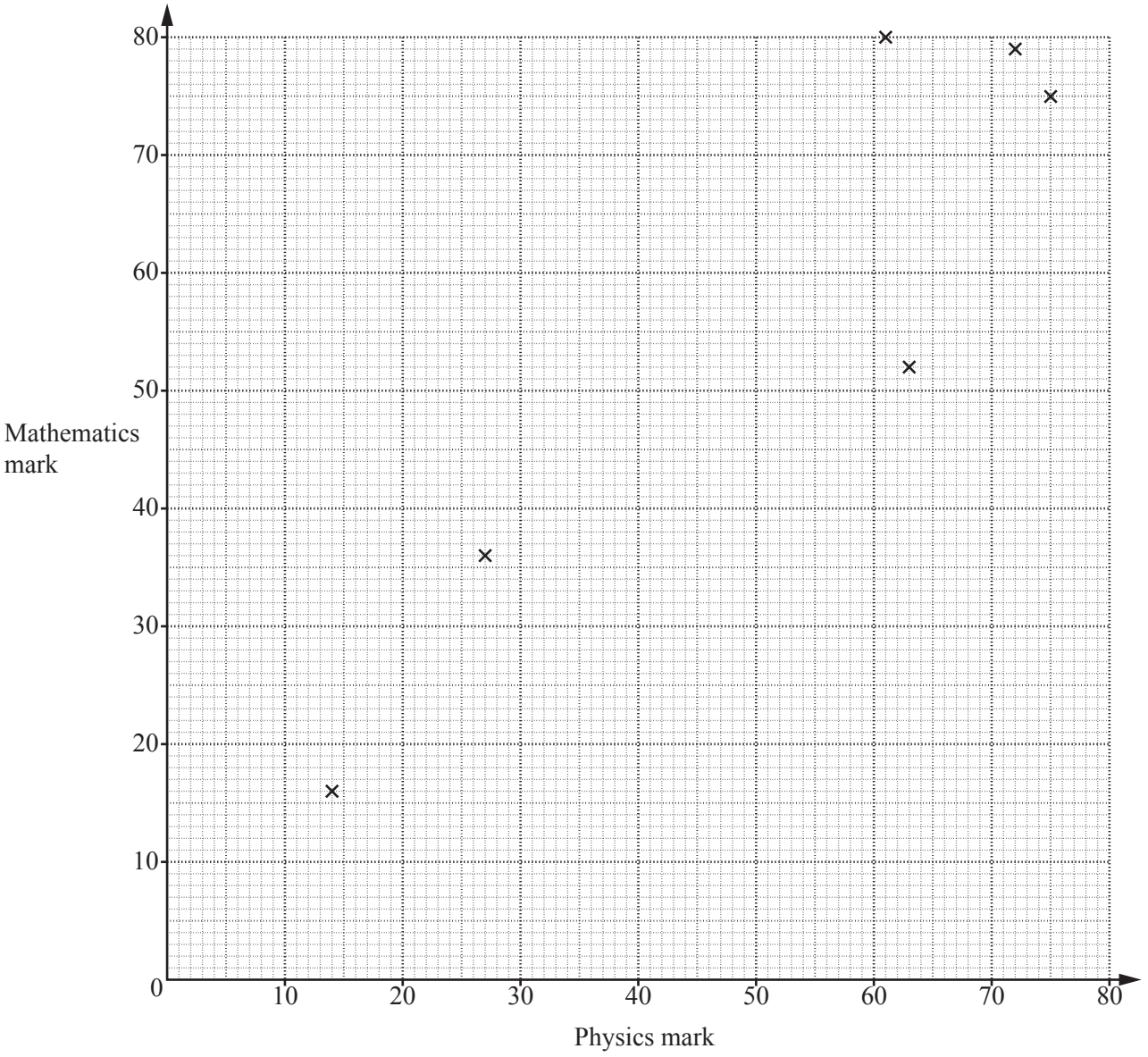

[2]

(ii) What type of correlation is shown in the scatter diagram?

View solution

..... [1]

(b) The marks of 30 students in a spelling test are shown in the table below.

View solution

Mark	0	1	2	3	4	5
Frequency	2	4	5	5	6	8

Find the mean, median, mode and range of these marks.

Mean = ...

Median = ...

Mode = ...

Range = ... [7]

(c) The table shows the marks gained by some students in their English test.

View solution

Mark	52	75	91
Number of students	x	45	11

The mean mark for these students is 70.3 .

Find the value of x.

x = ... [3]

© UCLES 2017

9

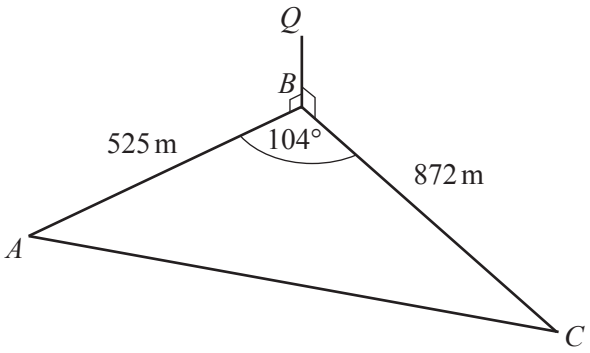

NOT TO SCALE

ABC is a triangular field on horizontal ground.
There is a vertical pole *BQ* at *B*.
AB = 525 m, *BC* = 872 m and angle *ABC* = 104°.

(a) Use the cosine rule to calculate the distance *AC*.

View solution

AC = ... m [4]

(b) The angle of elevation of *Q* from *C* is 1.0°.

View solution

Showing all your working, calculate the angle of elevation of *Q* from *A*.

..... [4]

(c) **(i)** Calculate the area of the field.

View solution

..... m^2 [2]

(ii) The field is drawn on a map with the scale 1 : 20 000.

View solution

Calculate the area of the field on the map in cm^2.

.....cm^2 [2]

10 $\mathscr{E} = \{21, 22, 23, 24, 25, 26, 27, 28, 29, 30\}$
$A = \{ x : x \text{ is a multiple of } 3\}$
$B = \{ x : x \text{ is prime}\}$
$C = \{ x : x \leqslant 25\}$

(a) Complete the Venn diagram.

View solution

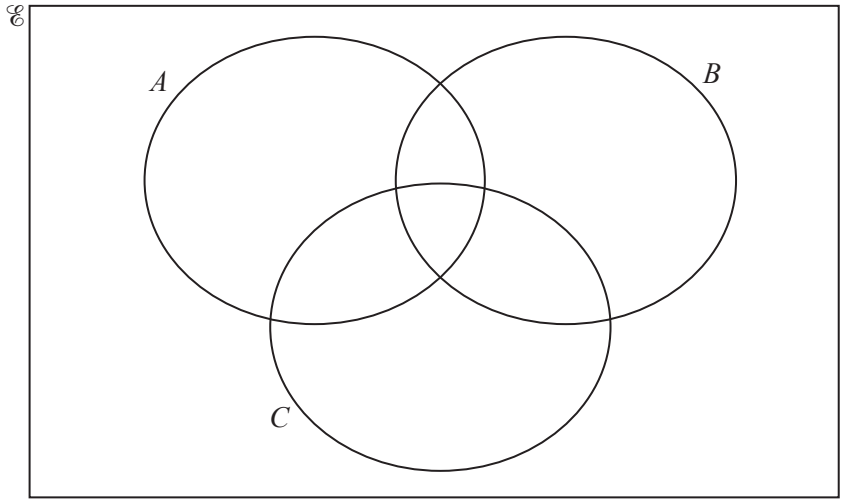

[4]

(b) Use set notation to complete the statements.

View solution

(i) 26 ..... B [1]

(ii) $A \cap B =$ ..... [1]

(c) List the elements of $B \cup (C \cap A)$.

View solution

..... [2]

(d) Find

View solution

(i) $\text{n}(C)$,

..... [1]

(ii) $\text{n}(B' \cup (B \cap C))$.

View solution

..... [1]

(e) $(A \cap C)$ is a subset of $(A \cup C)$.

View solution

Complete this statement using set notation.

$(A \cap C)$ ..... $(A \cup C)$ [1]

© UCLES 2017

11 The table shows the first four terms in sequences A, B, C and D.

View solution

Complete the table.

Sequence	1st term	2nd term	3rd term	4th term	5th term		nth term
A	16	25	36	49			
B	5	8	11	14			
C	11	17	25	35			
D	$\frac{3}{2}$	$\frac{4}{3}$	$\frac{5}{4}$	$\frac{6}{5}$			

[12]

© UCLES 2017

BLANK PAGE

Permission to reproduce items where third-party owned material protected by copyright is included has been sought and cleared where possible. Every reasonable effort has been made by the publisher (UCLES) to trace copyright holders, but if any items requiring clearance have unwittingly been included, the publisher will be pleased to make amends at the earliest possible opportunity.

To avoid the issue of disclosure of answer-related information to candidates, all copyright acknowledgements are reproduced online in the Cambridge International Examinations Copyright Acknowledgements Booklet. This is produced for each series of examinations and is freely available to download at www.cie.org.uk after the live examination series.

Cambridge International Examinations is part of the Cambridge Assessment Group. Cambridge Assessment is the brand name of University of Cambridge Local Examinations Syndicate (UCLES), which is itself a department of the University of Cambridge.