Cambridge IGCSE

Cambridge Assessment International Education
Cambridge International General Certificate of Secondary Education

CANDIDATE NAME									
CENTRE NUMBER						CANDIDATE NUMBER				

MATHEMATICS **0580/41**

Paper 4 (Extended) **May/June 2019**

2 hours 30 minutes

Candidates answer on the Question Paper.

Additional Materials: Electronic calculator
Tracing paper (optional)
Geometrical instruments

READ THESE INSTRUCTIONS FIRST

Write your centre number, candidate number and name on all the work you hand in.
Write in dark blue or black pen.
You may use an HB pencil for any diagrams or graphs.
Do not use staples, paper clips, glue or correction fluid.
DO **NOT** WRITE IN ANY BARCODES.

Answer **all** questions.
If working is needed for any question it must be shown below that question.
Electronic calculators should be used.
If the degree of accuracy is not specified in the question, and if the answer is not exact, give the answer to three significant figures. Give answers in degrees to one decimal place.
For π, use either your calculator value or 3.142.

At the end of the examination, fasten all your work securely together.
The number of marks is given in brackets [ ] at the end of each question or part question.
The total of the marks for this paper is 130.

This document consists of **16** printed pages.

© UCLES 2019

Cambridge Assessment International Education

1

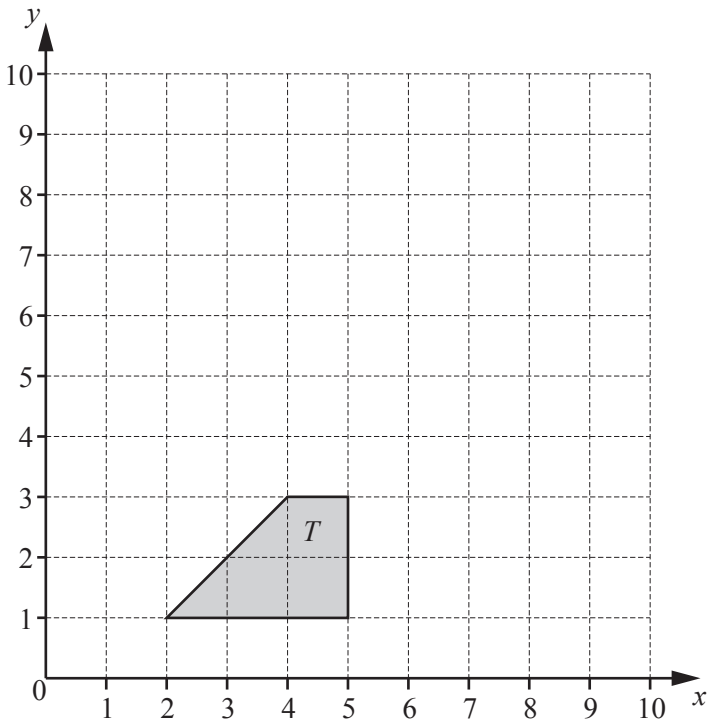

(a) (i) Translate shape T by the vector $\begin{pmatrix} -1 \\ 6 \end{pmatrix}$.

View solution

Label the image A. [2]

(ii) Rotate shape T about the point (5, 3) through 180°.
Label the image B. [2]

(iii) Describe fully the **single** transformation that maps shape A onto shape B.

.....

..... [3]

(b) (i) Reflect shape T in the line $y = x$. [2]

(ii) Find the matrix that represents the transformation in **part (b)(i)**.

View solution

( ) [2]

© UCLES 2019

2 The table shows some values for $y = x^3 + 3x^2 + 2$.

x	−3.5	−3	−2.5	−2	−1.5	−1	−0.5	0	0.5	1	1.5
y	−4.1		5.1	6	5.4	4	2.6		2.9		12.1

(a) Complete the table. View solution [3]

(b) On the grid, draw the graph of $y = x^3 + 3x^2 + 2$ for $-3.5 \leqslant x \leqslant 1.5$.

View solution

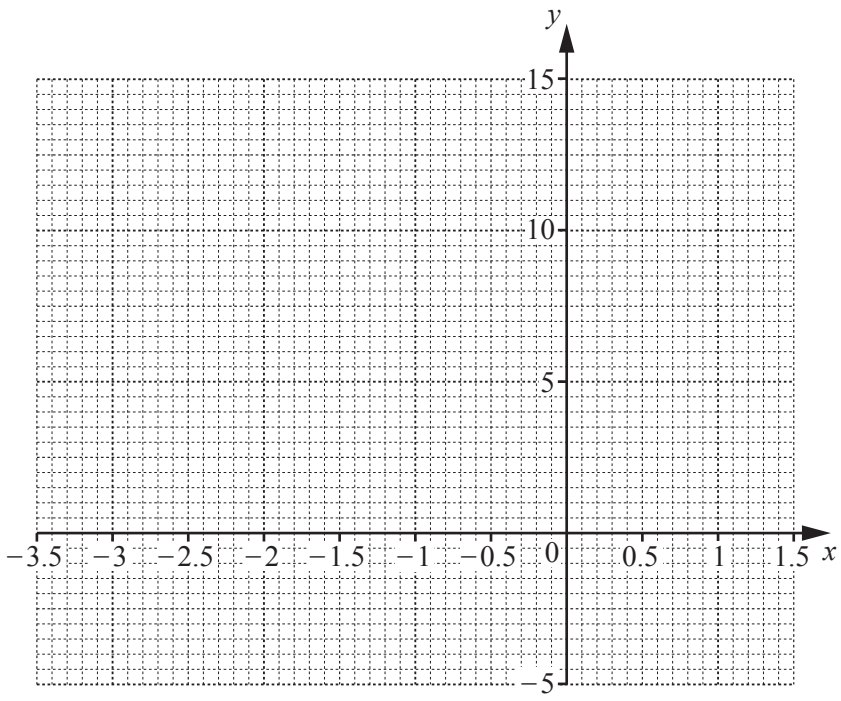

[4]

(c) Use your graph to solve the equation $x^3 + 3x^2 + 2 = 0$ for $-3.5 \leqslant x \leqslant 1.5$. View solution

$x =$ ..... [1]

(d) By drawing a suitable straight line, solve the equation $x^3 + 3x^2 + 2x + 2 = 0$ for $-3.5 \leqslant x \leqslant 1.5$.

View solution

$x =$ ..... [2]

(e) For $-3.5 \leqslant x \leqslant 1.5$, the equation $x^3 + 3x^2 + 2 = k$ has three solutions and k is an integer.

View solution

Write down a possible value of k.

$k =$ ..... [1]

© UCLES 2019

3

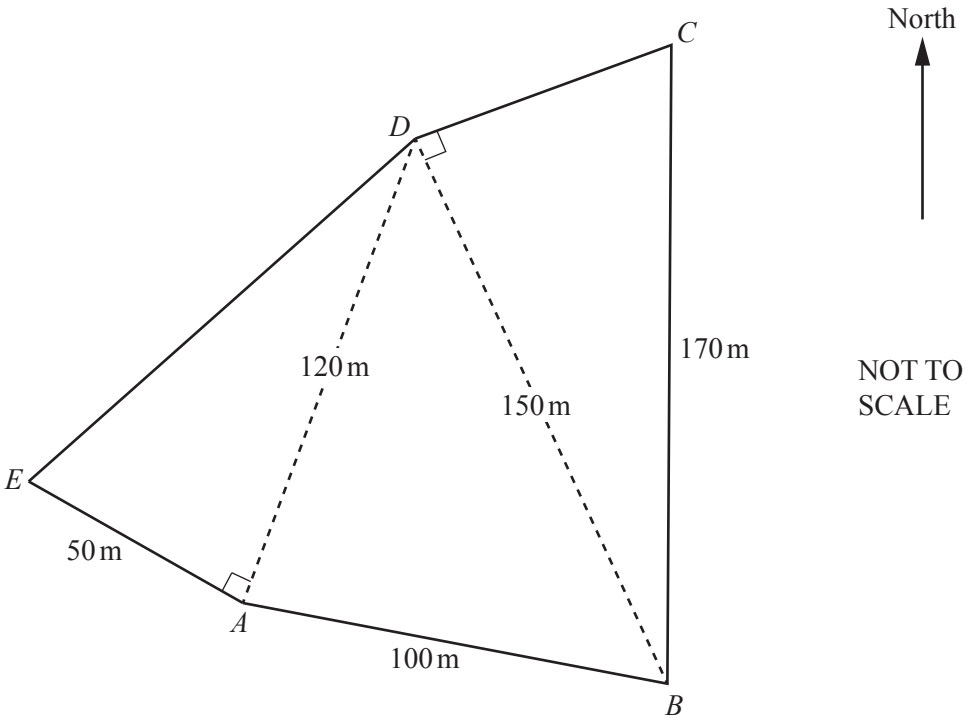

The diagram shows a field *ABCDE*.

(a) Calculate the perimeter of the field *ABCDE*.

View solution

..... m [4]

(b) Calculate angle *ABD*.

View solution

Angle *ABD* = ... [4]

© UCLES 2019

(c) **(i)** Calculate angle *CBD*.

View solution

Angle *CBD* = ... [2]

(ii) The point *C* is due north of the point *B*.

Find the bearing of *D* from *B*.

View solution

..... [2]

(d) Calculate the area of the field *ABCDE*.
Give your answer in hectares.
[1 hectare = 10 000 m^2]

View solution

..... hectares [4]

© UCLES 2019

4 **(a)** The test scores of 14 students are shown below.

21 21 23 26 25 21 22 20 21 23 23 27 24 21

(i) Find the range, mode, median and mean of the test scores.

View solution

Range = ...

Mode = ...

Median = ...

Mean = ... [6]

(ii) A student is chosen at random.

View solution

Find the probability that this student has a test score of more than 24.

..... [1]

(b) Petra records the score in each test she takes.

View solution

The mean of the first n scores is x.
The mean of the first $(n - 1)$ scores is $(x + 1)$.

Find the nth score in terms of n and x.
Give your answer in its simplest form.

..... [3]

© UCLES 2019

(c) During one year the midday temperatures, t°C, in Zedford were recorded.
The table shows the results.

Temperature (t°C)	$0 < t \leqslant 10$	$10 < t \leqslant 15$	$15 < t \leqslant 20$	$20 < t \leqslant 25$	$25 < t \leqslant 35$
Number of days	50	85	100	120	10

(i) Calculate an estimate of the mean.

View solution

..... °C [4]

(ii) Complete the histogram to show the information in the table.

View solution

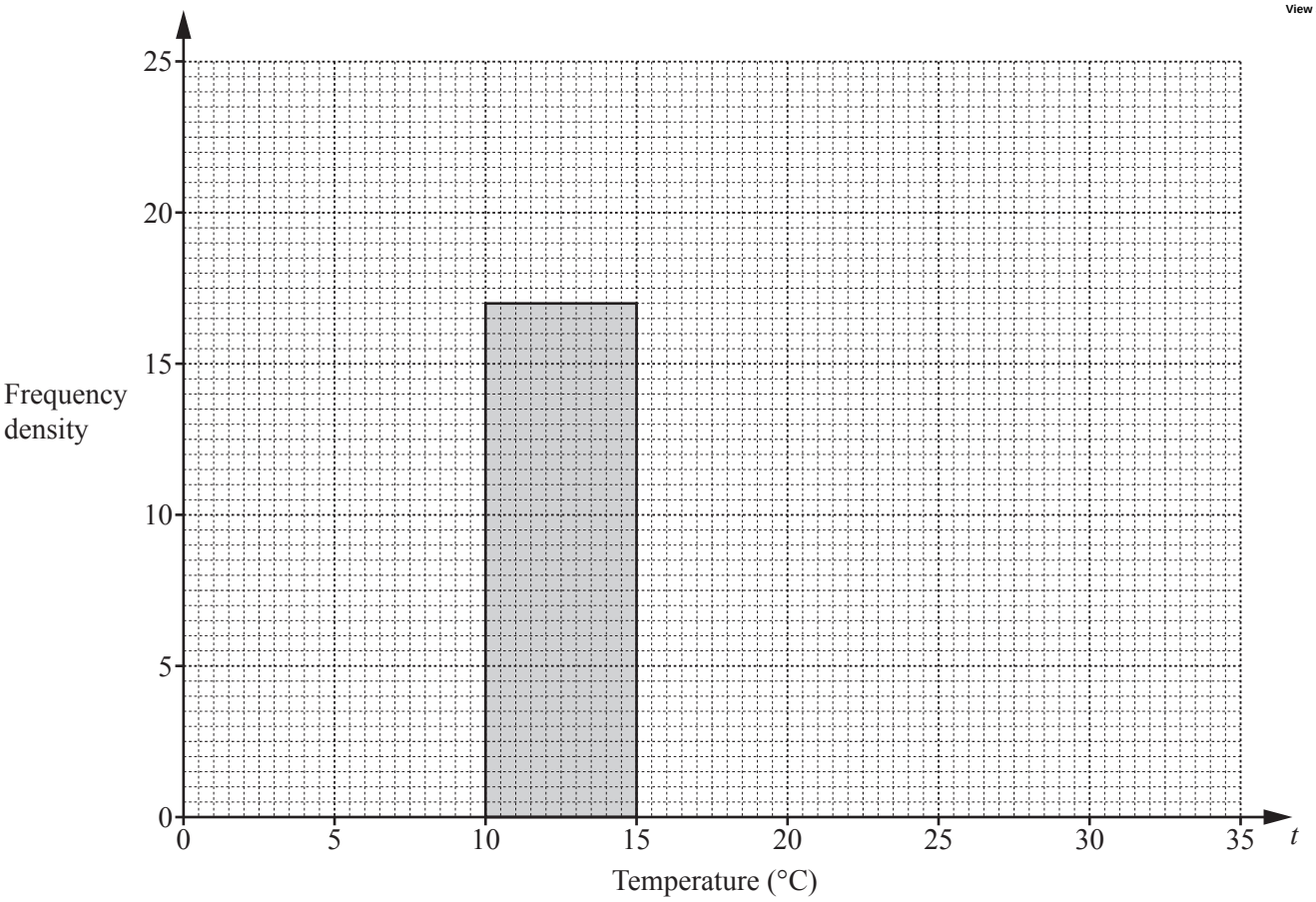

[4]

5

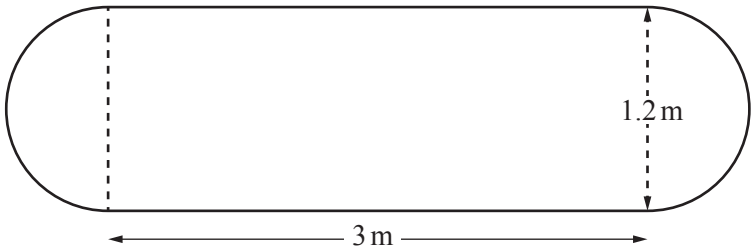

NOT TO SCALE

The diagram shows the surface of a garden pond, made from a rectangle and two semicircles.
The rectangle measures 3 m by 1.2 m.

(a) Calculate the area of this surface.

View solution

..... m^2 [3]

(b) The pond is a prism and the water in the pond has a depth of 20 cm.

Calculate the number of litres of water in the pond.

View solution

..... litres [3]

(c) After a rainfall, the number of litres of water in the pond is 1007.

Calculate the increase in the depth of water in the pond.
Give your answer in centimetres.

View solution

..... cm [3]

© UCLES 2019

6 $\mathscr{E}$ = {students in a school}
F = {students who play football}
B = {students who play baseball}

There are 240 students in the school.

- 120 students play football
- 40 students play baseball
- 90 students play football but not baseball.

(a) Complete the Venn diagram to show this information.

View solution

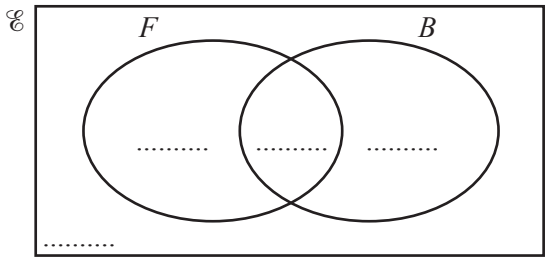

[2]

(b) Find $n(F' \cap B')$.

View solution

..... [1]

(c) A student in the school is chosen at random.

View solution

Find the probability that this student plays baseball but not football.

..... [1]

(d) Two students who play baseball are chosen at random.

View solution

Find the probability that they both also play football.

..... [3]

© UCLES 2019

7 **(a)** $s = ut + \frac{1}{2}at^2$

View solution

(i) Find s when $t = 26.5$, $u = 104.3$ and $a = -2.2$.
Give your answer in standard form, correct to 4 significant figures.

$s =$ ..... [4]

(ii) Rearrange the formula to write a in terms of u, t and s.

View solution

$a =$ ..... [3]

© UCLES 2019

(b)

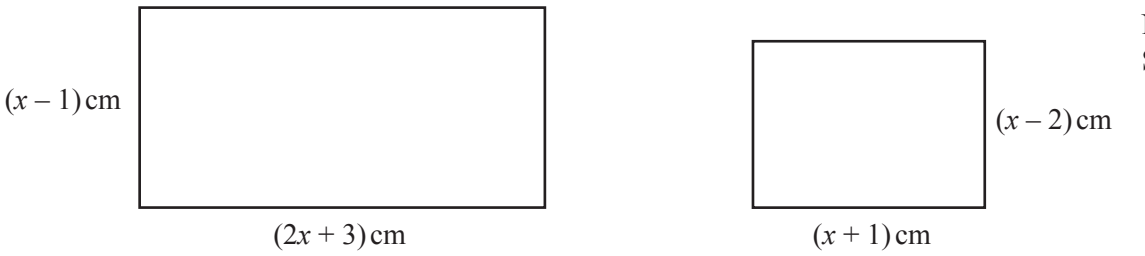

NOT TO SCALE

View solution

The difference between the areas of the two rectangles is $62\,\text{cm}^2$.

(i) Show that $x^2 + 2x - 63 = 0$.

[3]

(ii) Factorise $x^2 + 2x - 63$.

View solution

..... [2]

(iii) Solve the equation $x^2 + 2x - 63 = 0$ to find the difference between the perimeters of the two rectangles.

View solution

..... cm [2]

8 **(a)** The price of a book increases from \$2.50 to \$2.65 .

View solution

Calculate the percentage increase.

..... % [3]

(b) Scott invests \$500 for 7 years at a rate of 1.5% per year simple interest.

View solution

Calculate the value of his investment at the end of the 7 years.

\$..... [3]

(c) In a city the population is increasing exponentially at a rate of 1.6% per year.

View solution

Find the overall percentage increase at the end of 20 years.

..... % [2]

(d) The population of a village is 6400.
The population is decreasing exponentially at a rate of r% per year.
After 22 years, the population will be 2607.

View solution

Find the value of r.

$r =$ ..... [3]

© UCLES 2019

9 $f(x) = 7x - 2$ $g(x) = x^2 + 1$ $h(x) = 3^x$

(a) Find gh(2).

View solution

..... [2]

(b) Find $f^{-1}(x)$.

View solution

$f^{-1}(x) =$ ..... [2]

(c) $gg(x) = ax^4 + bx^2 + c$

Find the values of a, b and c.

View solution

$a =$ .....

$b =$ .....

$c =$ ..... [3]

(d) Find x when $hf(x) = 81$.

View solution

$x =$ ..... [3]

10 The volume of each of the following solids is $1000\,\text{cm}^3$.

Calculate the value of x for each solid.

(a) A cube with side length x cm.

View solution

$x =$ ..... [1]

(b) A sphere with radius x cm.

View solution

[The volume, V, of a sphere with radius r is $V = \frac{4}{3}\pi r^3$.]

$x =$ ..... [3]

(c)

View solution

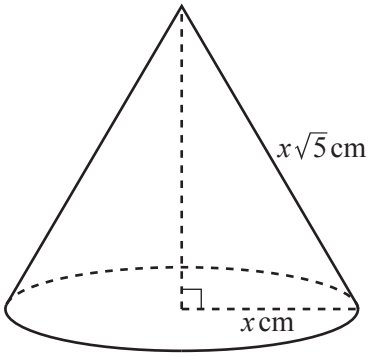

NOT TO SCALE

A cone with radius x cm and slant height $x\sqrt{5}$ cm.

[The volume, V, of a cone with radius r and height h is $V = \frac{1}{3}\pi r^2 h$.]

$x =$ ..... [4]

© UCLES 2019

(d)

View solution

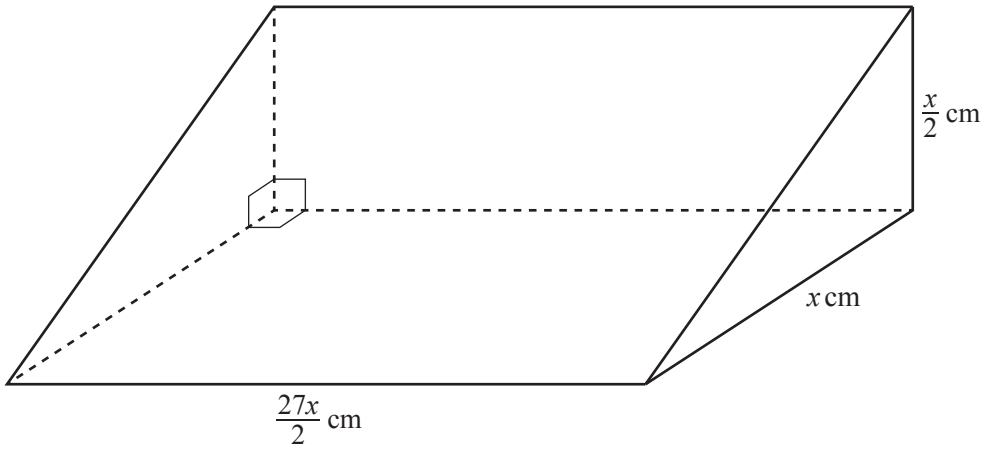

NOT TO SCALE

A prism with a right-angled triangle as its cross-section.

$x =$ ..... [4]

Question 11 is printed on the next page.

11 Brad travelled from his home in New York to Chamonix.

View solution

- He left his home at 16 30 and travelled by taxi to the airport in New York.
  This journey took 55 minutes and had an average speed of 18 km/h.

- He then travelled by plane to Geneva, departing from New York at 22 15.
  The flight path can be taken as an arc of a circle of radius 6400 km with a sector angle of 55.5°.
  The local time in Geneva is 6 hours ahead of the local time in New York.
  Brad arrived in Geneva at 11 25 the next day.

- To complete his journey, Brad travelled by bus from Geneva to Chamonix.
  This journey started at 13 00 and took 1 hour 36 minutes.
  The average speed was 65 km/h.
  The local time in Chamonix is the same as the local time in Geneva.

Find the overall average speed of Brad's journey from his home in New York to Chamonix.
Show all your working and give your answer in km/h.

..... km/h [11]

Permission to reproduce items where third-party owned material protected by copyright is included has been sought and cleared where possible. Every reasonable effort has been made by the publisher (UCLES) to trace copyright holders, but if any items requiring clearance have unwittingly been included, the publisher will be pleased to make amends at the earliest possible opportunity.

To avoid the issue of disclosure of answer-related information to candidates, all copyright acknowledgements are reproduced online in the Cambridge Assessment International Education Copyright Acknowledgements Booklet. This is produced for each series of examinations and is freely available to download at www.cambridgeinternational.org after the live examination series.

Cambridge Assessment International Education is part of the Cambridge Assessment Group. Cambridge Assessment is the brand name of the University of Cambridge Local Examinations Syndicate (UCLES), which itself is a department of the University of Cambridge.

© UCLES 2019