Cambridge Assessment International Education

Cambridge IGCSE™

CANDIDATE NAME									
CENTRE NUMBER						CANDIDATE NUMBER				

MATHEMATICS **0580/32**

Paper 3 (Core) **May/June 2020**

2 hours

You must answer on the question paper.

You will need: Geometrical instruments

INSTRUCTIONS

- Answer **all** questions.
- Use a black or dark blue pen. You may use an HB pencil for any diagrams or graphs.
- Write your name, centre number and candidate number in the boxes at the top of the page.
- Write your answer to each question in the space provided.
- Do **not** use an erasable pen or correction fluid.
- Do **not** write on any bar codes.
- You should use a calculator where appropriate.
- You may use tracing paper.
- You must show all necessary working clearly.
- Give non-exact numerical answers correct to 3 significant figures, or 1 decimal place for angles in degrees, unless a different level of accuracy is specified in the question.
- For π, use either your calculator value or 3.142.

INFORMATION

- The total mark for this paper is 104.
- The number of marks for each question or part question is shown in brackets [ ].

This document has **16** pages. Blank pages are indicated.

© UCLES 2020

1 **(a)** Paul has a set of 8 cards, each with a number written on it.
The numbers on the cards are 1, 1, 2, 3, 3, 3, 4, 5.
One card is taken at random.

View solution

Write down the probability that the number on the card is

(i) 1,

..... [1]

(ii) an odd number,

View solution

..... [1]

(iii) a prime number,

View solution

..... [1]

(iv) a number less than 6.

View solution

..... [1]

(b) Dina has a set of 12 cards.
These are the numbers on the cards.

View solution

3 4 1 3 2 1 3 4 2 2 1 3

Work out

(i) the median,

..... [2]

(ii) the mode,

View solution

..... [1]

(iii) the mean,

View solution

..... [2]

(iv) the range.

View solution

..... [1]

© UCLES 2020

(c) Helena has a different set of cards.
She takes one card at random and records the number shown.
She does this 50 times.
The results are shown in the table.

View solution

Number on card	Frequency
1	8
2	11
3	10
4	9
5	12

Calculate the mean of her results.

..... [3]

2 **(a)** Jeremy goes on holiday.
He parks his car in the airport car park from

View solution

10 00 on Tuesday 17 July to 17 00 on Saturday 28 July.

The car park charges are shown below.

Monday to Friday	$14 per day
Saturday and Sunday	$8 per day

Part days are charged as full days

Find the total cost of parking his car.

$ ..... [3]

(b) At the airport, Jeremy buys a ring for $53 and a watch for $65.

View solution

Work out how much change he receives from $120.

$ ..... [2]

© UCLES 2020

(c) The plane flies from Melbourne to Tokyo at an average speed of 783 km/h.
The distance from Melbourne to Tokyo is 8352 km.
The plane leaves Melbourne at 09 52 local time.
The local time in Tokyo is 2 hours behind the local time in Melbourne.

View solution

Find the local time in Tokyo when the plane arrives.

..... [4]

(d) In Tokyo, Jeremy buys a bracelet for 2050 yen.
The exchange rate is 1 yen = \$0.0125 .

View solution

Calculate the price of the bracelet in dollars.
Give your answer correct to the nearest dollar.

\$ ..... [2]

(e) The plane ticket costs \$680 plus a tax of 16%.

View solution

Find the total cost of this ticket.

\$ ..... [2]

© UCLES 2020

3 Belle records the height, in centimetres, and the mass, in kilograms, of some goats.
Some of her results are shown in the scatter diagram.

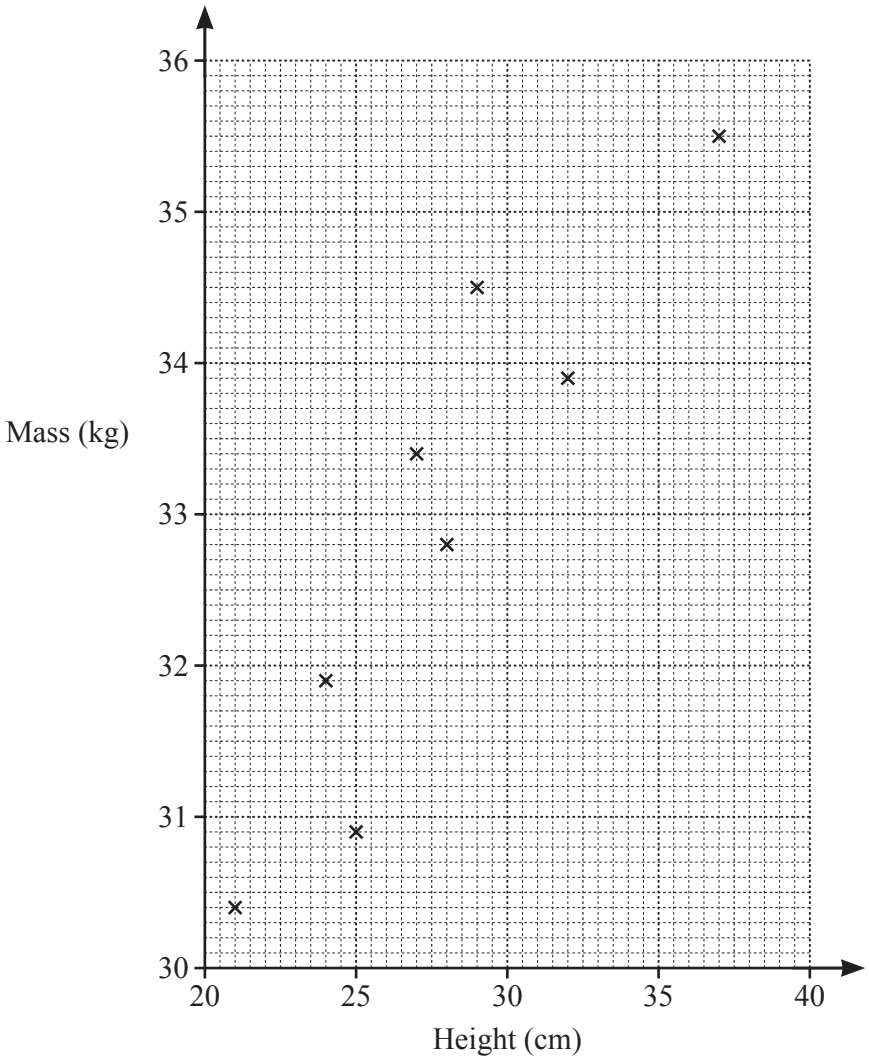

(a) The table shows four more results.

Height (cm)	23	30	36	38
Mass (kg)	31.2	33.5	34.6	34.8

Plot these points on the scatter diagram. [2]

(b) What type of correlation is shown in this scatter diagram?

..... [1]

(c) **(i)** Draw a line of best fit on the scatter diagram. [1]

View solution

(ii) Use your line of best fit to estimate the height of a goat with mass 32.5 kg.

..... cm [1]

(d) Work out the percentage of the 12 goats that have a height between 26 cm and 35 cm.

View solution

..... % [3]

4 Alexa, Ben and Chloe own a restaurant.

(a) Alexa records some temperatures.

View solution

Fridge 4 °C Cool box −3 °C Freezer −19 °C

(i) Find the difference in temperature between the fridge and the cool box.

..... °C [1]

(ii) Find the difference in temperature between the cool box and the freezer.

View solution

..... °C [1]

(iii) The temperature in the cold room is 5 °C lower than the fridge.

View solution

Find the temperature in the cold room.

..... °C [1]

(b) Alexa, Ben and Chloe share the profits from their restaurant in the ratio 2 : 6 : 7.
One year the restaurant makes a profit of $60 000.

View solution

Work out how much each receives.

Alexa = $ .....

Ben = $ .....

Chloe = $ ..... [3]

(c) They invest $12 000 at a rate of n% per year simple interest.
At the end of 3 years the value of the investment is $12 900.

View solution

Find the value of n.

n = ... [3]

© UCLES 2020

5 **(a)** $T = 3a^2b$

View solution

Find the value of T when $a = 4$ and $b = 5$.

$T =$ ..... [2]

(b) **(i)** Multiply out the brackets.

$x(3 - 5x)$

View solution

..... [2]

(ii) Factorise fully.

$5x - 20x^2$

View solution

..... [2]

(c)

View solution

NOT TO SCALE

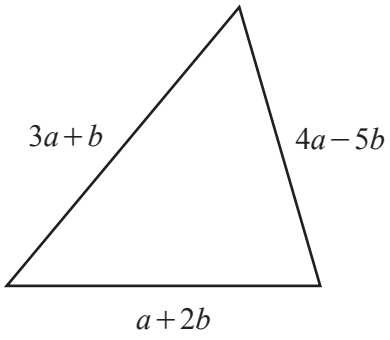

Find an expression for the perimeter of this triangle.
Give your answer in its simplest form.

..... [3]

6 (a)

View solution

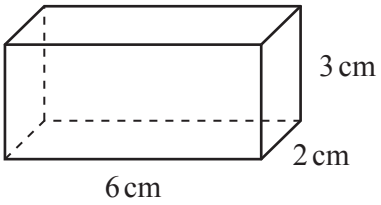

NOT TO SCALE

The diagram shows a cuboid.

On the 1 cm^2 grid, complete the net of the cuboid.
One face has been drawn for you.

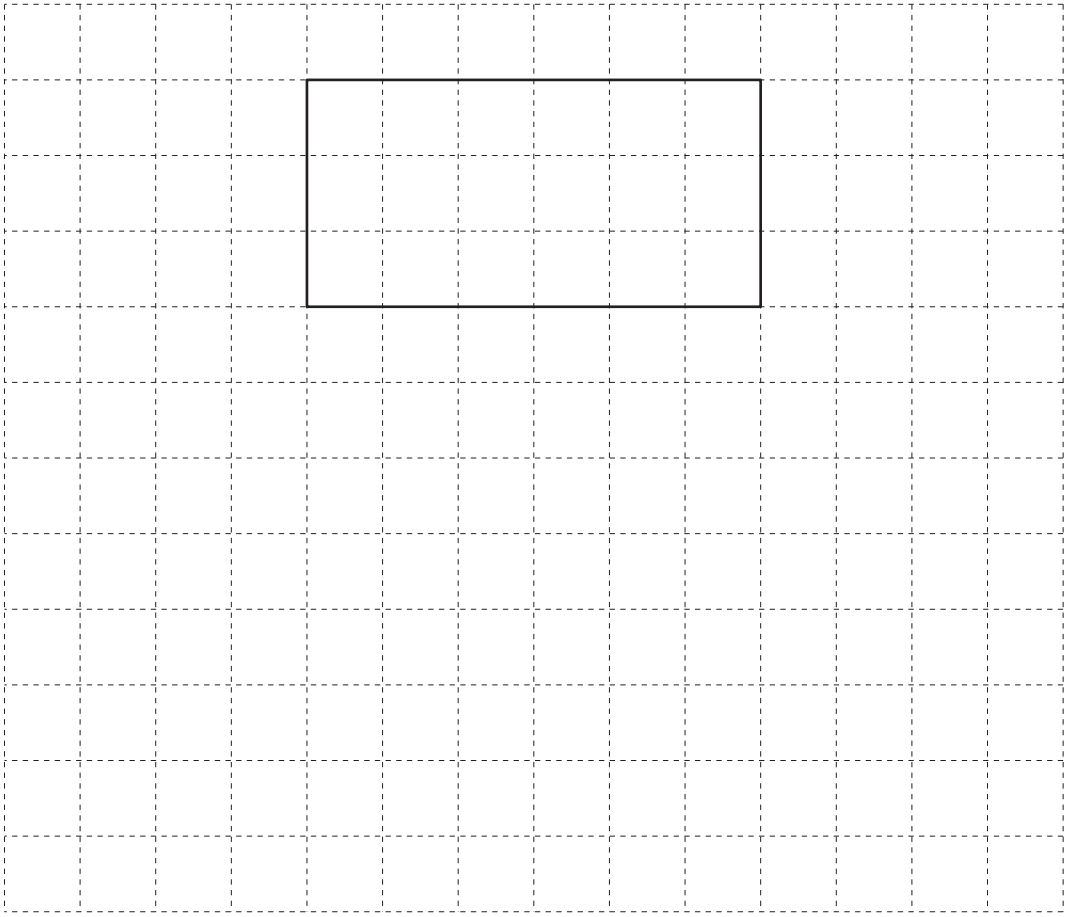

[3]

(b) A cube has a surface area of $384\,cm^2$.

Find the length of one of its sides.

View solution

..... cm [3]

(c)

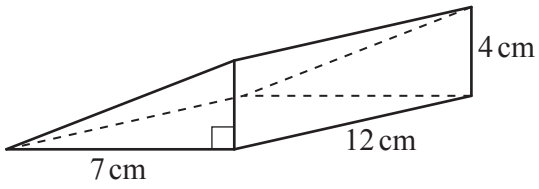

NOT TO SCALE

View solution

The diagram shows a right-angled triangular prism.

Work out the volume of the prism.

..... cm^3 [3]

7 (a)

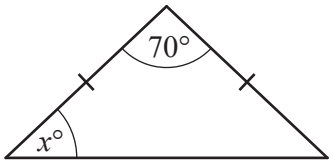

NOT TO SCALE

View solution

The diagram shows an isosceles triangle.

Find the value of x.

$x =$ ..... [2]

(b)

View solution

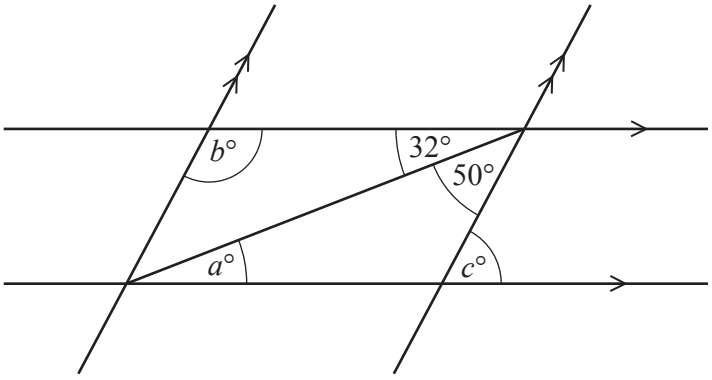

NOT TO SCALE

The diagram shows two pairs of parallel lines.

Find the value of a, the value of b and the value of c.

$a =$ .....

$b =$ .....

$c =$ ..... [3]

© UCLES 2020

(c)

View solution

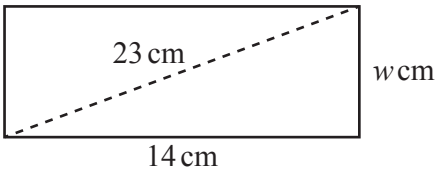

NOT TO SCALE

The diagram shows a rectangle 14 cm by w cm.
The diagonal is 23 cm.

Calculate the value of w.

$w =$ ..... [3]

(d)

View solution

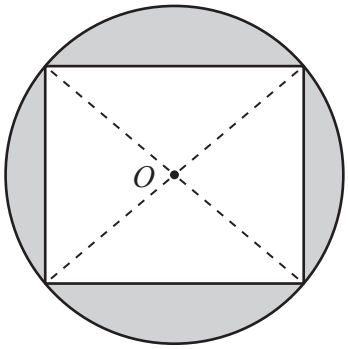

NOT TO SCALE

The diagram shows a square with vertices on the circumference of a circle, centre O.
The radius of the circle is 6 cm.

Work out the shaded area.

..... cm^2 [5]

8

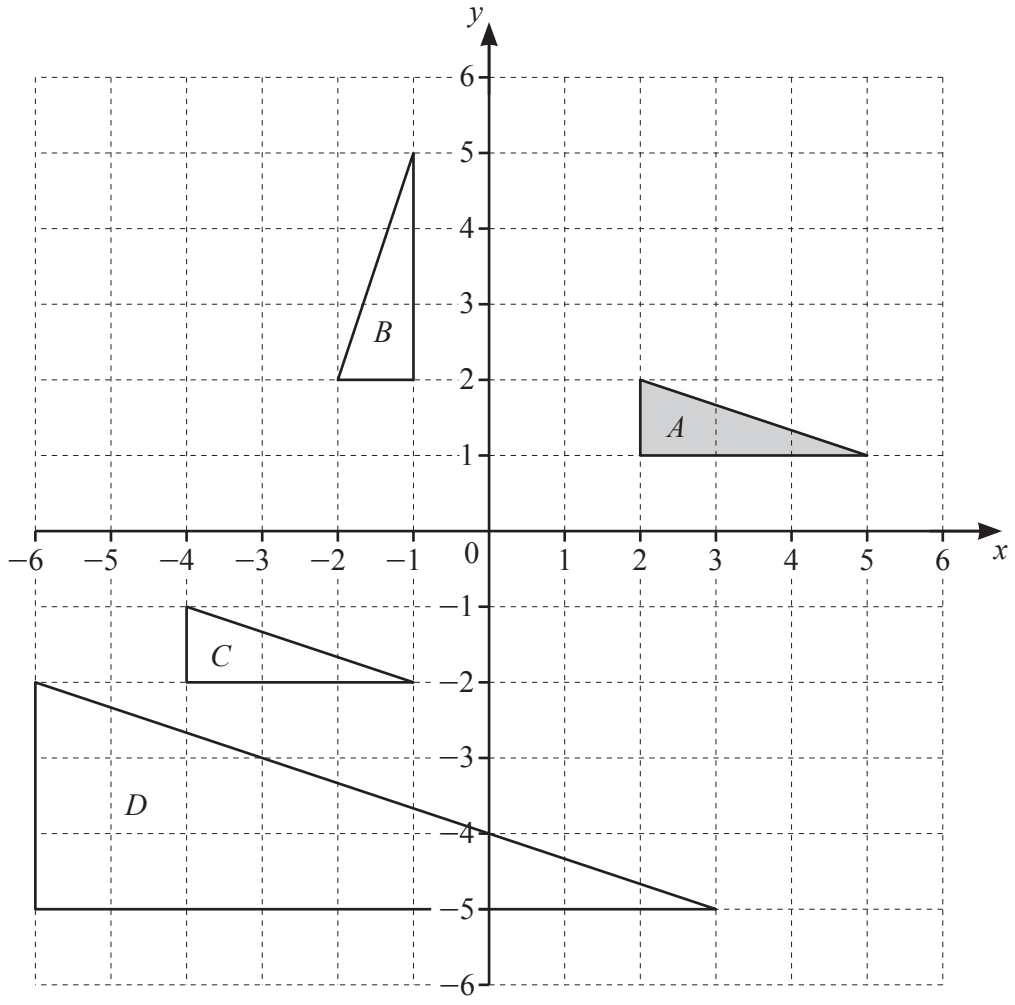

(a) Describe fully the **single** transformation that maps

View solution

(i) triangle A onto triangle B,

.....

..... [3]

(ii) triangle A onto triangle C,

View solution

.....

..... [2]

(iii) triangle A onto triangle D.

View solution

.....

..... [3]

(b) On the grid, draw the image of triangle A after a reflection in the line $y = -1$. View solution [2]

9 **(a)** Complete the table of values for $y = x^2 - 3x - 6$.

View solution

x	−3	−2	−1	0	1	2	3	4	5	6
y	12		−2					−2		12

[3]

(b) On the grid, draw the graph of $y = x^2 - 3x - 6$ for $-3 \leqslant x \leqslant 6$.

View solution

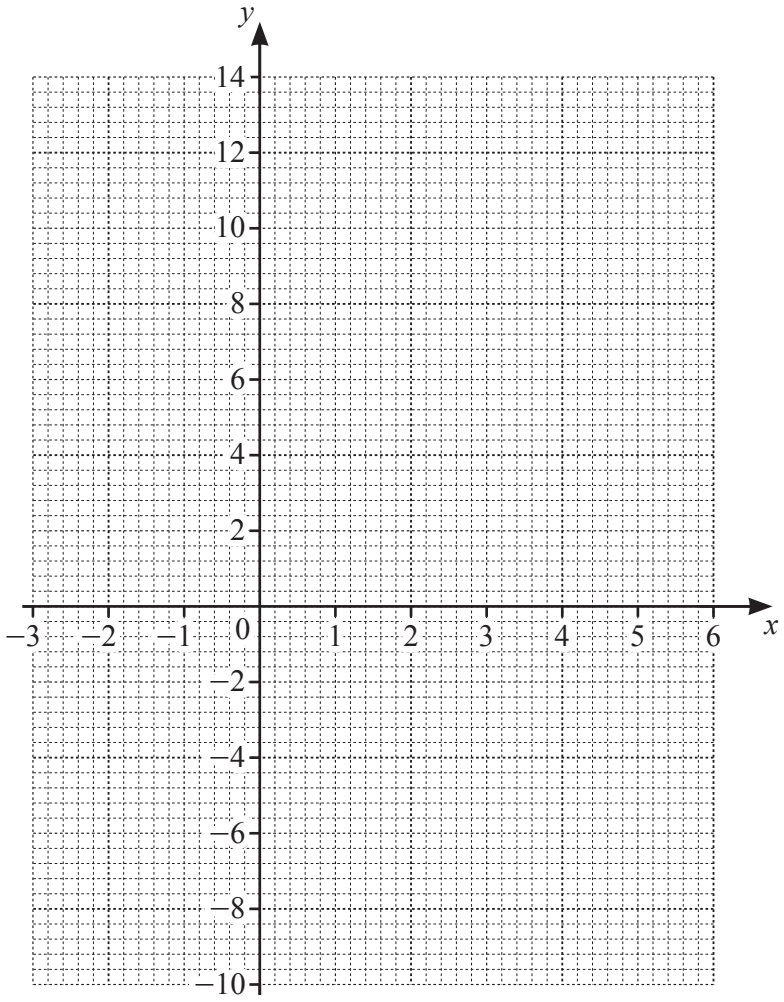

[4]

(c) Write down the equation of the line of symmetry of the graph.

View solution

..... [1]

(d) Use your graph to solve the equation $x^2 - 3x - 6 = 0$.

View solution

$x =$ ..... or $x =$ ..... [2]

Question 10 is printed on the next page.

© UCLES 2020

10 **(a)** Solve these equations.

(i) $5x = -30$

View solution

$x =$ ..... [1]

(ii) $4x - 2 = 28$

View solution

$x =$ ..... [2]

(iii) $3(2x + 7) = 12$

View solution

$x =$ ..... [3]

(b) Solve the simultaneous equations.
You must show all your working.

$$5x - 2y = 44$$
$$2x + 3y = 10$$

View solution

$x =$ .....

$y =$ ..... [4]

Permission to reproduce items where third-party owned material protected by copyright is included has been sought and cleared where possible. Every reasonable effort has been made by the publisher (UCLES) to trace copyright holders, but if any items requiring clearance have unwittingly been included, the publisher will be pleased to make amends at the earliest possible opportunity.

To avoid the issue of disclosure of answer-related information to candidates, all copyright acknowledgements are reproduced online in the Cambridge Assessment International Education Copyright Acknowledgements Booklet. This is produced for each series of examinations and is freely available to download at www.cambridgeinternational.org after the live examination series.

Cambridge Assessment International Education is part of the Cambridge Assessment Group. Cambridge Assessment is the brand name of the University of Cambridge Local Examinations Syndicate (UCLES), which itself is a department of the University of Cambridge.

© UCLES 2020