Cambridge Assessment International Education

Cambridge IGCSE™

CANDIDATE NAME									
CENTRE NUMBER						CANDIDATE NUMBER				

MATHEMATICS **0580/12**

Paper 1 (Core) **May/June 2021**

1 hour

You must answer on the question paper.

You will need: Geometrical instruments

INSTRUCTIONS

- Answer **all** questions.
- Use a black or dark blue pen. You may use an HB pencil for any diagrams or graphs.
- Write your name, centre number and candidate number in the boxes at the top of the page.
- Write your answer to each question in the space provided.
- Do **not** use an erasable pen or correction fluid.
- Do **not** write on any bar codes.
- You should use a calculator where appropriate.
- You may use tracing paper.
- You must show all necessary working clearly.
- Give non-exact numerical answers correct to 3 significant figures, or 1 decimal place for angles in degrees, unless a different level of accuracy is specified in the question.
- For π, use either your calculator value or 3.142.

INFORMATION

- The total mark for this paper is 56.
- The number of marks for each question or part question is shown in brackets [ ].

© UCLES 2021

1

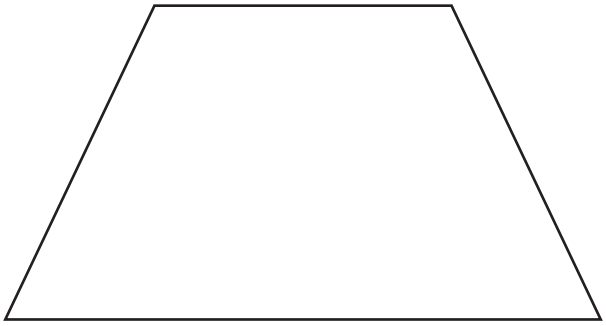

View solution

Draw the line of symmetry on this shape. [1]

2 Write down all the factors of 42.

View solution

..... [2]

3 *P* is a point on a line.

View solution

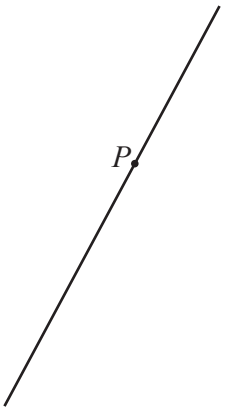

Draw a line through point *P* that is perpendicular to this line. [1]

4

View solution

253 306 185 270 386

Calculate the mean of these numbers.

..... [2]

5 The formula for changing a temperature measured in Celsius (°C) to Fahrenheit (°F) is

$$F = \frac{9C}{5} + 32.$$

View solution

Use this formula to change 65°C to Fahrenheit.

..... °F [2]

6 **(a)** **Without using a calculator**, work out $9 + 5 \times 7 - 4 \div 2$.
You must show all your working.

View solution

..... [2]

(b) Insert one pair of brackets into this statement to make it correct.

View solution

$$9 + 5 \times 7 - 4 \div 2 = 96$$

[1]

7 $\mathbf{a} = \begin{pmatrix} 5 \\ -7 \end{pmatrix}$ $\mathbf{b} = \begin{pmatrix} -2 \\ 6 \end{pmatrix}$

View solution

Work out $\mathbf{a} - \mathbf{b}$.

$\begin{pmatrix} \quad \\ \quad \end{pmatrix}$ [1]

8 Write down the number that you

(a) add to -4 to give an answer of 9,

View solution

..... [1]

(b) subtract from -9 to give an answer of -4.

View solution

..... [1]

© UCLES 2021

9

View solution

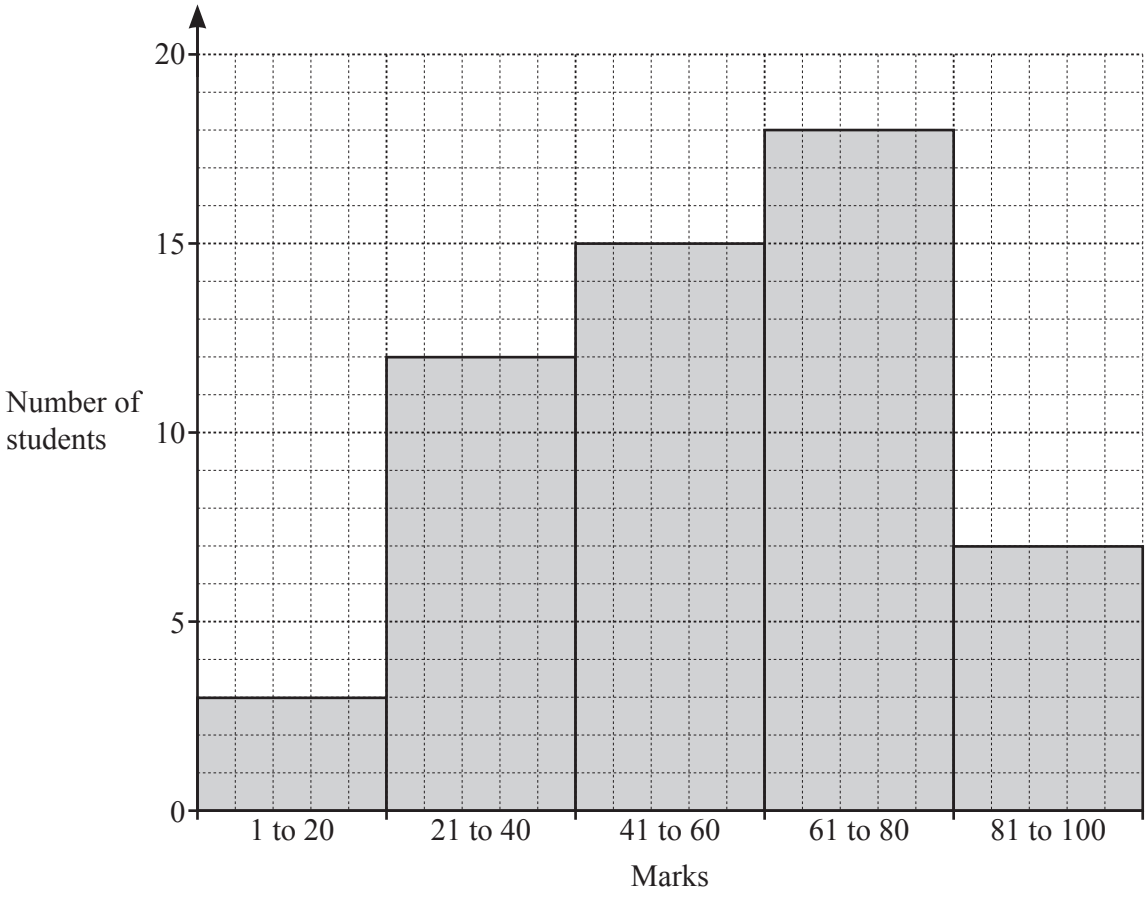

The bar chart shows the marks scored by a group of 55 students in an examination.

Work out the percentage of this group of students who scored marks from 21 to 80.

.....% [3]

10 The probability that Jane wins a game is $\frac{7}{10}$.

View solution

Find the probability that Jane does not win the game.

..... [1]

© UCLES 2021

11 Calculate $\sqrt[4]{0.0256}$.

View solution

..... [1]

12 Emma has 15 mathematics questions to complete.
The stem-and-leaf diagram shows the time, in minutes, it takes her to complete each question.

View solution

0	3	5	6	7	7	8	8
1	1	2	2	3	6	6	6
2	0						

Key: $2 \mid 0 = 20$ minutes

Complete the table.

Mode	..... min
Median	..... min
Range	..... min

[3]

13 **(a)** Complete these statements.

View solution

The reciprocal of 0.2 is .....

A prime number between 90 and 100 is ..... [2]

(b)

View solution

$\frac{7}{5}$ 0.6 $\sqrt{7}$ 8 $\sqrt{9}$

From this list, write down an irrational number.

..... [1]

14 Find the value of x when $7^x \div 7^4 = 7^9$.

View solution

$x =$ ..... [1]

© UCLES 2021

15 **(a)** Henrik draws this scatter diagram.

View solution

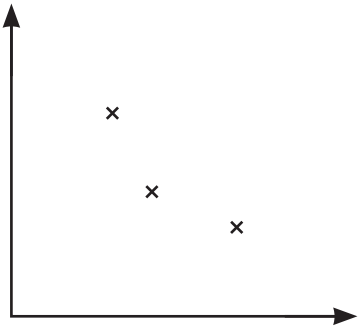

Put a ring around the **one** correct statement about this scatter diagram.

It shows no correlation.	It is not possible to tell if there is correlation as there are not enough points.	It shows negative correlation.	It shows positive correlation.

[1]

(b) Each of the four scatter diagrams shows the same set of data.
A line has been drawn on each diagram.

View solution

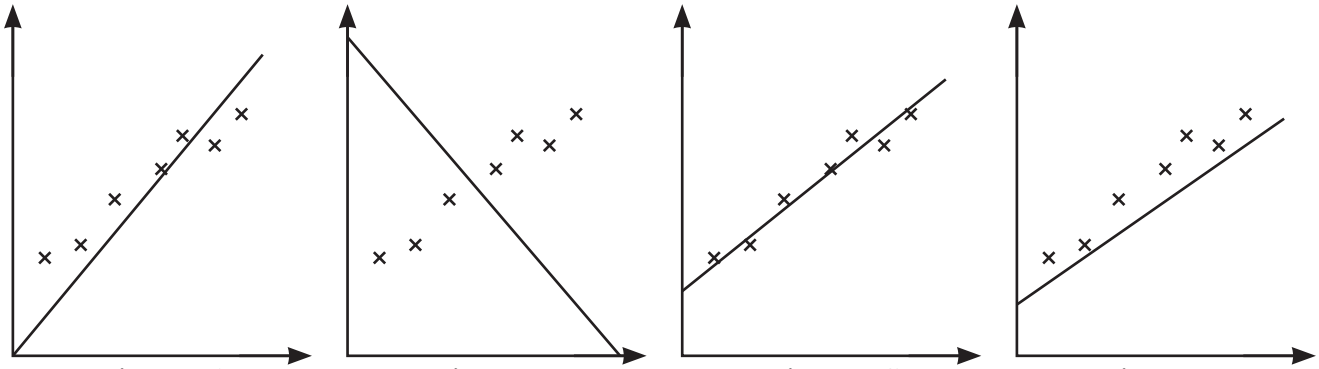

Diagram A Diagram B Diagram C Diagram D

Complete the statement.

The line in Diagram ..... is the most appropriate line of best fit. [1]

16 A cuboid has a square base.
The volume of this cuboid is 867 cm^3 and its height is 12 cm.

View solution

Calculate the length of one side of the square base.

..... cm [3]

17 A rhombus has side length 6.5 cm.
The rhombus can be constructed by drawing two triangles.

View solution

Using a ruler and compasses only, construct the rhombus.
Leave in your construction arcs.
One diagonal of the rhombus has been drawn for you.

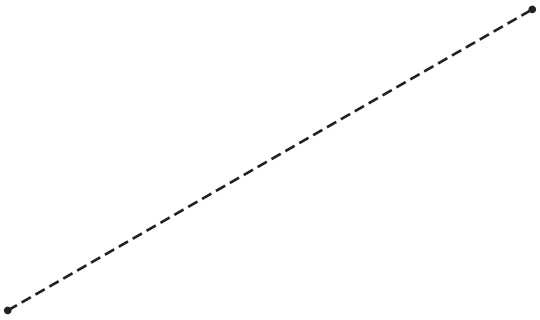

[2]

18 **Without using a calculator**, work out $\frac{2}{3} \div 1\frac{3}{7}$.

You must show all your working and give your answer as a fraction in its simplest form.

View solution

..... [3]

19 A bag contains 5 red balls and 3 blue balls.
Sophie takes a ball at random, notes its colour and then puts it back in the bag.
She does this a second time.

View solution

(a) Complete the tree diagram.

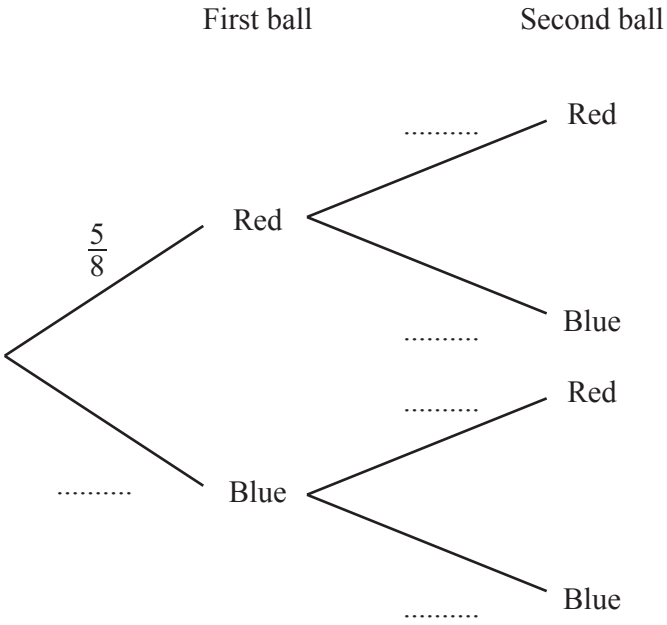

[2]

View solution

(b) Work out the probability that both of the balls she takes are blue.

..... [2]

20

NOT TO SCALE

View solution

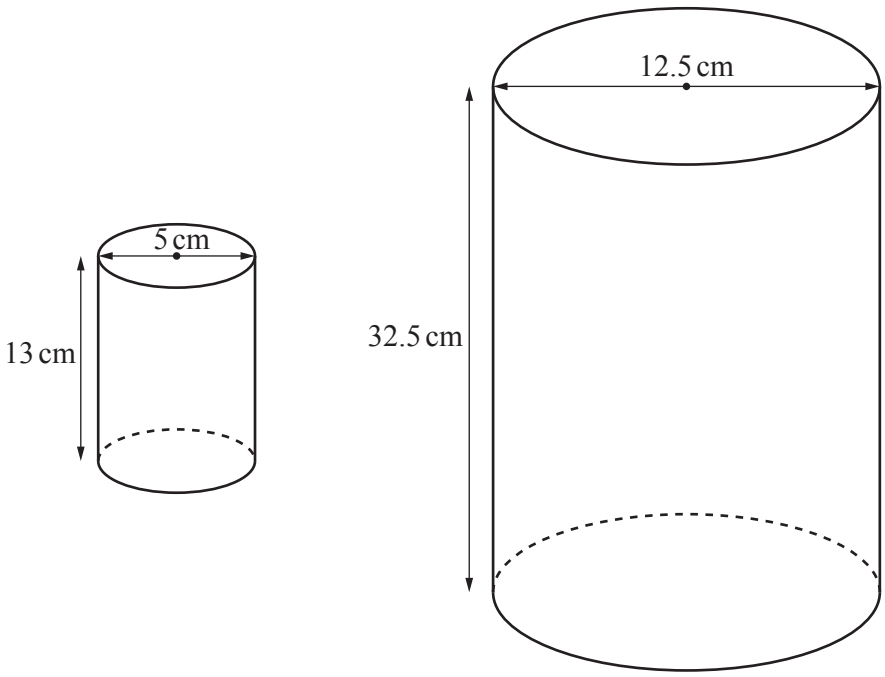

The diagram shows two cylinders.

Show that the two cylinders are mathematically similar.

[2]

21 **(a)** Write 0.006 54 in standard form.

View solution

..... [1]

(b) The number 1.467×10^{102} is written as an ordinary number.

View solution

Write down the number of zeros that follow the digit 7.

..... [1]

© UCLES 2021

22

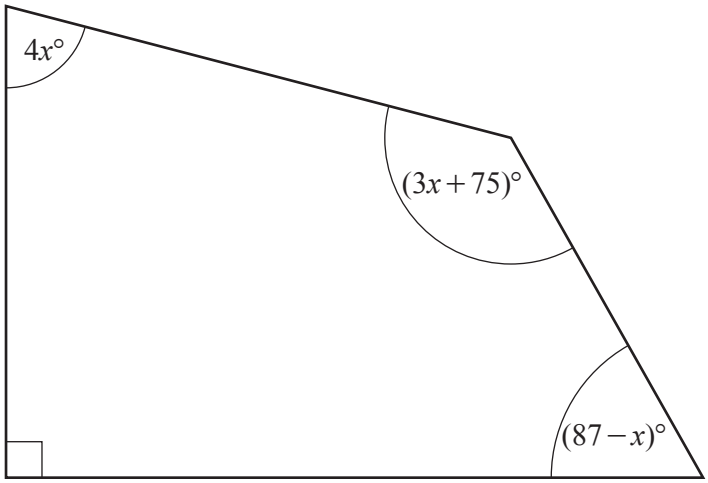

NOT TO SCALE

View solution

The diagram shows a quadrilateral.

Work out the value of x.

$x =$ ..... [4]

23 Work out the lowest common multiple (LCM) of 24 and 54.

View solution

..... [2]

Questions 24 and 25 are printed on the next page.

24 Expand and simplify.

$$5(2x-7)-3(x-5)$$

View solution

..... [2]

25

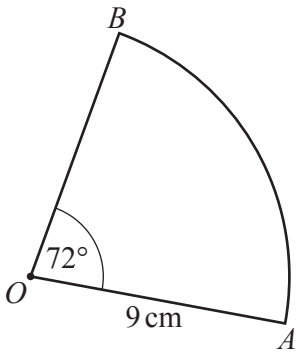

NOT TO SCALE

The diagram shows a sector of a circle, centre O, radius 9 cm.
The sector angle is 72°.

(a) Calculate the length of the arc AB.

View solution

..... cm [2]

(b) Calculate the area of the sector AOB.

View solution

..... cm^2 [2]

Permission to reproduce items where third-party owned material protected by copyright is included has been sought and cleared where possible. Every reasonable effort has been made by the publisher (UCLES) to trace copyright holders, but if any items requiring clearance have unwittingly been included, the publisher will be pleased to make amends at the earliest possible opportunity.

To avoid the issue of disclosure of answer-related information to candidates, all copyright acknowledgements are reproduced online in the Cambridge Assessment International Education Copyright Acknowledgements Booklet. This is produced for each series of examinations and is freely available to download at www.cambridgeinternational.org after the live examination series.

Cambridge Assessment International Education is part of the Cambridge Assessment Group. Cambridge Assessment is the brand name of the University of Cambridge Local Examinations Syndicate (UCLES), which itself is a department of the University of Cambridge.

© UCLES 2021