Cambridge Assessment International Education

Cambridge IGCSE™

CANDIDATE NAME									
CENTRE NUMBER						CANDIDATE NUMBER				

MATHEMATICS **0580/43**

Paper 4 (Extended) **May/June 2021**

2 hours 30 minutes

You must answer on the question paper.

You will need: Geometrical instruments

INSTRUCTIONS

- Answer **all** questions.
- Use a black or dark blue pen. You may use an HB pencil for any diagrams or graphs.
- Write your name, centre number and candidate number in the boxes at the top of the page.
- Write your answer to each question in the space provided.
- Do **not** use an erasable pen or correction fluid.
- Do **not** write on any bar codes.
- You should use a calculator where appropriate.
- You may use tracing paper.
- You must show all necessary working clearly.
- Give non-exact numerical answers correct to 3 significant figures, or 1 decimal place for angles in degrees, unless a different level of accuracy is specified in the question.
- For π, use either your calculator value or 3.142.

INFORMATION

- The total mark for this paper is 130.
- The number of marks for each question or part question is shown in brackets [ ].

This document has **20** pages. Any blank pages are indicated.

© UCLES 2021

1 **(a)** **(i)** Yasmin and Zak share an amount of money in the ratio 21 : 19.
Yasmin receives $6 more than Zak.

View solution

Calculate the total amount of money shared by Yasmin and Zak.

$ ..... [2]

(ii) In a sale, all prices are reduced by 15%.

View solution

(a) Yasmin buys a blouse with an original price of $40.

Calculate the sale price of the blouse.

$ ..... [2]

(b) Zak buys a shirt with a sale price of $29.75 .

Calculate the original price of the shirt.

$ ..... [2]

© UCLES 2021

(b) Xavier's salary increases by 2% each year.
In 2010, his salary was $40 100.

View solution

(i) Calculate his salary in 2015.
Give your answer correct to the nearest dollar.

$ ..... [3]

(ii) In which year is Xavier's salary first greater than $47 500?

View solution

..... [3]

(c) In January 2020, the population of a town was 5% **more** than its population in January 2018.
In January 2021, the population of this town was 2% **less** than its population in January 2020.

View solution

Calculate the overall percentage increase in the population from January 2018 to January 2021.

..... % [2]

© UCLES 2021

2 **(a)** $y = px^2 + t$

View solution

(i) Find the value of y when $p = 3$, $x = 2$ and $t = -13$.

$y =$ ..... [2]

(ii) Rearrange the formula to write x in terms of p, t and y.

View solution

$x =$ ..... [3]

(b) **(i)** Factorise.

$$15x^2 - 2x - 8$$

View solution

..... [2]

(ii) Solve the equation.

$$15x^2 - 2x - 8 = 0$$

View solution

$x =$ ..... or $x =$ ..... [1]

(c) Factorise completely.

$$x^3 - 16xy^2$$

View solution

..... [3]

© UCLES 2021

(d) Simplify. $\dfrac{2x-1-4ax+2a}{2x^2-x}$

View solution

..... [4]

3 **(a)** Zoe's test scores last term were 6 7 7 7 8 9 9 10 10.

View solution

Find

(i) the range,

..... [1]

(ii) the mode,

View solution

..... [1]

(iii) the median.

View solution

..... [1]

(b) The cumulative frequency diagram shows information about the time taken by each of 200 students to solve a problem.

View solution

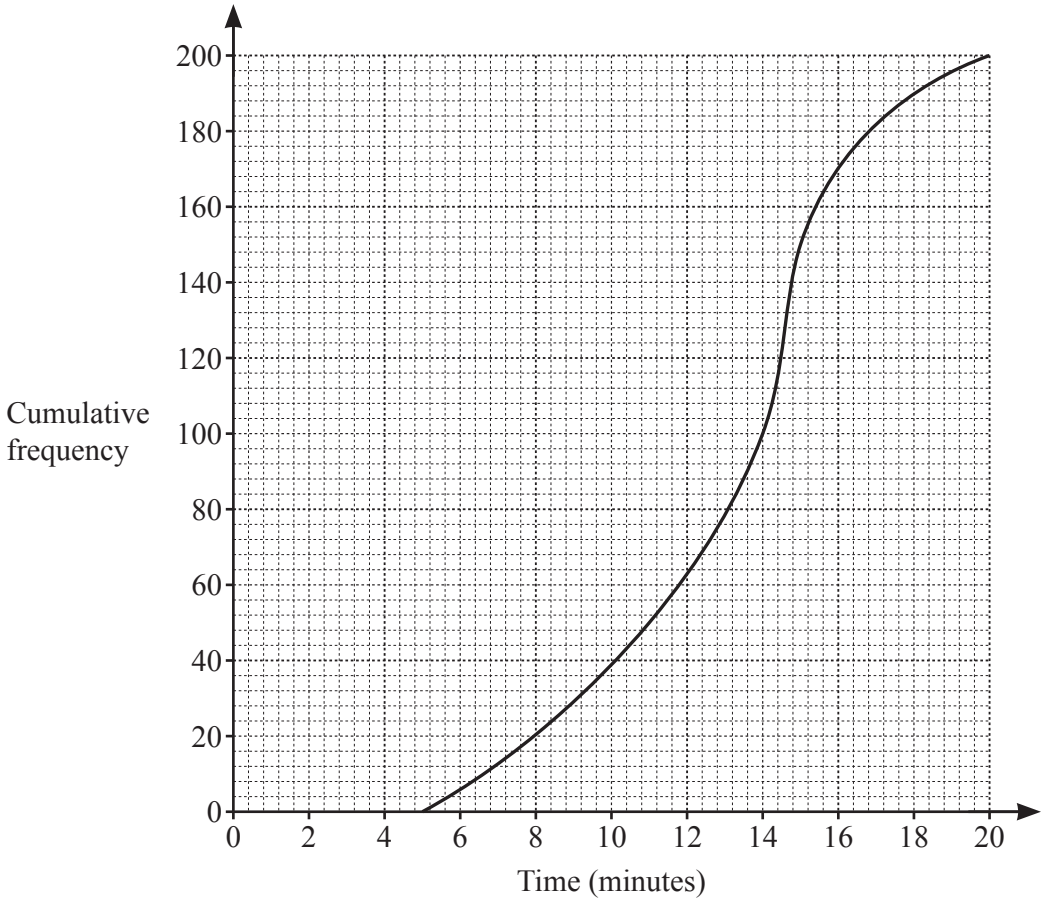

Use the diagram to find an estimate of

(i) the median,

..... min [1]

(ii) the interquartile range.

View solution

..... min [2]

(c) The test scores of 200 students are shown in the table.

View solution

Score	5	6	7	8	9	10
Frequency	3	10	43	75	48	21

Calculate the mean.

..... [3]

(d) The height, in cm, of each of 200 plants is measured.
The histogram shows the results.

View solution

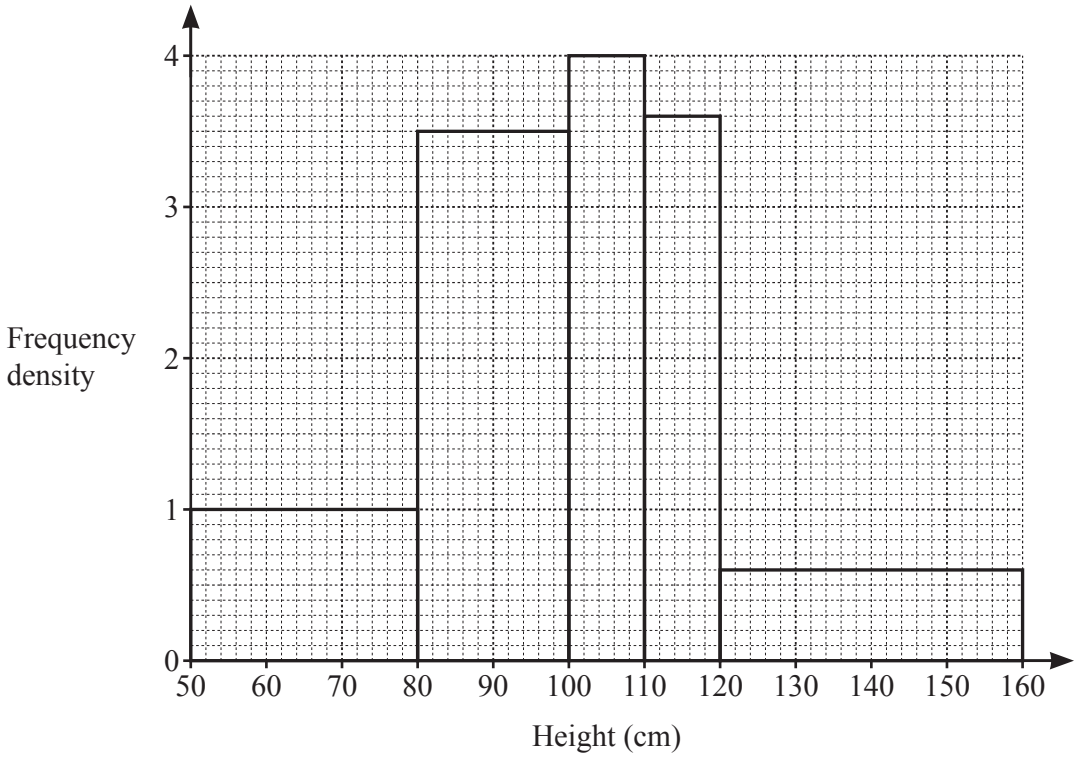

Calculate an estimate of the mean height.
You must show all your working.

..... cm [6]

© UCLES 2021

4 **(a)** A is the point (1, 5) and B is the point (3, 9).
M is the midpoint of AB.

View solution

(i) Find the coordinates of M.

(..... , ...) [2]

(ii) Find the equation of the line that is perpendicular to AB and passes through M.
Give your answer in the form $y = mx + c$.

View solution

$y =$ ..... [4]

(b) The position vector of P is $\begin{pmatrix} -2 \\ 3 \end{pmatrix}$ and the position vector of Q is $\begin{pmatrix} -2 \\ 5 \end{pmatrix}$.

View solution

(i) Find the vector $\overrightarrow{PQ}$.

$\begin{pmatrix} \quad \\ \quad \end{pmatrix}$ [2]

(ii) R is the point such that $\overrightarrow{PR} = 3\overrightarrow{PQ}$.

View solution

Find the position vector of R.

$\begin{pmatrix} \quad \\ \quad \end{pmatrix}$ [2]

© UCLES 2021

(c)

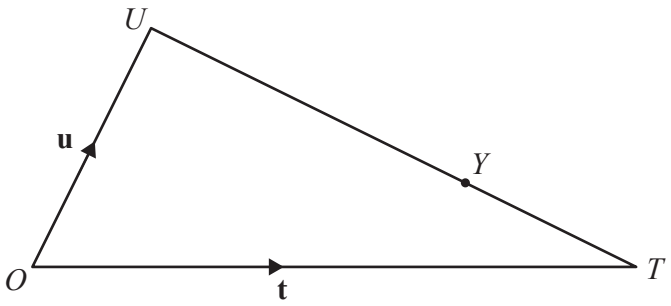

NOT TO SCALE

View solution

$\overrightarrow{OT} = \mathbf{t}$, $\overrightarrow{OU} = \mathbf{u}$ and $UY = 2YT$.

(i) Find $\overrightarrow{OY}$ in terms of **t** and **u**.
Give your answer in its simplest form.

$\overrightarrow{OY} =$ ..... [2]

(ii) Z is on OT and YZ is parallel to UO.

View solution

Find $\overrightarrow{OZ}$ in terms of **t** and/or **u**.
Give your answer in its simplest form.

$\overrightarrow{OZ} =$ ..... [1]

© UCLES 2021

5 Solve the simultaneous equations.

(a) $x + 2y = 13$
$x + 5y = 22$

View solution

$x =$ .....

$y =$ ..... [2]

(b) $y = 2 - x$
$y = x^2 + 2x + 2$

View solution

$x =$ ..... $y =$ .....

$x =$ ..... $y =$ ..... [4]

6 In a class of 24 students, 18 students like homework (H), 15 students like tests (T) and 1 student does not like homework and does not like tests.

(a) Complete the Venn diagram to show this information.

View solution

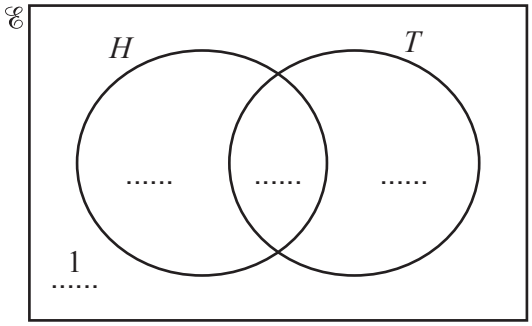

[2]

(b) Write down the number of students who like both homework and tests.

View solution

..... [1]

(c) Find $n(H' \cap T)$.

View solution

..... [1]

(d) A student is picked at random from the class.

Write down the probability that this student likes tests but does not like homework.

View solution

..... [1]

(e) Two students are picked at random from the class.

Find the probability that both students do not like homework and do not like tests.

View solution

..... [1]

(f) Two of the students who like homework are picked at random.

Find the probability that both students also like tests.

View solution

..... [3]

© UCLES 2021

7 **(a)**

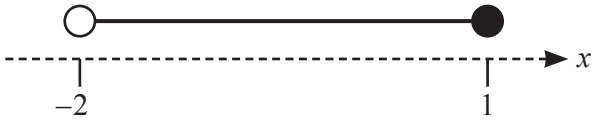

View solution

Write down the inequality in x shown by the number line.

..... [2]

(b) **(i)** Write x^2+4x+1 in the form $(x+p)^2+q$.

View solution

..... [2]

(ii) Use your answer to **part (b)(i)** to solve the equation $x^2+4x+1=0$.

View solution

$x =$ ..... or $x =$ ..... [2]

© UCLES 2021

(iii) Use your answer to **part (b)(i)** to write down the coordinates of the minimum point on the graph of $y = x^2 + 4x + 1$.

View solution

(..... , ...) [2]

(iv) On the diagram, sketch the graph of $y = x^2 + 4x + 1$.

View solution

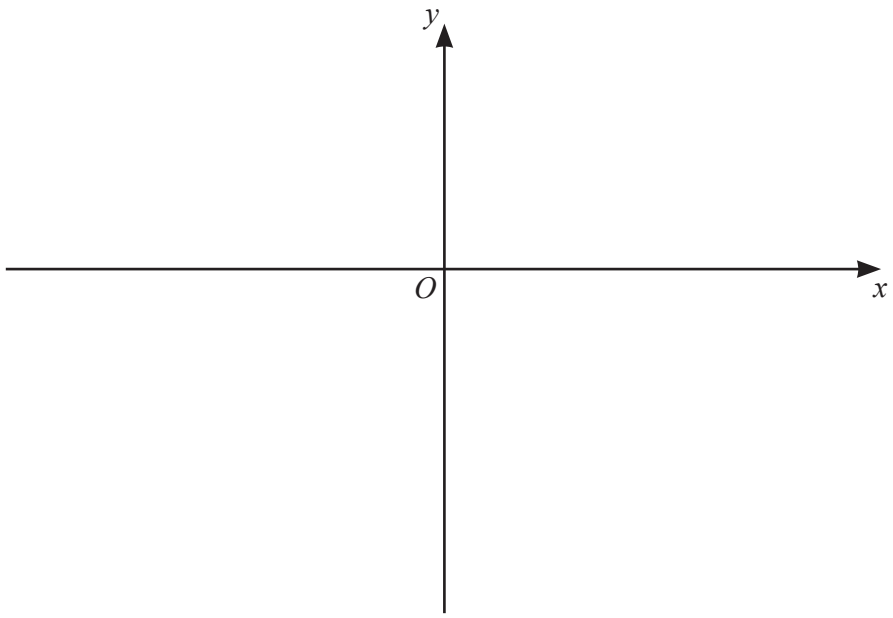

[2]

8 **(a)** A solid cuboid measures 20 cm by 12 cm by 5 cm.

View solution

(i) Calculate the volume of the cuboid.

..... cm^3 [1]

View solution

(ii) **(a)** Calculate the total surface area of the cuboid.

..... cm^2 [3]

(b) The surface of the cuboid is painted.
The cost of the paint used is \$1.52 .

Find the cost to paint $1 cm^2$ of the cuboid.
Give your answer in cents.

..... cents [1]

View solution

(b) A solid metal cylinder with radius x and height $\frac{9x}{2}$ is melted.
All the metal is used to make a sphere with radius r.

Find r in terms of x.

[The volume, V, of a sphere with radius r is $V = \frac{4}{3}\pi r^3$.]

$r =$ ..... [3]

© UCLES 2021

(c)

View solution

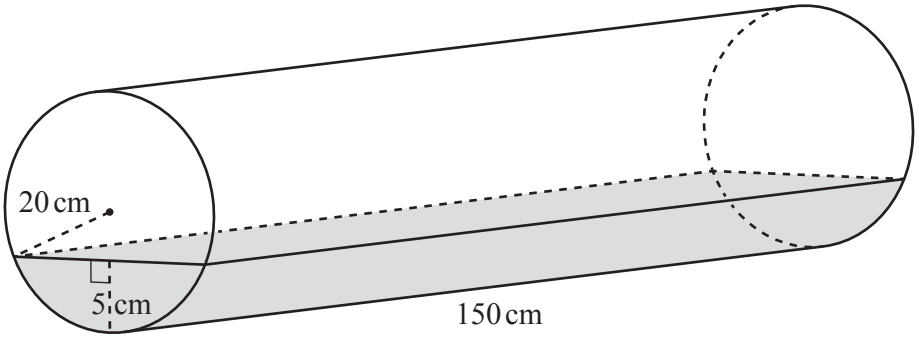

NOT TO SCALE

The diagram shows a cylinder of length 150 cm on horizontal ground.
The cylinder has radius 20 cm.
The cylinder contains water to a depth of 5 cm, as shown in the diagram.

Calculate the volume of water in the cylinder.
Give your answer in litres.

..... litres [7]

9 (a)

View solution

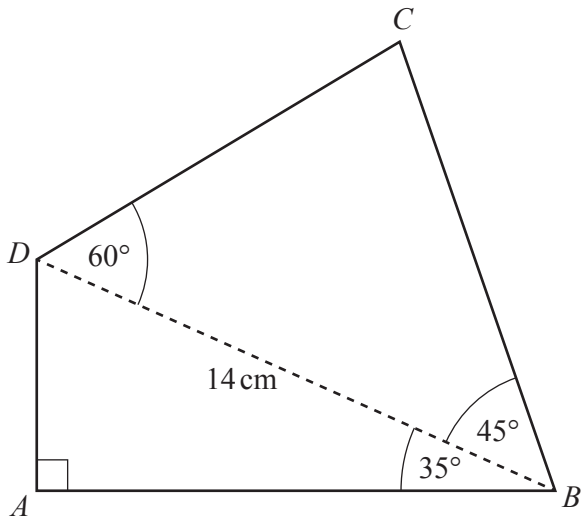

NOT TO SCALE

Calculate the perimeter of the quadrilateral *ABCD*.

..... cm [7]

(b)

View solution

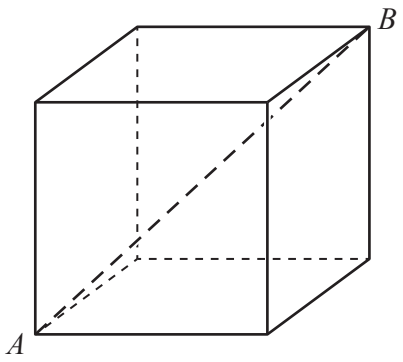

NOT TO SCALE

The diagram shows a cube.
The length of the diagonal AB is 8.5 cm.

(i) Calculate the length of an edge of the cube.

..... cm [3]

(ii) Calculate the angle between AB and the base of the cube.

View solution

..... [3]

10 $f(x) = 3x - 2$ $g(x) = 5x - 7$ $h(x) = x^2 + x$ $j(x) = 3^x$

View solution

(a) Find

(i) f(2),

..... [1]

(ii) g(2),

View solution

..... [1]

(iii) gf(2).

View solution

..... [1]

(b) Find $f^{-1}(x)$.

View solution

$f^{-1}(x) =$ ..... [2]

(c) Find hf(x), giving your answer in the form $ax^2 + bx + c$.

View solution

..... [3]

(d) Find the derivative of h(x).

View solution

..... [1]

(e) **(i)** Find x when $j^{-1}(x) = 4$.

View solution

$x =$ ..... [1]

(ii) Simplify $j^{-1}j(x)$.

View solution

..... [1]

© UCLES 2021

11 **(a)** These are the first four terms of a sequence.

View solution

$$11 \qquad 7 \qquad 3 \qquad -1$$

(i) Write down the next term.

..... [1]

(ii) Write down the term to term rule for this sequence.

View solution

..... [1]

(iii) Find the nth term of this sequence.

View solution

..... [2]

(b) The nth term of a different sequence is $\frac{2n}{n+1}$.

View solution

(i) Find the difference between the 5th term and the 6th term of this sequence.
Give your answer as a fraction.

..... [2]

(ii) Is $\frac{3}{4}$ a term in this sequence?
Show how you decide.

View solution

[3]

BLANK PAGE

Permission to reproduce items where third-party owned material protected by copyright is included has been sought and cleared where possible. Every reasonable effort has been made by the publisher (UCLES) to trace copyright holders, but if any items requiring clearance have unwittingly been included, the publisher will be pleased to make amends at the earliest possible opportunity.

To avoid the issue of disclosure of answer-related information to candidates, all copyright acknowledgements are reproduced online in the Cambridge Assessment International Education Copyright Acknowledgements Booklet. This is produced for each series of examinations and is freely available to download at www.cambridgeinternational.org after the live examination series.

Cambridge Assessment International Education is part of the Cambridge Assessment Group. Cambridge Assessment is the brand name of the University of Cambridge Local Examinations Syndicate (UCLES), which itself is a department of the University of Cambridge.

© UCLES 2021