Cambridge Assessment International Education

Cambridge IGCSE™

CANDIDATE NAME									
CENTRE NUMBER						CANDIDATE NUMBER			

MATHEMATICS **0580/33**

Paper 3 (Core) **May/June 2022**

2 hours

You must answer on the question paper.

You will need: Geometrical instruments

INSTRUCTIONS

- Answer **all** questions.
- Use a black or dark blue pen. You may use an HB pencil for any diagrams or graphs.
- Write your name, centre number and candidate number in the boxes at the top of the page.
- Write your answer to each question in the space provided.
- Do **not** use an erasable pen or correction fluid.
- Do **not** write on any bar codes.
- You should use a calculator where appropriate.
- You may use tracing paper.
- You must show all necessary working clearly.
- Give non-exact numerical answers correct to 3 significant figures, or 1 decimal place for angles in degrees, unless a different level of accuracy is specified in the question.
- For π, use either your calculator value or 3.142.

INFORMATION

- The total mark for this paper is 104.
- The number of marks for each question or part question is shown in brackets [ ].

This document has **20** pages. Any blank pages are indicated.

© UCLES 2022

1 The diagram shows three quadrilaterals on a 1 cm^2 grid.

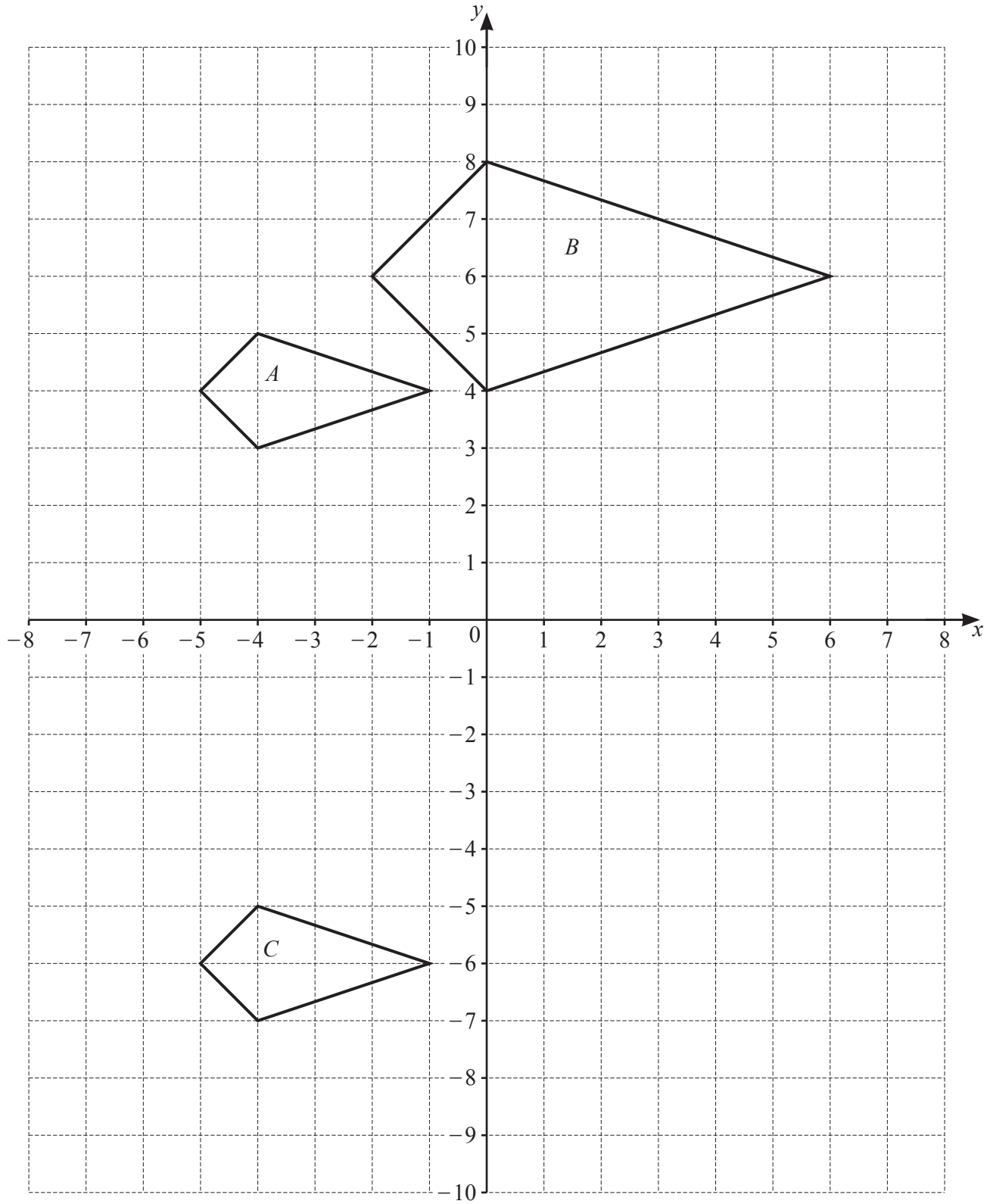

View solution

(a) Write down the mathematical name of quadrilateral A.

..... [1]

(b) Find the area of quadrilateral A.

View solution

..... cm^2 [1]

(c) Describe fully the **single** transformation that maps quadrilateral A onto

View solution

(i) quadrilateral B,

.....

..... [3]

(ii) quadrilateral C.

View solution

.....

..... [2]

(d) On the grid, draw the image of

View solution

(i) quadrilateral C after a 90° anticlockwise rotation about the origin, [2]

(ii) quadrilateral C after a reflection in the line $x = 1$. [2]

View solution

2 **(a)**

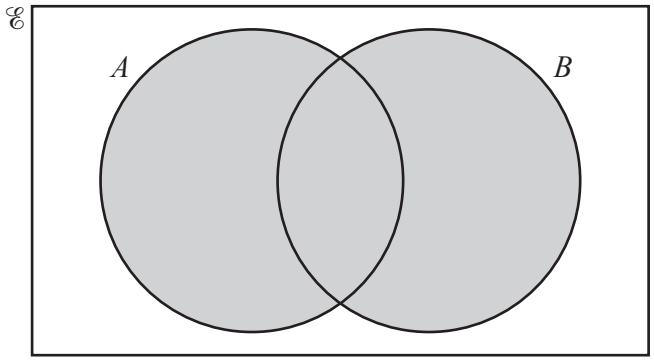

Use set notation to describe the shaded region.

..... [1]

(b) $\mathscr{E} = \{x : x \text{ is a natural number} \leqslant 16\}$

(i) Write down all the square numbers in the universal set, $\mathscr{E}$.

..... [2]

(ii) Write down the six prime numbers in the universal set, $\mathscr{E}$.

....., ..., ..., ..., ..., ... [2]

(iii) $M = \{x : x \text{ is a multiple of } 3\}$
$F = \{x : x \text{ is a factor of } 15\}$

(a) Complete the Venn diagram to show the elements of these sets.

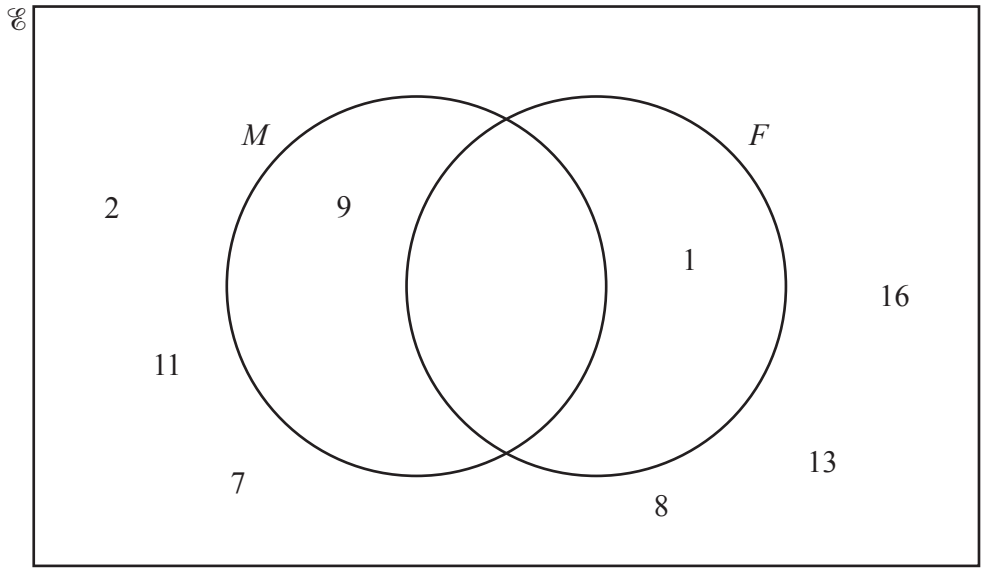

[2]

(b) Write down all the odd numbers that are not in set M and not in set F.

..... [1]

(c) Find $\mathrm{n}(M \cap F)$.

..... [1]

(d) A number is chosen at random from the universal set, $\mathscr{E}$.

Find the probability that this number is in set F.

..... [1]

3 Mr Zhang, his wife and three children go on a holiday from Shanghai to Auckland.

(a) The flight for an adult costs \$630.
The cost for a child is $\frac{5}{8}$ of the adult cost.

View solution

Show that the total cost of the flight for the family is \$2441, correct to the nearest dollar.

[3]

(b) The plane leaves Shanghai at 2005 local time on 13th November.
The plane stops for 2 hours 30 minutes in Sydney.
The plane lands in Auckland at 1725 local time on 14th November.
The local time in Auckland is 5 hours ahead of the local time in Shanghai.

View solution

(i) Work out how long the plane is flying, in hours and minutes.

..... h ..... min [3]

(ii) Write your answer to **part (b)(i)** in hours, correct to 3 decimal places.

View solution

..... h [1]

© UCLES 2022

(iii) The flight distance from Shanghai to Sydney is 7882 km.
The flight distance from Sydney to Auckland is 2156 km.

View solution

Find the total distance the plane flies.

..... km [1]

(iv) Calculate the average speed of the plane when it is flying.

View solution

..... km/h [2]

(c) The holiday expenses are in the ratio
hotel : car hire : food = 8 : 5 : 6.

View solution

The cost of the hotel is $2400.

Show that the total of the holiday expenses is $5700.

[2]

4

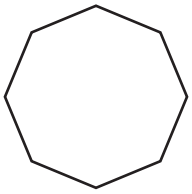

The diagram shows a regular polygon.

(a) (i) Write down the mathematical name of this polygon.

View solution

..... [1]

(ii) Show that the interior angle of this polygon is 135°.

View solution

[2]

(b) A sequence of diagrams is made by joining these polygons.

View solution

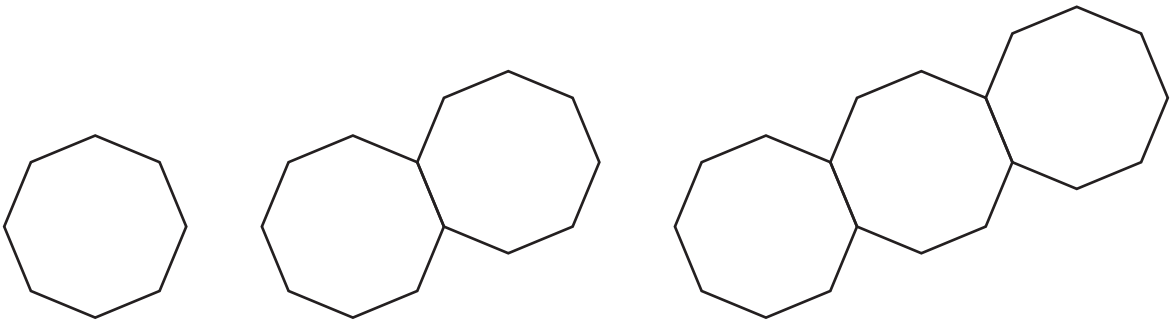

Diagram 1 Diagram 2 Diagram 3

(i) Complete the table.

Diagram number	1	2	3	4	5
Number of lines	8	15			

[3]

(ii) Write down the term to term rule for the number of lines in the sequence.

View solution

..... [1]

(iii) Work out the number of lines in Diagram 9.

View solution

..... [1]

(iv) Find an expression, in terms of n, for the number of lines in Diagram n.

View solution

..... [2]

(v) Diagram k has 113 lines.

Find the value of k.

View solution

$k =$ ..... [2]

5 **(a)** Work out the number of days in seven weeks.

View solution

..... days [1]

(b) The summit of Mount Everest is 8848 metres above sea level.
Ayding Lake is 154 metres below sea level.

Work out the difference in height between these places.

View solution

..... m [1]

(c) Find two integers that have a sum of -12 and a product of 32.

View solution

..... and ..... [1]

(d) Write $\frac{3}{8}$ as

(i) a decimal,

View solution

..... [1]

(ii) a percentage.

View solution

..... % [1]

(e) Write down the reciprocal of $\frac{1}{9}$.

View solution

..... [1]

(f) Find the value of

(i) 4^5,

View solution

..... [1]

(ii) $\sqrt[3]{512}$.

View solution

..... [1]

© UCLES 2022

(g) **(i)** Write 587 000 in standard form.

View solution

..... [1]

(ii) Calculate $4.9 \times 10^{-3} + 8.1 \times 10^{-4}$.
Give your answer in standard form.

View solution

..... [1]

(h) The height, h metres, of a fence post is 2.43 m, correct to the nearest centimetre.

View solution

Complete the statement about the value of h.

..... $\leqslant h <$ ..... [2]

6 Maria owns a restaurant with 30 tables.
One day she records the number of customers at each table at 7 pm.
The bar chart shows the results.

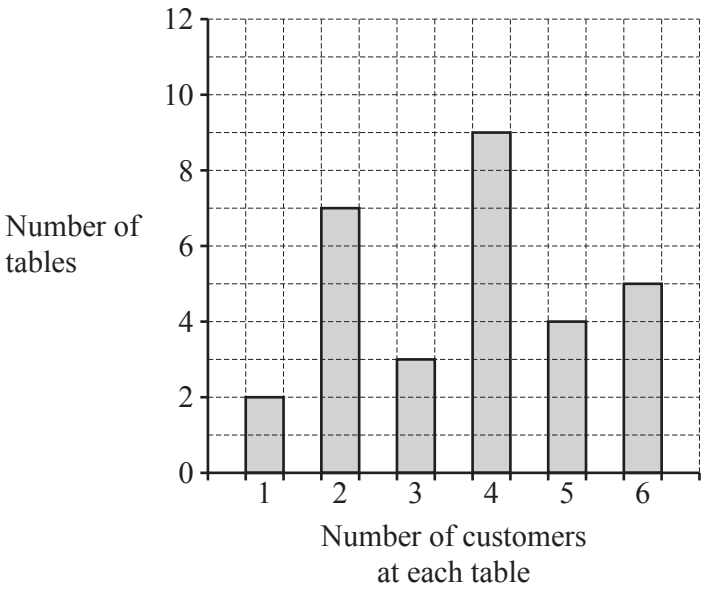

(a) (i) Write down the mode.

View solution

..... [1]

(ii) Find the range.

View solution

..... [1]

(iii) Calculate the mean.

View solution

..... [3]

(b) On the same day she also recorded the number of customers at each table at 1 pm.
The results are shown in the table.

View solution

Number of customers at each table	1	2	3	4	5	6
Number of tables	8	13	5	4	0	0

Write down two comments comparing the results from 7 pm with the results from 1 pm.

1. .....

2. ..... [2]

(c) 270 meals are ordered one day at the restaurant.
The table shows the number of each type of meal.

View solution

Meal	Number ordered	Pie chart sector angle
Meat	117	
Fish	99	
Vegetarian	54	72°

(i) Complete the table.

[2]

View solution

(ii) Complete the pie chart.

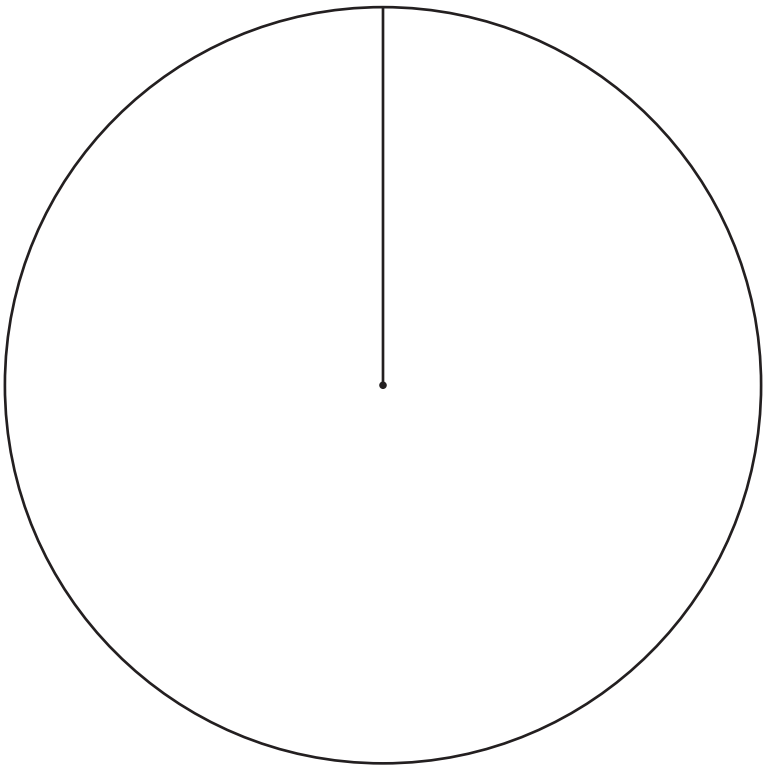

[2]

7 **(a)** Complete the table of values for $y = \frac{15}{x}$, $x \neq 0$.

View solution

x	-15	-10	-5	-3	-2	-1	1	2	3	5	10	15
y		-1.5		-5		-15	15		5			

[3]

(b) On the grid, draw the graph of $y = \frac{15}{x}$ for $-15 \leqslant x \leqslant -1$ and $1 \leqslant x \leqslant 15$.

View solution

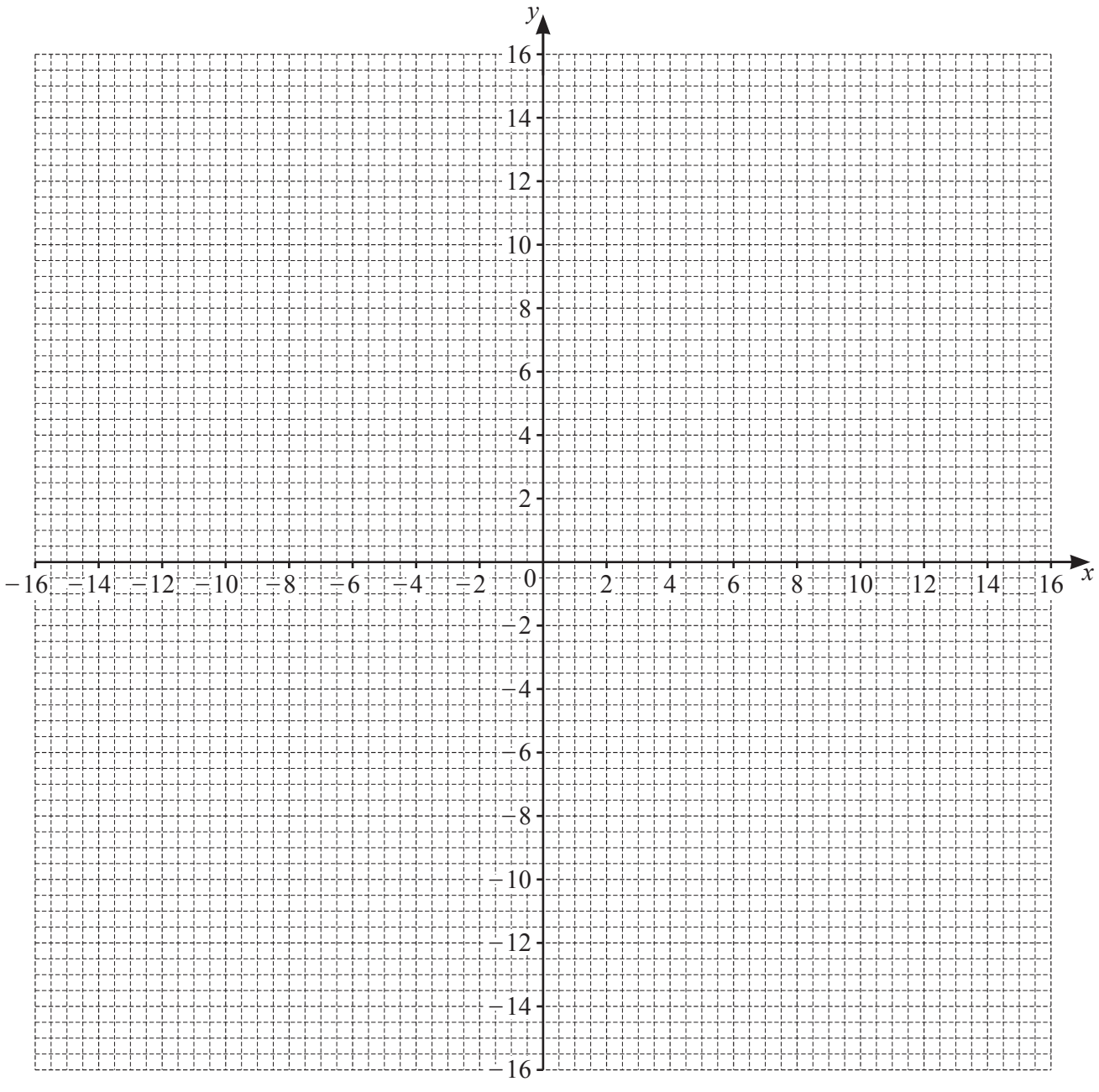

[4]

(c) Write down the order of rotational symmetry of the graph.

View solution

..... [1]

(d) (i) On the grid, draw the lines of symmetry of the graph. [2]

(ii) Write down the equation of the line of symmetry that does **not** intersect the graph.

View solution

..... [1]

(e) Use your graph to solve the equation $\frac{15}{x} = -6$.

View solution

$x =$ ..... [1]

8 (a)

View solution

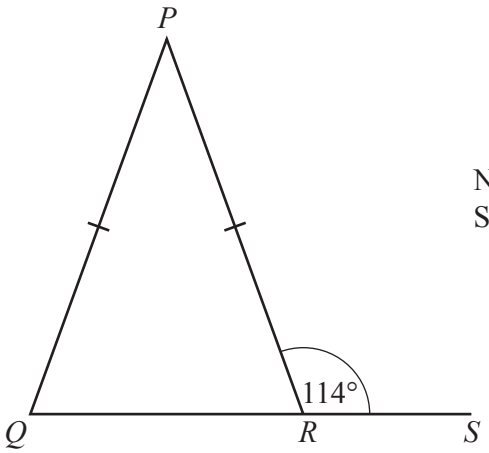

NOT TO SCALE

In the diagram, $PQ = PR$ and QRS is a straight line.

(i) Write down the mathematical name of triangle PQR.

..... [1]

(ii) Work out angle QPR.

View solution

Angle QPR = ... [3]

(b)

View solution

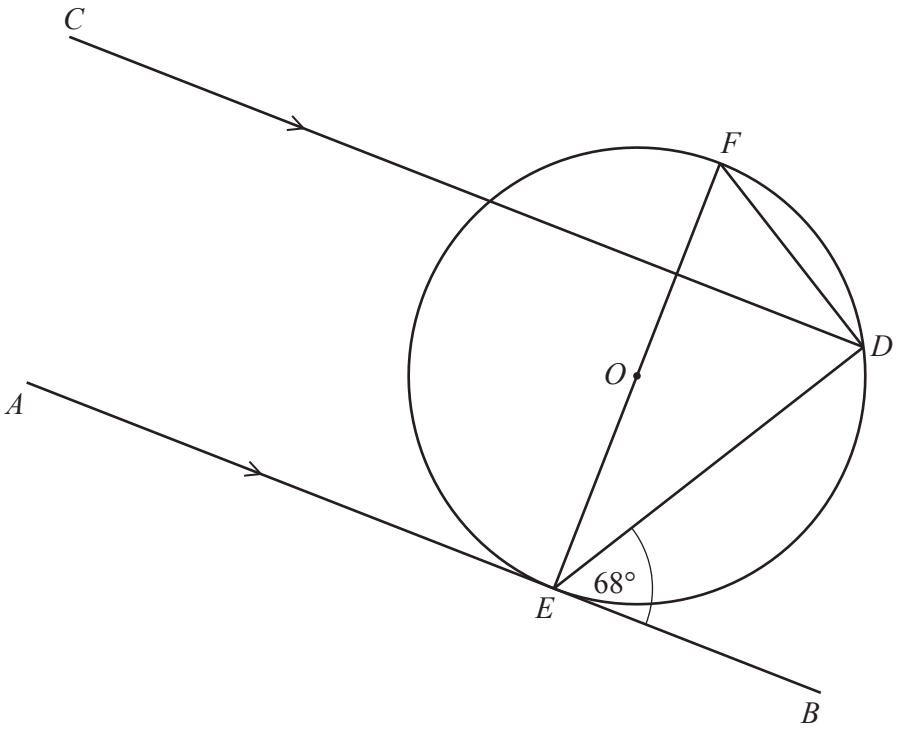

NOT TO SCALE

In the diagram, D, E and F are points on a circle, centre O.
AB is a tangent to the circle at E.
Lines AB and CD are parallel and angle $BED = 68°$.

(i) Find angle *CDE* and give a reason for your answer.

Angle *CDE* = ... because .....

..... [2]

(ii) Find angle *DEF* and give a reason for your answer.

View solution

Angle *DEF* = ... because .....

..... [2]

(iii) Work out angle *EFD*.
Write down the two further geometrical properties needed to find angle *EFD*.

View solution

Angle *EFD* = ...

1. .....

2. ..... [3]

(c)

View solution

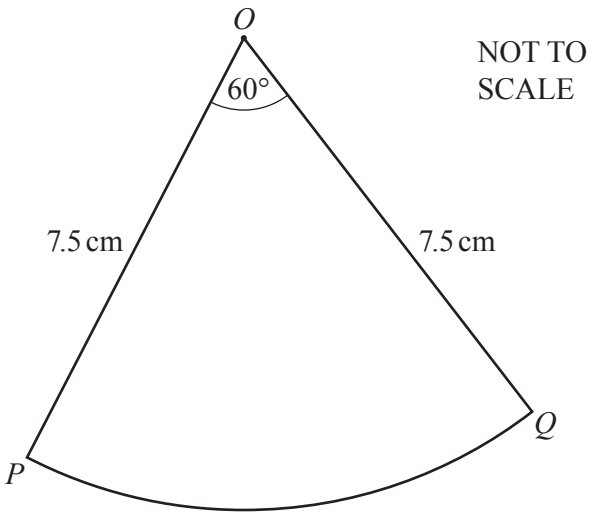

POQ is a sector of a circle, centre *O* and radius 7.5 cm.
The sector angle is 60°.

Calculate the length of the arc *PQ*.

PQ = ... cm [2]

9 Ahmed owns a company.

(a) (i) Each year he earns \$56 000 plus 3% of the year's profit.

View solution

Calculate the amount he earns in a year when the profit is \$320 600.

\$ ..... [2]

(ii) In the following year the profit is \$347 851.

View solution

Calculate the percentage increase in the profit.

..... % [2]

(b) Ahmed employs three people, Budi, Citra and Dian.
Budi earns \$17 000, Citra earns \$13 600 and Dian earns \$6800.

View solution

Find the ratio of their earnings in its simplest form.

Budi : Citra : Dian = ... : ..... : ..... [2]

© UCLES 2022

(c) Ahmed buys materials from China costing 7560 yuan.

View solution

Work out the cost of the materials in dollars when the exchange rate is \$1 = 7.06 yuan.
Give your answer correct to the nearest dollar.

\$ ..... [2]

(d) Ahmed borrows \$8 000 for 3 years at a rate of 5% per year compound interest.

View solution

Calculate the amount of interest he will pay at the end of the 3 years.

\$ ..... [3]

© UCLES 2022

BLANK PAGE

Permission to reproduce items where third-party owned material protected by copyright is included has been sought and cleared where possible. Every reasonable effort has been made by the publisher (UCLES) to trace copyright holders, but if any items requiring clearance have unwittingly been included, the publisher will be pleased to make amends at the earliest possible opportunity.

To avoid the issue of disclosure of answer-related information to candidates, all copyright acknowledgements are reproduced online in the Cambridge Assessment International Education Copyright Acknowledgements Booklet. This is produced for each series of examinations and is freely available to download at www.cambridgeinternational.org after the live examination series.

Cambridge Assessment International Education is part of Cambridge Assessment. Cambridge Assessment is the brand name of the University of Cambridge Local Examinations Syndicate (UCLES), which is a department of the University of Cambridge.

© UCLES 2022