Cambridge Assessment International Education

Cambridge IGCSE™

CANDIDATE NAME									
CENTRE NUMBER						CANDIDATE NUMBER			

MATHEMATICS **0580/43**

Paper 4 (Extended) **May/June 2022**

2 hours 30 minutes

You must answer on the question paper.

You will need: Geometrical instruments

INSTRUCTIONS

- Answer **all** questions.
- Use a black or dark blue pen. You may use an HB pencil for any diagrams or graphs.
- Write your name, centre number and candidate number in the boxes at the top of the page.
- Write your answer to each question in the space provided.
- Do **not** use an erasable pen or correction fluid.
- Do **not** write on any bar codes.
- You should use a calculator where appropriate.
- You may use tracing paper.
- You must show all necessary working clearly.
- Give non-exact numerical answers correct to 3 significant figures, or 1 decimal place for angles in degrees, unless a different level of accuracy is specified in the question.
- For π, use either your calculator value or 3.142.

INFORMATION

- The total mark for this paper is 130.
- The number of marks for each question or part question is shown in brackets [ ].

© UCLES 2022

1 Here is part of a bus timetable.

Abbots	06 50	08 25	09 20
Callet	07 12	08 47	09 42
North Moor	07 30	09 05	10 00
South Moor	07 37	09 12	10 07
Centre Point	08 00	09 35	10 30

(a) Rashid catches the 09 20 bus at Abbots.

View solution

Find the time the bus arrives at South Moor.

..... [1]

(b) Annisa leaves home at 8.27 am and takes 25 minutes to walk to the bus stop at Callet.
She catches the next bus to Centre Point.

View solution

Find the total time, in minutes, for her journey from leaving home to arriving at Centre Point.

..... min [2]

(c) The distance from Abbots to Centre Point is 29.4 km.
Each bus takes the same time for the journey.

View solution

Calculate the average speed of a bus for this journey.
Give your answer in kilometres per hour.

..... km/h [2]

(d) On one journey, all 56 seats on the bus are filled.
The ratio of adults to children on this journey is adults : children = 5 : 3.
The cost for an adult ticket is \$2.80 .
The cost for a child ticket is $\frac{3}{4}$ of the adult cost.

View solution

Work out the total cost of the tickets for this journey.

\$ ..... [4]

© UCLES 2022

2 (a)

View solution

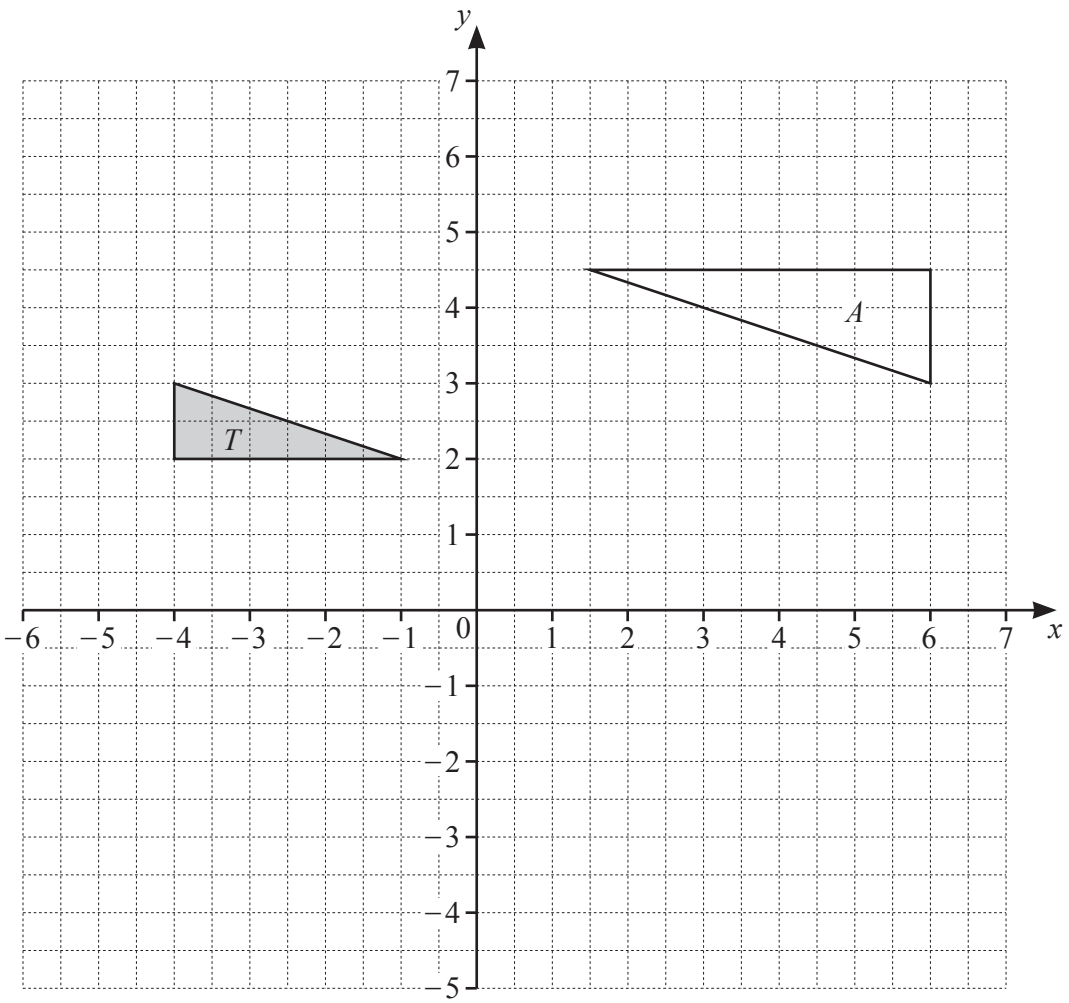

(i) Draw the image of triangle T after a reflection in the line $y = x$. [2]

(ii) Draw the image of triangle T after a translation by the vector $\begin{pmatrix} -1 \\ 3 \end{pmatrix}$. [2]

(iii) Describe fully the **single** transformation that maps triangle T onto triangle A.

.....

..... [3]

(b) A quadrilateral P is enlarged by a scale factor of 1.2 to give quadrilateral Q.
The area of quadrilateral P is $20\,\text{cm}^2$.

View solution

Calculate the area of quadrilateral Q.

..... cm^2 [2]

© UCLES 2022

3 **(a)** The table shows the numbers of tigers reported to be living in the wild in the year 2014 in some countries.

View solution

Country	Number
India	2226
Indonesia	371
Nepal	198
Bangladesh	106

(i) Using the table,

(a) find the number of tigers in Nepal as a percentage of the number of tigers in Bangladesh,

..... % [1]

(b) find the ratio tigers in Bangladesh : tigers in Indonesia : tigers in India, giving your answer in its simplest form.

..... : ..... : ..... [2]

(ii) Five years later, the number of tigers reported in India was 2967.

View solution

Find the percentage increase in the population of tigers in India.

..... % [2]

(iii) The number of tigers in India in the year 2014 is approximately 30.48% greater than in the year 2010.

View solution

Find the number of tigers in India in the year 2010.
Give your answer correct to the nearest integer.

..... [3]

© UCLES 2022

(b) At the start of June, a hive has a population of 2000 bees.
Three months after the start of June the hive has a population of 2662 bees.

View solution

The population of this hive can be calculated using the formula

$$P = ab^x,$$

where P is the population of the hive x months after the start of June.

By finding the value of a and the value of b, calculate the population of the hive 7 months after the start of June.
Give your answer correct to the nearest integer.

..... [5]

© UCLES 2022

4 A regular 12-sided polygon has side length 6 cm.

(a) Show that one interior angle of the polygon is 150°.

View solution

[1]

(b) The polygon is enclosed by a circle, centre O, so that each vertex touches the circumference of the circle.

View solution

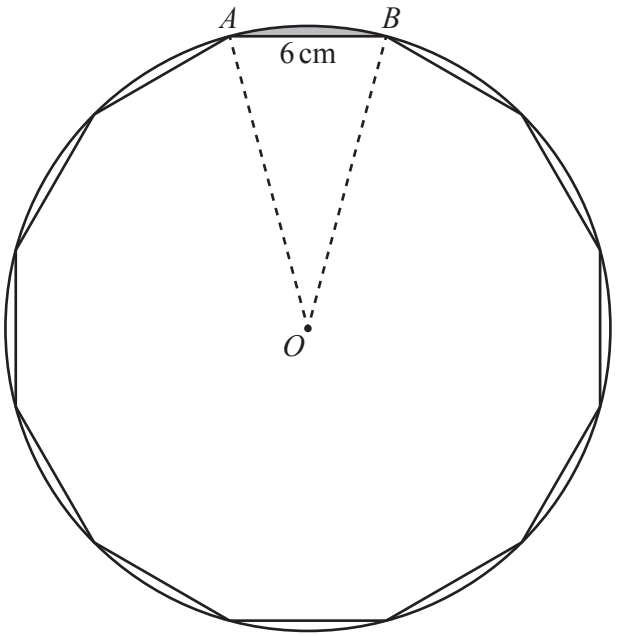

NOT TO SCALE

(i) Show that the radius, AO, of the circle is 11.6 cm, correct to 1 decimal place.

[3]

© UCLES 2022

(ii) Calculate

(a) the circumference of the circle,

View solution

..... cm [2]

(b) the perimeter of the shaded **minor** segment formed by the chord AB.

..... cm [2]

(c) The regular 12-sided polygon is the cross-section of a prism of length 2 cm.

View solution

Calculate the volume of the prism.

..... cm^3 [3]

© UCLES 2022

5 The time, t minutes, taken by each of 80 people to travel to work is recorded.
The table shows information about these times.

Time (t minutes)	$0 < t \leqslant 5$	$5 < t \leqslant 10$	$10 < t \leqslant 20$	$20 < t \leqslant 35$	$35 < t \leqslant 60$
Frequency	3	7	18	28	24

(a) (i) Write down the class interval containing the median time.

View solution

..... $< t \leqslant$ ..... [1]

(ii) Calculate an estimate of the mean time.

View solution

..... min [4]

(b) (i) One of these 80 people is chosen at random.

View solution

Find the probability that this person took longer than 10 minutes to travel to work.
Give your answer as a fraction in its simplest form.

..... [2]

(ii) Two people are chosen at random from those taking 20 minutes or less to travel to work.

Calculate the probability that one of these people took 5 minutes or less and the other took more than 5 minutes.

View solution

..... [3]

© UCLES 2022

(c) (i) Use the frequency table on page 8 to complete the cumulative frequency table.

View solution

Time (t minutes)	$t \leqslant 5$	$t \leqslant 10$	$t \leqslant 20$	$t \leqslant 35$	$t \leqslant 60$
Cumulative frequency	3	10			80

[1]

(ii) On the grid, draw a cumulative frequency diagram to show this information.

View solution

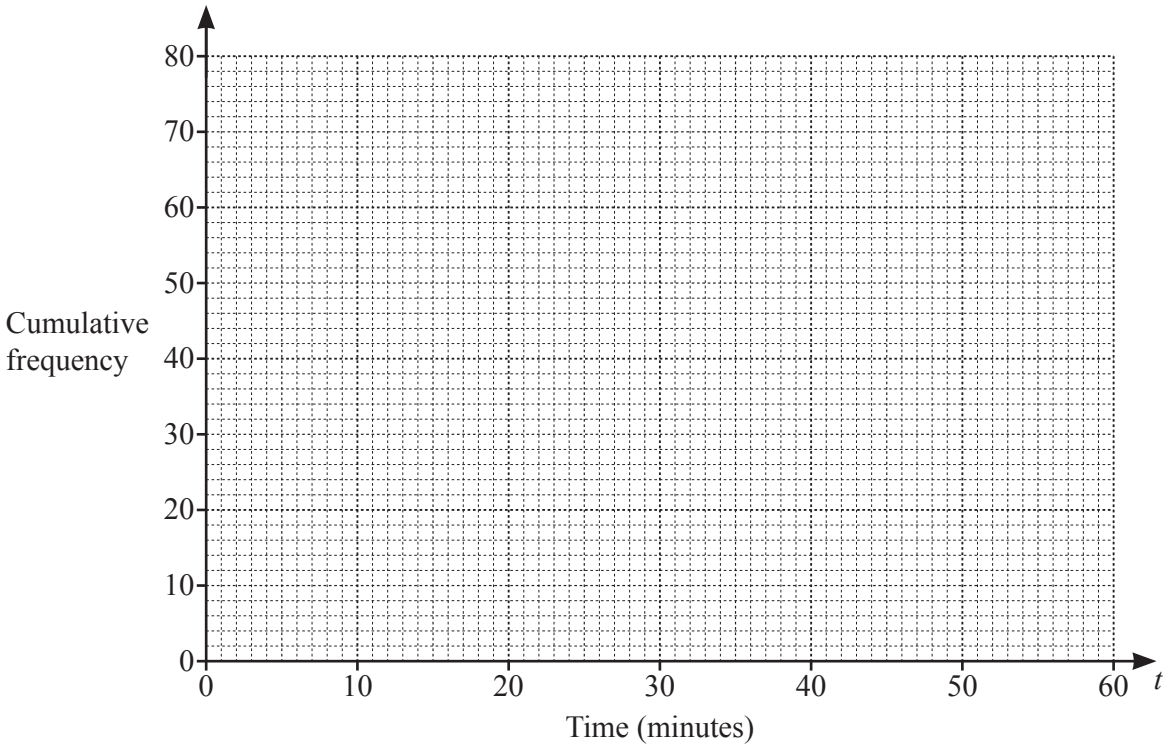

[3]

(iii) Find an estimate for the 80th percentile.

View solution

..... min [2]

(iv) Find an estimate for the percentage of people who took longer than 45 minutes to travel to work.
Show all your working.

View solution

..... % [3]

6 **(a)** Simplify.

$$a-2b-3a+7b$$

View solution

..... [2]

(b) Expand and simplify.

$$4(x-5)-(3-2x)$$

View solution

..... [2]

(c) Write as a single fraction in its simplest form.

$$\frac{3}{x-5}-\frac{7}{2x}$$

View solution

..... [3]

(d) Solve.

$$\frac{13-4x}{3}=6-x$$

View solution

$x =$ ..... [3]

© UCLES 2022

(e) Make x the subject of the formula.

$$y = \frac{5(p-2x)}{x}$$

View solution

$x =$ ..... [4]

7

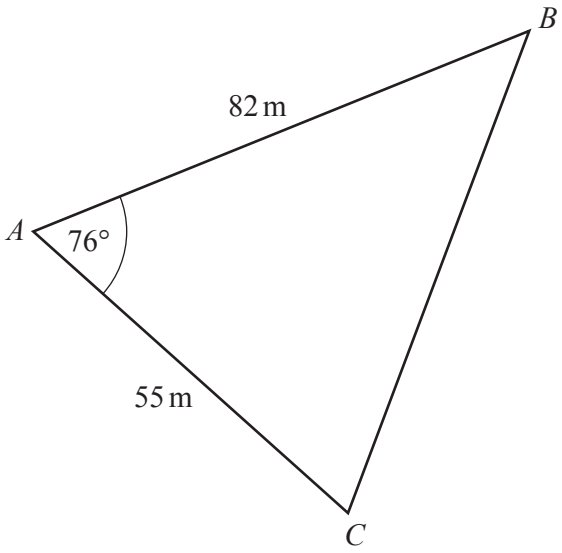

NOT TO SCALE

The diagram shows a field ABC.

(a) Calculate BC.

View solution

$BC =$ ..... m [3]

(b) Calculate angle ACB.

View solution

Angle $ACB =$ ..... [3]

(c) A gate, G, lies on AB at the shortest distance from C.

View solution

Calculate AG.

$AG =$ ..... m [3]

(d) A different triangular field PQR has the same area as ABC.
$PQ = 90$ m and $QR = 60$ m.

View solution

Work out the two possible values of angle PQR.

Angle $PQR =$ ..... or ..... [5]

© UCLES 2022

8 **(a)** A has coordinates $(-2,7)$, B has coordinates $(1,-5)$ and C has coordinates $(5,4)$.

View solution

(i) Find the coordinates of the midpoint of the line AB.

(..... , ...) [2]

(ii) Find $\overrightarrow{AC}$.

View solution

$\overrightarrow{AC} = \begin{pmatrix} \\ \end{pmatrix}$ [2]

(iii) Find $\left|\overrightarrow{AC}\right|$.

View solution

..... [2]

(iv) Find the equation of the line AB.
Give your answer in the form $y = mx + c$.

View solution

$y =$ ..... [3]

© UCLES 2022

(v) Find the equation of the line perpendicular to AB that passes through C.
Give your answer in the form $y = mx + c$.

View solution

$y =$ ..... [3]

(b) The graphs of $y + 5x = 8$ and $y = 2x^2 + 6x - 13$ intersect at the points P and Q.

View solution

Find the coordinates of P and the coordinates of Q.
Show all your working.

P (..... , ...)

Q (..... , ...) [6]

© UCLES 2022

9 **(a)** Sketch the graph of $y = (x+1)(3-x)(3+x)$, indicating the coordinates of the points where the graph crosses the x-axis and the y-axis.

View solution

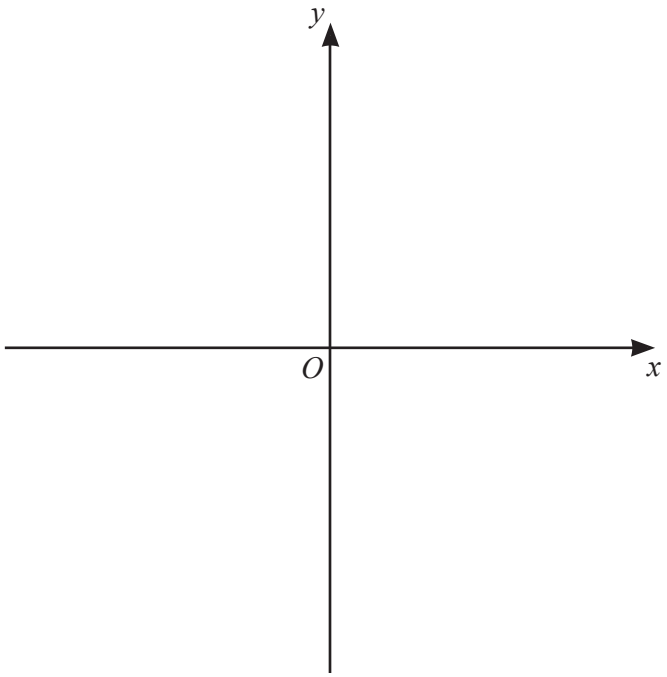

[4]

(b) **(i)** Show that $y = (x+1)(3-x)(3+x)$ can be written as $y = 9+9x-x^2-x^3$.

View solution

[2]

(ii) Calculate the x–values of the turning points of $y = 9 + 9x - x^2 - x^3$.
Show all your working and give your answers correct to 2 decimal places.

View solution

$x =$ ....., $x =$ ..... [7]

(iii) The equation $9 + 9x - x^2 - x^3 = k$ has one solution only when $k < a$ and when $k > b$, where a and b are integers.

View solution

Find the maximum value of a and the minimum value of b.

$a =$ .....

$b =$ ..... [3]

© UCLES 2022

10

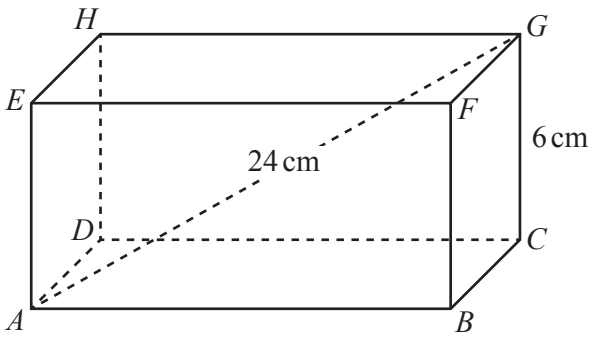

NOT TO SCALE

The diagram shows a cuboid $ABCDEFGH$.
$CG = 6$ cm, $AG = 24$ cm and $AB = 2BC$.

(a) Calculate AB.

View solution

$AB =$ ..... cm [4]

(b) Calculate the angle between AG and the base $ABCD$.

View solution

..... [3]

© UCLES 2022

BLANK PAGE

BLANK PAGE

Permission to reproduce items where third-party owned material protected by copyright is included has been sought and cleared where possible. Every reasonable effort has been made by the publisher (UCLES) to trace copyright holders, but if any items requiring clearance have unwittingly been included, the publisher will be pleased to make amends at the earliest possible opportunity.

To avoid the issue of disclosure of answer-related information to candidates, all copyright acknowledgements are reproduced online in the Cambridge Assessment International Education Copyright Acknowledgements Booklet. This is produced for each series of examinations and is freely available to download at www.cambridgeinternational.org after the live examination series.

Cambridge Assessment International Education is part of Cambridge Assessment. Cambridge Assessment is the brand name of the University of Cambridge Local Examinations Syndicate (UCLES), which is a department of the University of Cambridge.

© UCLES 2022