Cambridge Assessment International Education

Cambridge IGCSE™

CANDIDATE NAME									
CENTRE NUMBER						CANDIDATE NUMBER				

MATHEMATICS **0580/31**

Paper 3 (Core) **May/June 2023**

2 hours

You must answer on the question paper.

You will need: Geometrical instruments

INSTRUCTIONS

- Answer **all** questions.
- Use a black or dark blue pen. You may use an HB pencil for any diagrams or graphs.
- Write your name, centre number and candidate number in the boxes at the top of the page.
- Write your answer to each question in the space provided.
- Do **not** use an erasable pen or correction fluid.
- Do **not** write on any bar codes.
- You should use a calculator where appropriate.
- You may use tracing paper.
- You must show all necessary working clearly.
- Give non-exact numerical answers correct to 3 significant figures, or 1 decimal place for angles in degrees, unless a different level of accuracy is specified in the question.
- For π, use either your calculator value or 3.142.

INFORMATION

- The total mark for this paper is 104.
- The number of marks for each question or part question is shown in brackets [ ].

This document has **20** pages. Any blank pages are indicated.

© UCLES 2023

1 **(a)** Write the number forty thousand and thirty-three in figures.

View solution

..... [1]

(b) Find the value of $\sqrt[3]{729}$.

View solution

..... [1]

(c) Find the reciprocal of $\frac{7}{9}$.
Give your answer as a decimal, correct to 3 decimal places.

View solution

..... [2]

(d) Find the value of $6^5 \div 3^4$.

View solution

..... [2]

(e) Work out $(-9) \times (-7) \div (-3)$.

View solution

..... [1]

(f) Work out.

(i) $11 + 9 \times 5 - 4$

View solution

..... [1]

(ii) $(11 + 9) \times 5 - 4$

View solution

..... [1]

© UCLES 2023

(g) -0.67 $\sqrt{123}$ $\sqrt{49}$ $\frac{5}{9}$ 3.142

View solution

From this list, write down an irrational number.

..... [1]

(h) (i) Find the lowest common multiple (LCM) of 24 and 104.

View solution

..... [2]

(ii) Find the highest common factor (HCF) of 24 and 104.

View solution

..... [2]

2 **(a)** Complete this statement.

View solution

The mathematical name of any polygon with 4 sides is a ..... [1]

(b) Three of these shapes are shown on the grid.

View solution

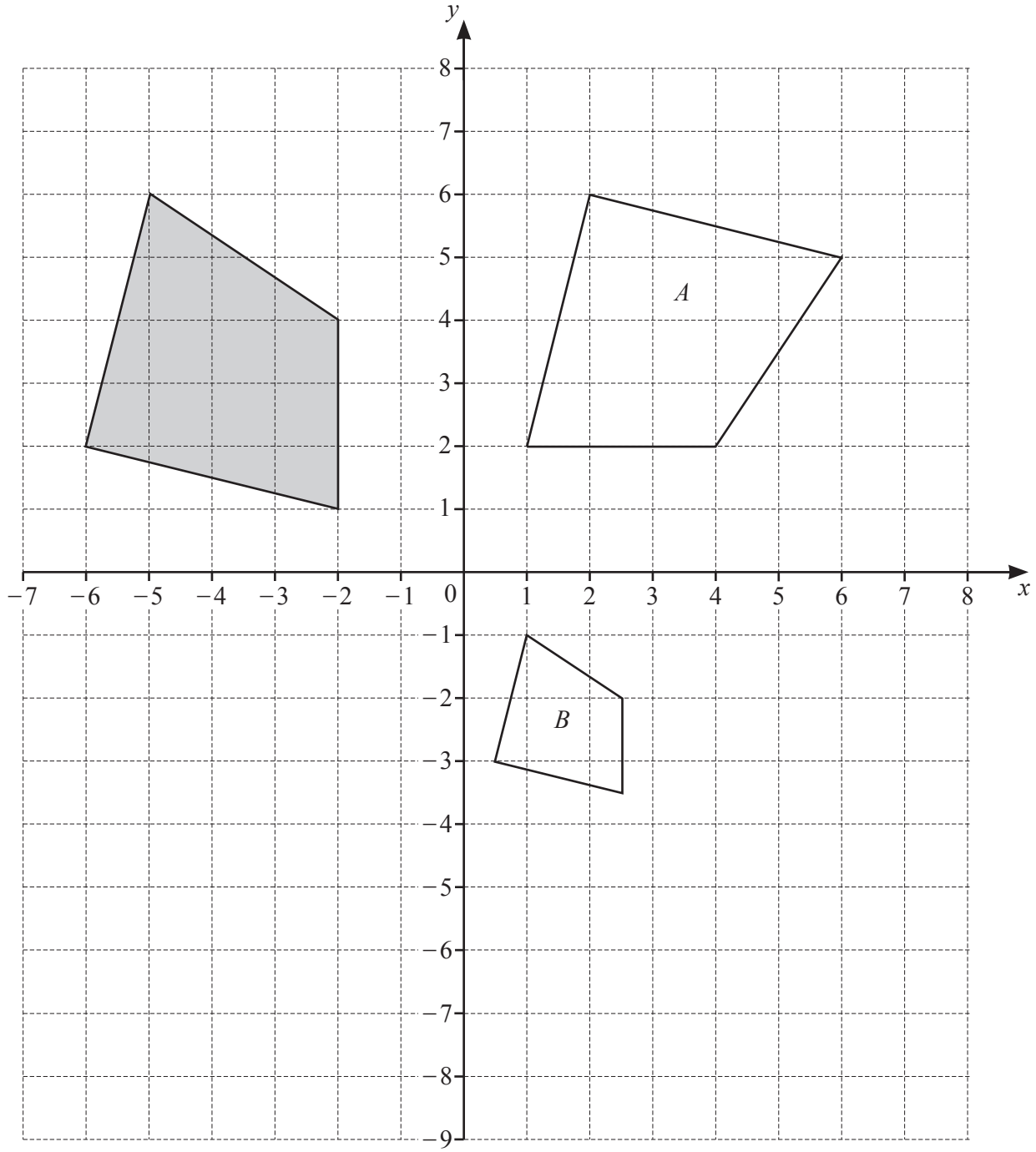

Describe fully the **single** transformation that maps

(i) the shaded shape onto shape A

.....

..... [3]

(ii) the shaded shape onto shape B.

View solution

.....

..... [3]

(c) On the grid, draw the image of

View solution

(i) the shaded shape after a translation by the vector $\begin{pmatrix} 9 \\ -6 \end{pmatrix}$ [2]

(ii) the shaded shape after a reflection in the line $y = -1$. [2]

View solution

3 These are the test scores of 16 students.

15	26	9	45	36	20	41	39
40	23	32	18	41	34	37	31

(a) Complete the stem-and-leaf diagram.

View solution

0	
1	
2	
3	
4	

Key: 1 | 5 represents 15

[2]

(b) Find the mode.

View solution

..... [1]

(c) Find the median.

View solution

..... [1]

(d) Find the range.

View solution

..... [1]

© UCLES 2023

(e) Complete the bar chart for the test scores of the 16 students.

View solution

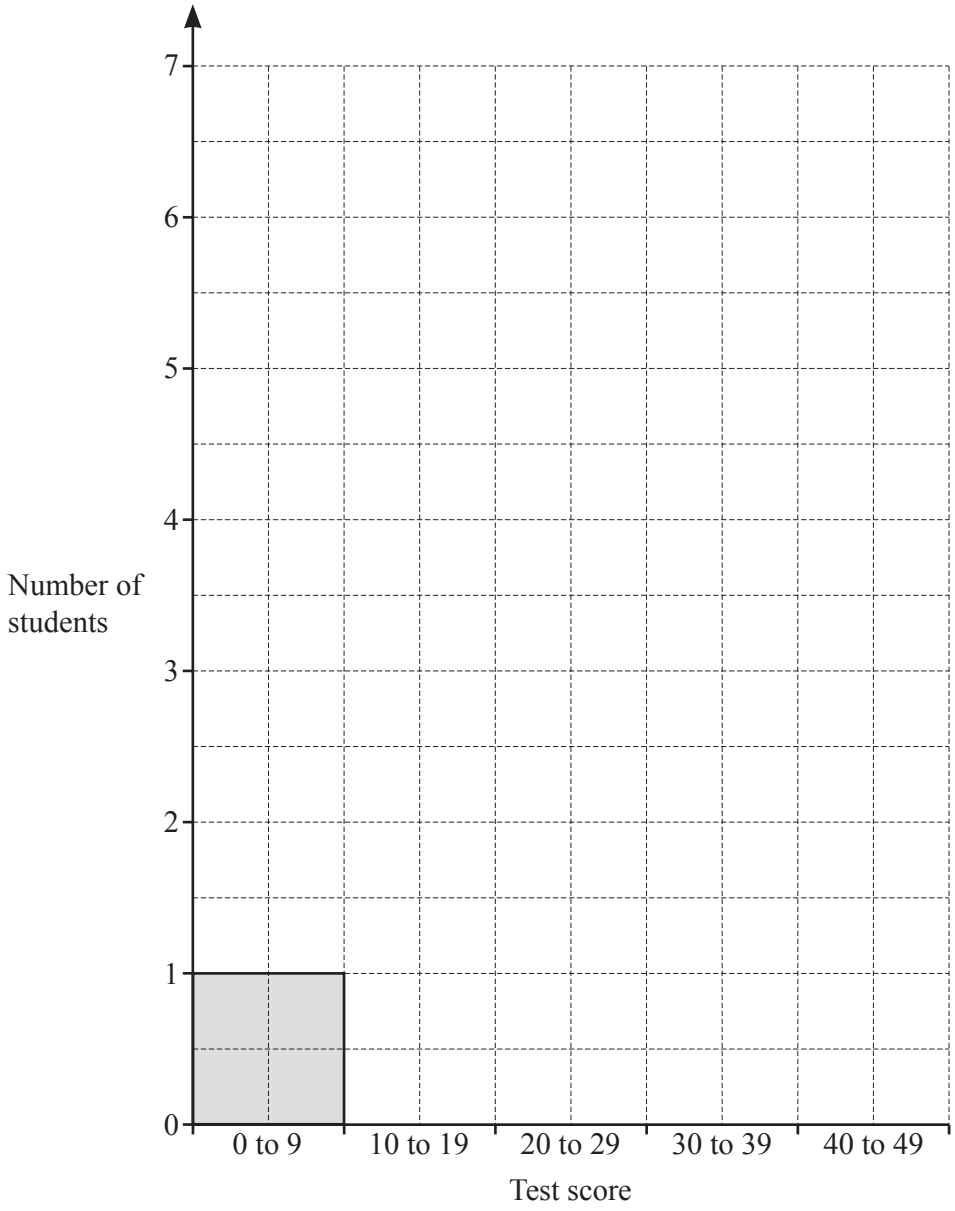

[2]

(f) Work out the percentage of students with a test score of 40 or more.

View solution

..... % [1]

4 **(a)** The diagram shows the net of a solid on a 1 cm^2 grid.

View solution

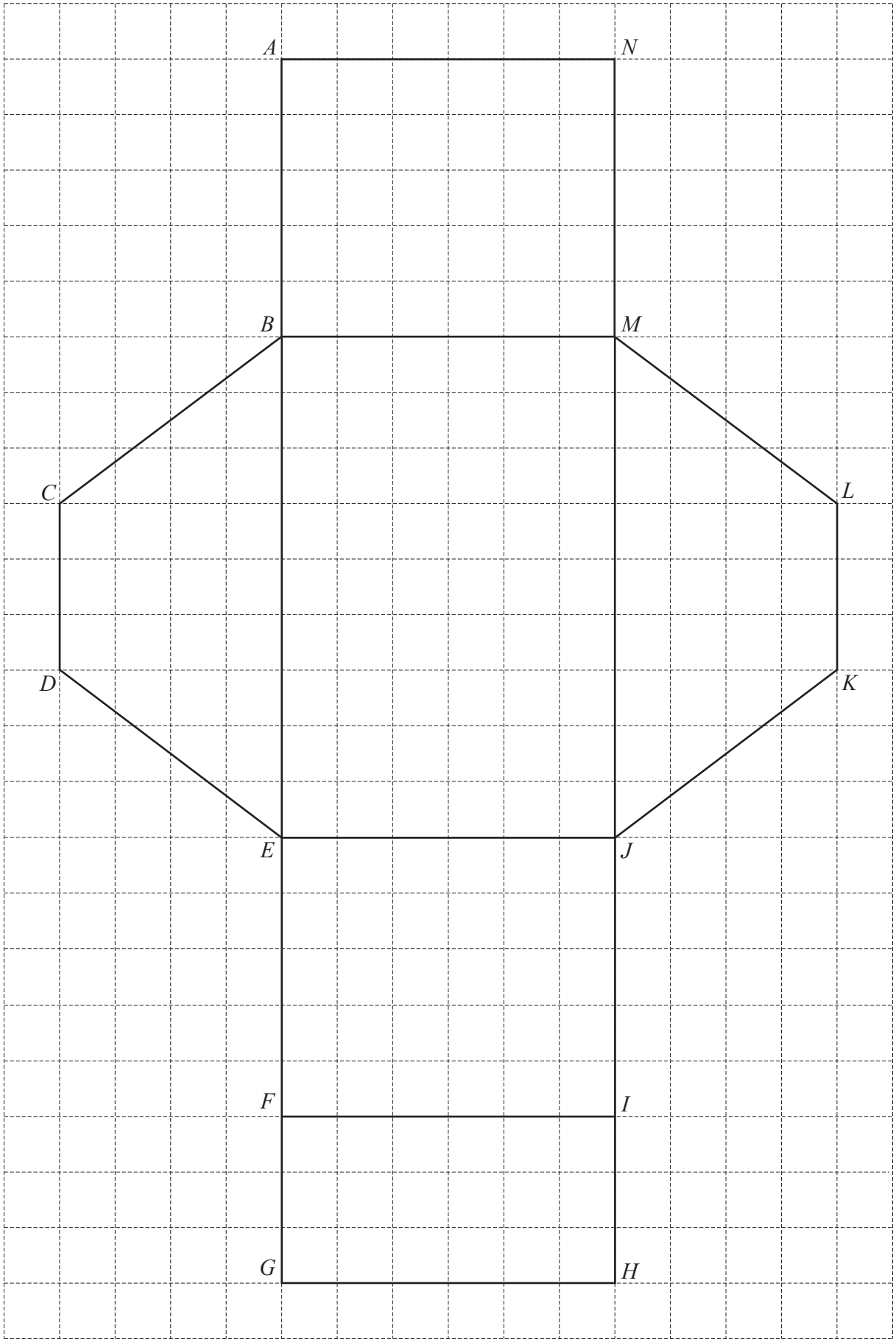

(i) When the net is folded to make the solid, point C will join with point A.

Write down which other point will join with point A.

..... [1]

(ii) Calculate the total surface area of the solid.

View solution

..... cm^2 [3]

(iii) Complete this statement.

View solution

The solid is a ..... with the cross-section in the shape of a ..... [2]

(iv) Draw a sketch of the solid.

View solution

[1]

(b)

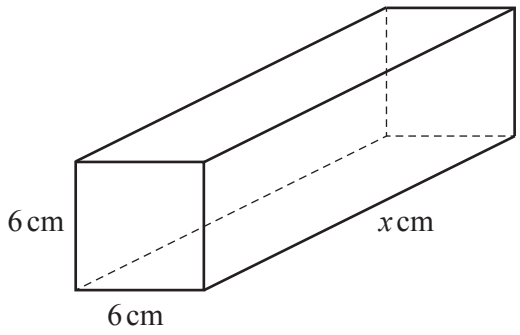

NOT TO SCALE

View solution

The diagram shows a cuboid.
The volume of the cuboid is 540 cm^3.

Calculate the value of x.

$x =$ ..... [2]

5 Antonio buys a restaurant for \$240 000.
This is $\frac{5}{8}$ of the amount he has available to spend.

(a) Show that he has \$144 000 left after buying the restaurant.

View solution

[2]

(b) Some of the \$144 000 is spent on expenses.
Expenses are wages, equipment and supplies in the ratio

View solution

wages : equipment : supplies = 9 : 5 : 8.

The amount spent on wages is \$45 000.

(i) Find the amount spent on

(a) equipment

\$ ..... [2]

(b) supplies.

\$ ..... [1]

(ii) Work out the amount Antonio has left now.

View solution

\$ ..... [2]

© UCLES 2023

(c) Antonio borrows \$25 400 for 6 years at a rate of 5% per year simple interest.

View solution

Calculate the total amount he repays at the end of the 6 years.

\$ ..... [3]

(d) In one week, the number of customers in the restaurant was 560.
In the next week, the number of customers in the restaurant was 656.

View solution

Calculate the percentage increase.

..... % [2]

6 **(a)** Complete the table of values for $y = 5 + 3x - x^2$.

x	-2	-1	0	1	2	3	4	5
y		1			7			–5

[3]

(b) On the grid, draw the graph of $y = 5 + 3x - x^2$ for $-2 \leqslant x \leqslant 5$.

View solution

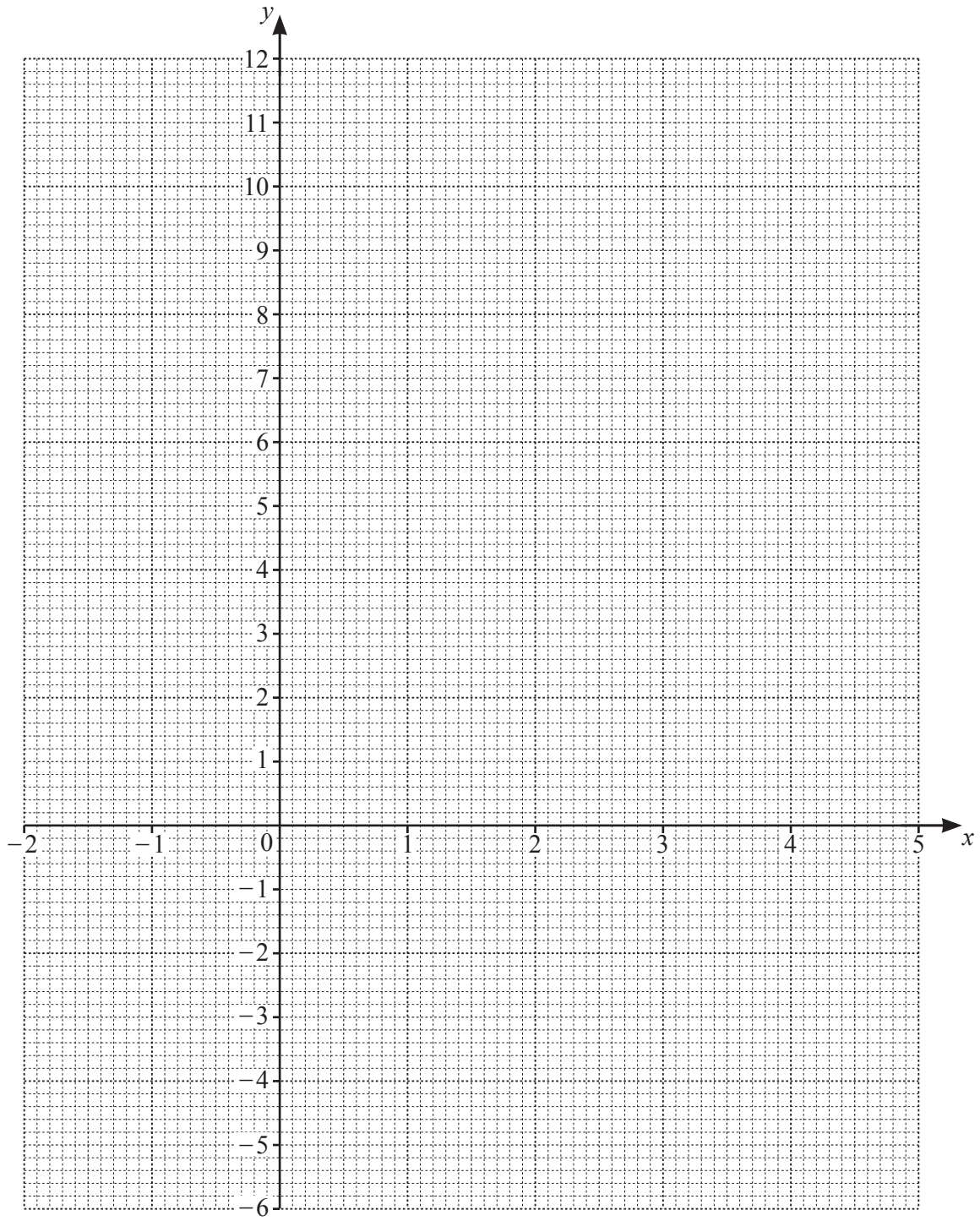

[4]

(c) Write down the equation of the line of symmetry of the graph.

View solution

..... [1]

(d) **(i)** Complete the table of values for $y = 2x + 1$.

View solution

x	-1	0	2
y			

[2]

(ii) On the grid, draw the graph of $y = 2x + 1$ for $-2 \leqslant x \leqslant 5$. [1]

(e) Write down the coordinates of the two points where the two graphs intersect.

View solution

(..... , ...) and (..... , ...) [3]

© UCLES 2023

7 (a)

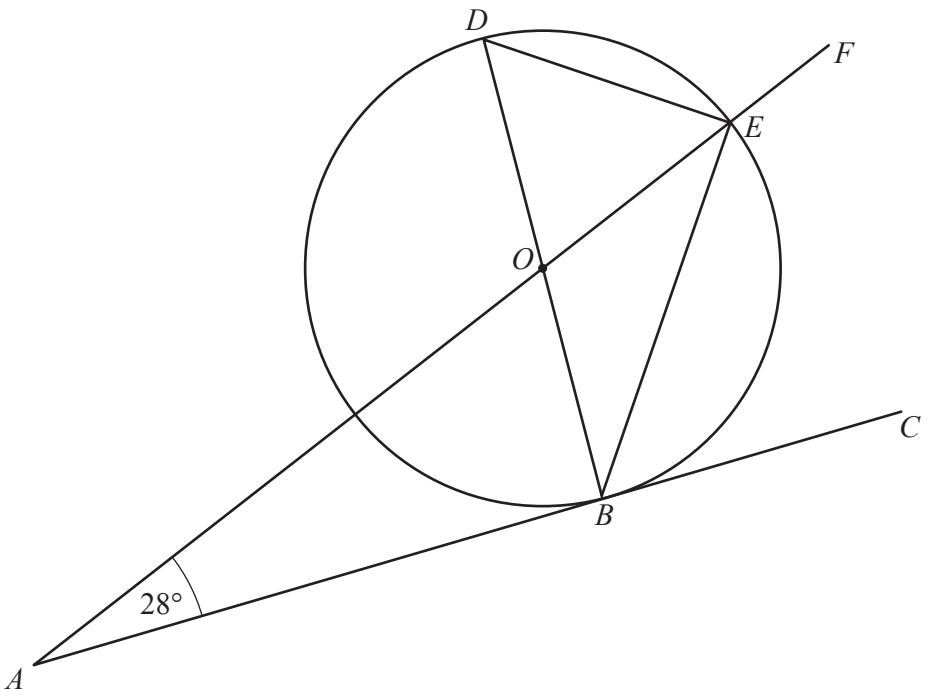

NOT TO SCALE

The diagram shows a circle, centre O, with points B, D and E on the circumference.
$AOEF$ is a straight line.
The straight line AC touches the circle at B.

(i) Write down the mathematical name for

(a) line BOD

..... [1]

(b) line ABC.

..... [1]

(ii) Write down the two geometrical reasons why angle AOB is 62°.

.....

and ..... [2]

(iii) Give the geometrical reason why angle DOE is also 62°.

..... [1]

(iv) **(a)** Find angle *DEB*.

View solution

Angle *DEB* = ... [1]

(b) Find angle *ODE*.

Angle *ODE* = ... [2]

(c) Find angle *BEF*.

Angle *BEF* = ... [2]

(b) Write down two geometrical properties that show that a polygon is regular.

View solution

..... and ..... [2]

(c) Work out the interior angle of a regular 10-sided polygon.

View solution

..... [2]

© UCLES 2023

8 Two friends, Diego and Javier, meet at a swimming pool.
The travel graph shows Diego's journey by bicycle from his home to the swimming pool.

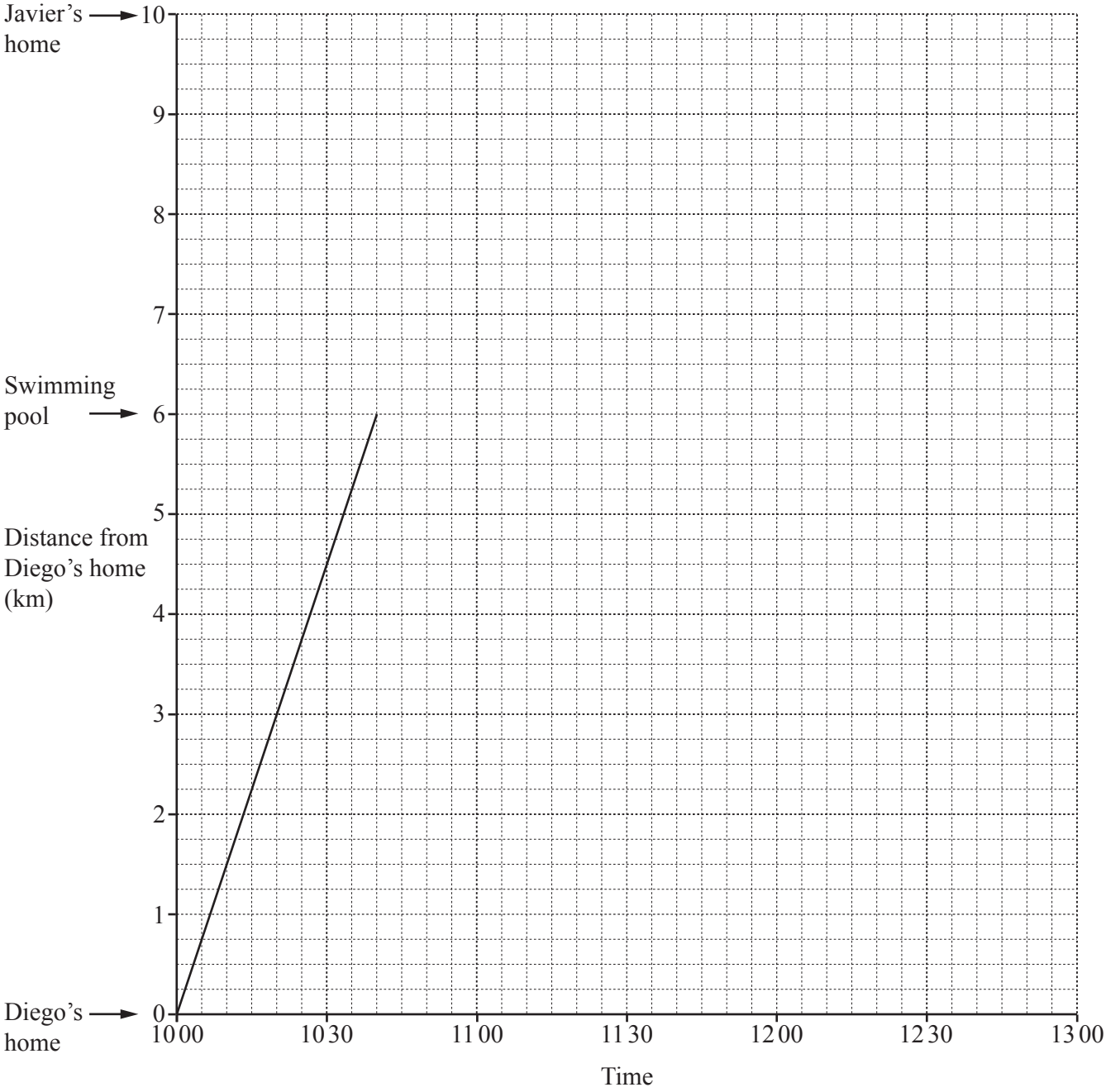

(a) Calculate Diego's speed for his journey from his home to the swimming pool.
Give your answer in kilometres per hour.

View solution

..... km/h [2]

(b) Diego stays at the swimming pool until 12 20.

(i) On the grid, draw the line representing the time he stays at the swimming pool. [1]

(ii) Work out how long, in hours and minutes, he is at the swimming pool.

View solution

..... h ..... min [1]

(c) Javier leaves his home 15 minutes later than Diego.
He walks to the swimming pool at a constant speed of 6 km/h.

View solution

On the grid, show Javier's journey from his home to the swimming pool.

[3]

(d) They both leave the swimming pool at 12 20 and return to their own homes, each at a constant speed.
Diego arrives home at 12 45.
Javier arrives home 5 minutes later than Diego.

View solution

Complete the travel graph. [2]

9 **(a)** Maria spins a fair 7-sided spinner numbered 1 to 7.

View solution

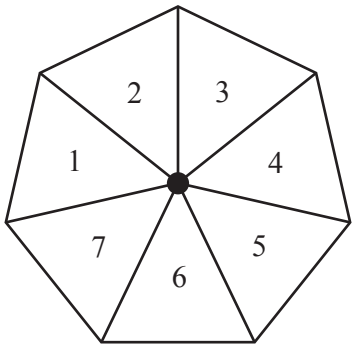

Explain why the probability that the spinner lands on a prime number is $\frac{4}{7}$.

[2]

(b) Maria spins the spinner a 2nd time.

View solution

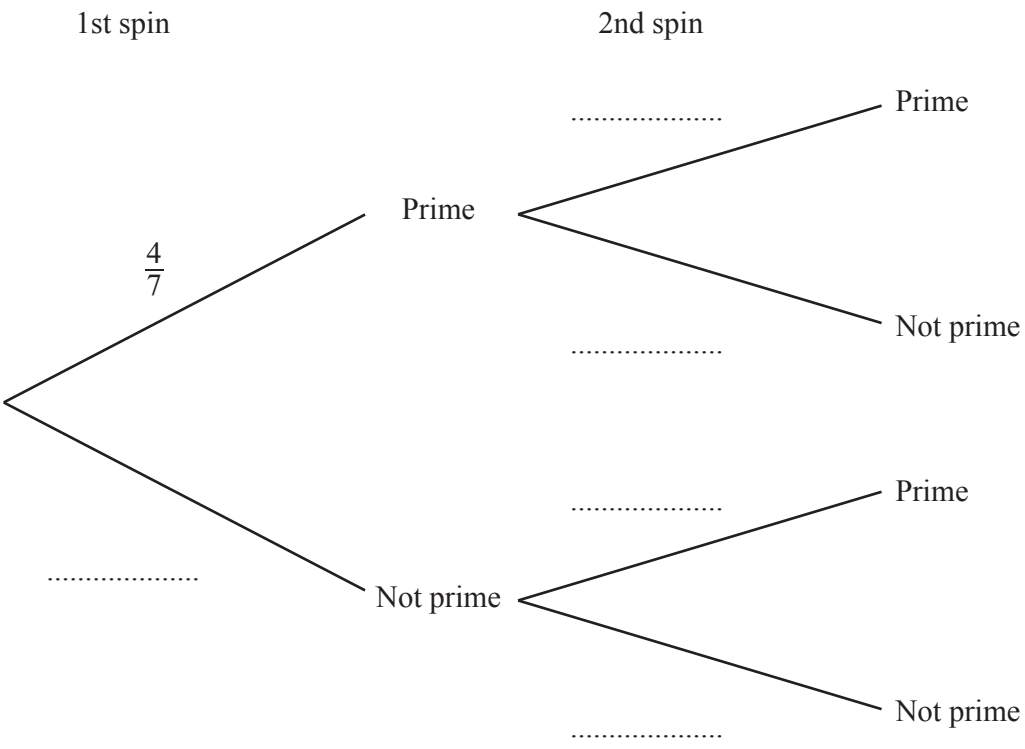

(i) Complete the tree diagram. [2]

(ii) Work out the probability that the spinner lands on a prime number both times.

View solution

..... [2]

10

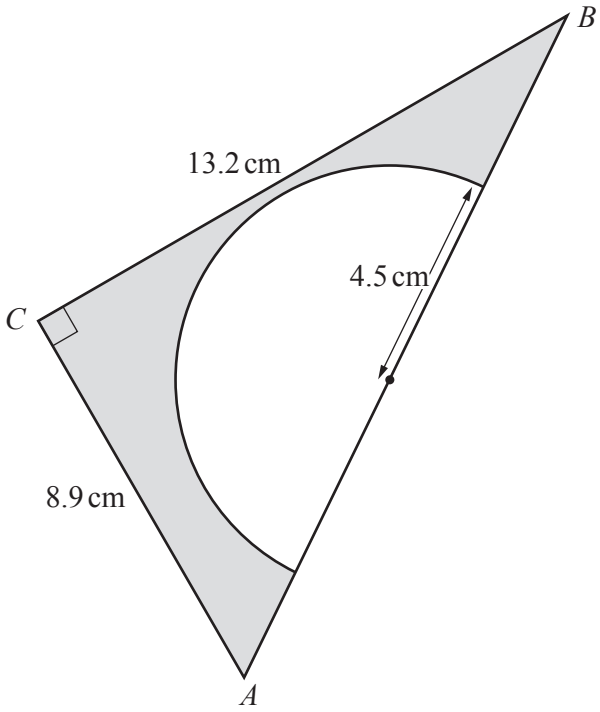

NOT TO SCALE

The diagram shows a right-angled triangle, ABC, and a semicircle.
The radius of the semicircle is 4.5 cm.
$AC = 8.9$ cm and $BC = 13.2$ cm.

(a) Calculate the shaded area.
Give the units of your answer.

View solution

.... [5]

(b) Calculate AB.

View solution

$AB =$ ..... cm [2]

© UCLES 2023

BLANK PAGE

Permission to reproduce items where third-party owned material protected by copyright is included has been sought and cleared where possible. Every reasonable effort has been made by the publisher (UCLES) to trace copyright holders, but if any items requiring clearance have unwittingly been included, the publisher will be pleased to make amends at the earliest possible opportunity.

To avoid the issue of disclosure of answer-related information to candidates, all copyright acknowledgements are reproduced online in the Cambridge Assessment International Education Copyright Acknowledgements Booklet. This is produced for each series of examinations and is freely available to download at www.cambridgeinternational.org after the live examination series.

Cambridge Assessment International Education is part of Cambridge Assessment. Cambridge Assessment is the brand name of the University of Cambridge Local Examinations Syndicate (UCLES), which is a department of the University of Cambridge.

© UCLES 2023