Cambridge Assessment International Education

Cambridge IGCSE™

CANDIDATE NAME									
CENTRE NUMBER						CANDIDATE NUMBER				

MATHEMATICS **0580/43**

Paper 4 (Extended) **May/June 2023**

2 hours 30 minutes

You must answer on the question paper.

You will need: Geometrical instruments

INSTRUCTIONS

- Answer **all** questions.
- Use a black or dark blue pen. You may use an HB pencil for any diagrams or graphs.
- Write your name, centre number and candidate number in the boxes at the top of the page.
- Write your answer to each question in the space provided.
- Do **not** use an erasable pen or correction fluid.
- Do **not** write on any bar codes.
- You should use a calculator where appropriate.
- You may use tracing paper.
- You must show all necessary working clearly.
- Give non-exact numerical answers correct to 3 significant figures, or 1 decimal place for angles in degrees, unless a different level of accuracy is specified in the question.
- For π, use either your calculator value or 3.142.

INFORMATION

- The total mark for this paper is 130.
- The number of marks for each question or part question is shown in brackets [ ].

This document has **20** pages.

© UCLES 2023

1 **(a)** Tomas sells a computer, a bike and a phone.
The amounts he receives are in the ratio computer : bike : phone = 14 : 17 : 9.

View solution

(i) Calculate the amount he receives for the phone as a percentage of the total.

..... % [2]

(ii) The total amount he receives is $560.

View solution

Calculate how much he receives for the bike.

$ ..... [2]

(iii) Tomas originally bought the bike for $195.
He wanted to make a profit of at least 25% when he sold it.

View solution

Does Tomas make a profit of at least 25%?
You must show all your working to support your decision.

[3]

(b) Ulla invests $725 for 6 years in an account paying simple interest at a rate of 1.3% per year.

View solution

Calculate the total interest earned at the end of 6 years.

$ ..... [2]

© UCLES 2023

(c) In a sale, all prices are reduced by 24%.
Victor pays $36.86 for a pair of shoes in the sale.

View solution

Calculate the original price of the shoes.

$ ..... [2]

2 **(a)** Anna records the number of text messages she receives for 14 days.

View solution

17	15	31	38	31	22	13
18	21	27	28	21	31	29

(i) Complete the stem-and-leaf diagram.

1	
2	
3	

Key: .....

[3]

(ii) Find the median.

View solution

..... [1]

(iii) Find the mode.

View solution

..... [1]

(iv) Find the range.

View solution

..... [1]

(b) In a shop, there are 4 red and 8 grey phones.
Anna and Pete each pick one of these phones at random.

View solution

Work out the probability that they both pick a grey phone.

..... [2]

3 **(a)** The scale drawing shows two sides, AB and BC, of a field.
The scale is 5 centimetres represents 200 metres.

View solution



Scale: 5 cm to 200 m

(i) Measure angle ABC.

Angle ABC = ... [1]

(ii) X is a point on BC.
$BX = 332$ m.

View solution

Mark the point X on the diagram. [2]

(iii) Find the scale in the form 1 : n.

View solution

1: ..... [2]

(b) A bronze statue is 4.5 m high and has a mass of 195 200 kg.
The density of bronze is 8000 kg / m^3.
The volume of a mathematically similar model of the statue is 0.385 m^3.

View solution

Calculate the height of the model.
[Density = Mass ÷ Volume]

..... m [5]

© UCLES 2023

4 (a)

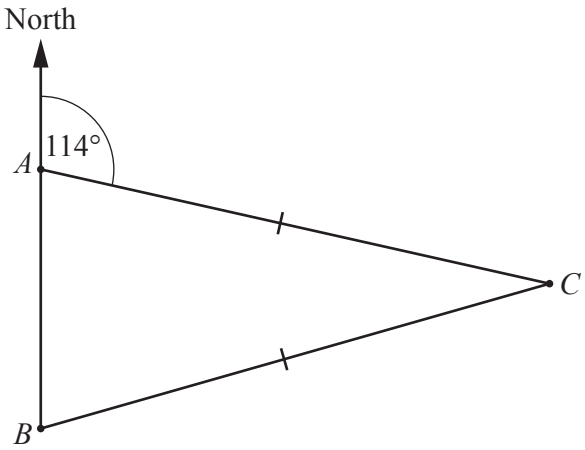

NOT TO SCALE

A, B and C are three towns and the bearing of C from A is 114°.
B is due south of A and $AC = BC$.

Calculate the bearing of B from C.

..... [3]

(b)

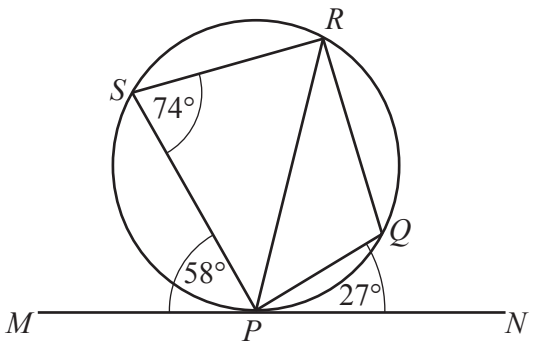

NOT TO SCALE

P, Q, R and S lie on a circle.
MPN is a tangent to the circle at P.
Angle $MPS = 58°$, angle $PSR = 74°$ and angle $QPN = 27°$.

(i) Find angle PRS.

Angle PRS = ... [1]

(ii) Find angle PQR.

Angle PQR = ... [1]

(iii) Find angle RPQ.

Angle RPQ = ... [2]

© UCLES 2023

(c)

View solution

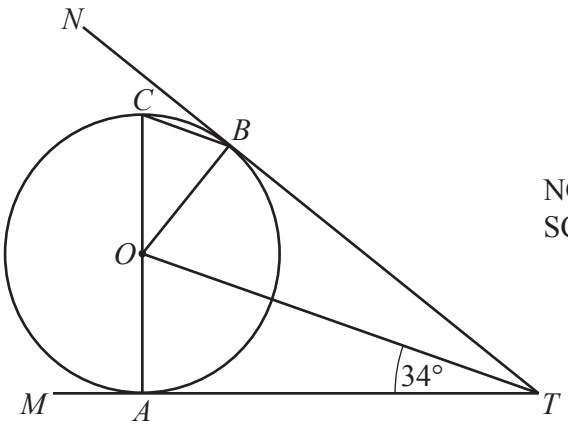

NOT TO SCALE

A, B and C lie on a circle, centre O, with diameter AC.
TAM and TBN are tangents to the circle and angle $ATO = 34°$.

Using values and geometrical reasons, complete these statements to show that CB is parallel to OT.

In triangles AOT and BOT, OT is common.
Angle OAT = angle $OBT = 90°$ because .....

.....

$AT = BT$ because .....

.....

Triangle AOT is congruent to triangle BOT because of congruence criterion .....

Angle AOT = angle $BOT = 56°$ because angles in a triangle add up to 180°.

Angle BOC = ... ° because .....

Angle OBC = ... ° because .....

.....

CB is parallel to OT because .....

[6]

© UCLES 2023

5 (a)

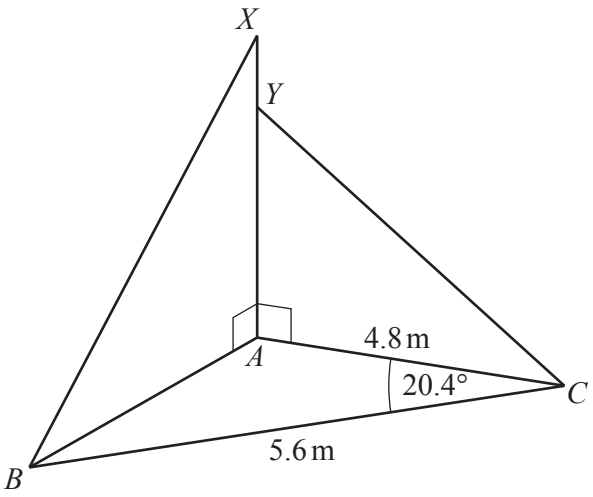

NOT TO SCALE

ABC is a scalene triangle on horizontal ground.
AYX is a straight vertical post, held in place by two straight wires *XB* and *YC*.
AC = 4.8 m, *BC* = 5.6 m and angle *ACB* = 20.4°.

(i) Calculate *AB*.

AB = ... m [3]

(ii) Angle *XBA* = 64°.

Calculate *AX*.

AX = ... m [2]

(iii) *AY* = 2.9 m.

Calculate the area of triangle *YAC*.

..... m^2 [2]

(b)

View solution

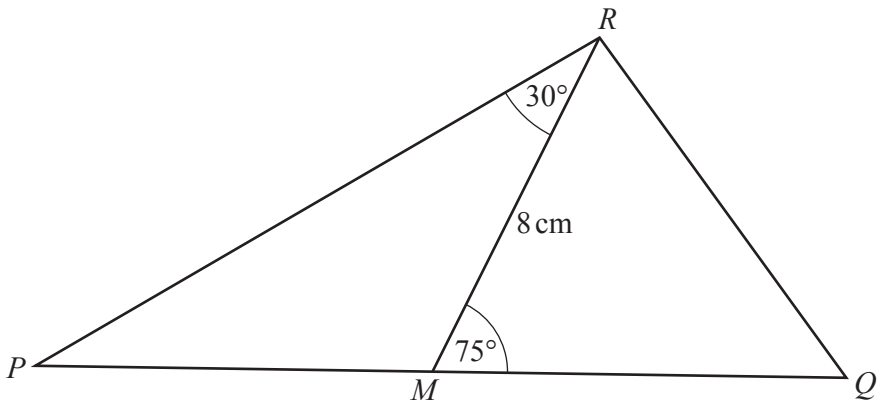

NOT TO SCALE

In triangle PQR, M is the midpoint of PQ.
$RM = 8$ cm, angle $PRM = 30°$ and angle $RMQ = 75°$.

Calculate PQ.

$PQ =$ ..... cm [5]

© UCLES 2023

6 **(a)** The cumulative frequency table shows information about the speed of each of 200 cars as they pass a speed camera.

View solution

Speed (v km/h)	$v \leqslant 70$	$v \leqslant 80$	$v \leqslant 90$	$v \leqslant 95$	$v \leqslant 100$	$v \leqslant 120$
Cumulative frequency	12	46	115	155	177	200

(i) On the grid, draw the cumulative frequency diagram.

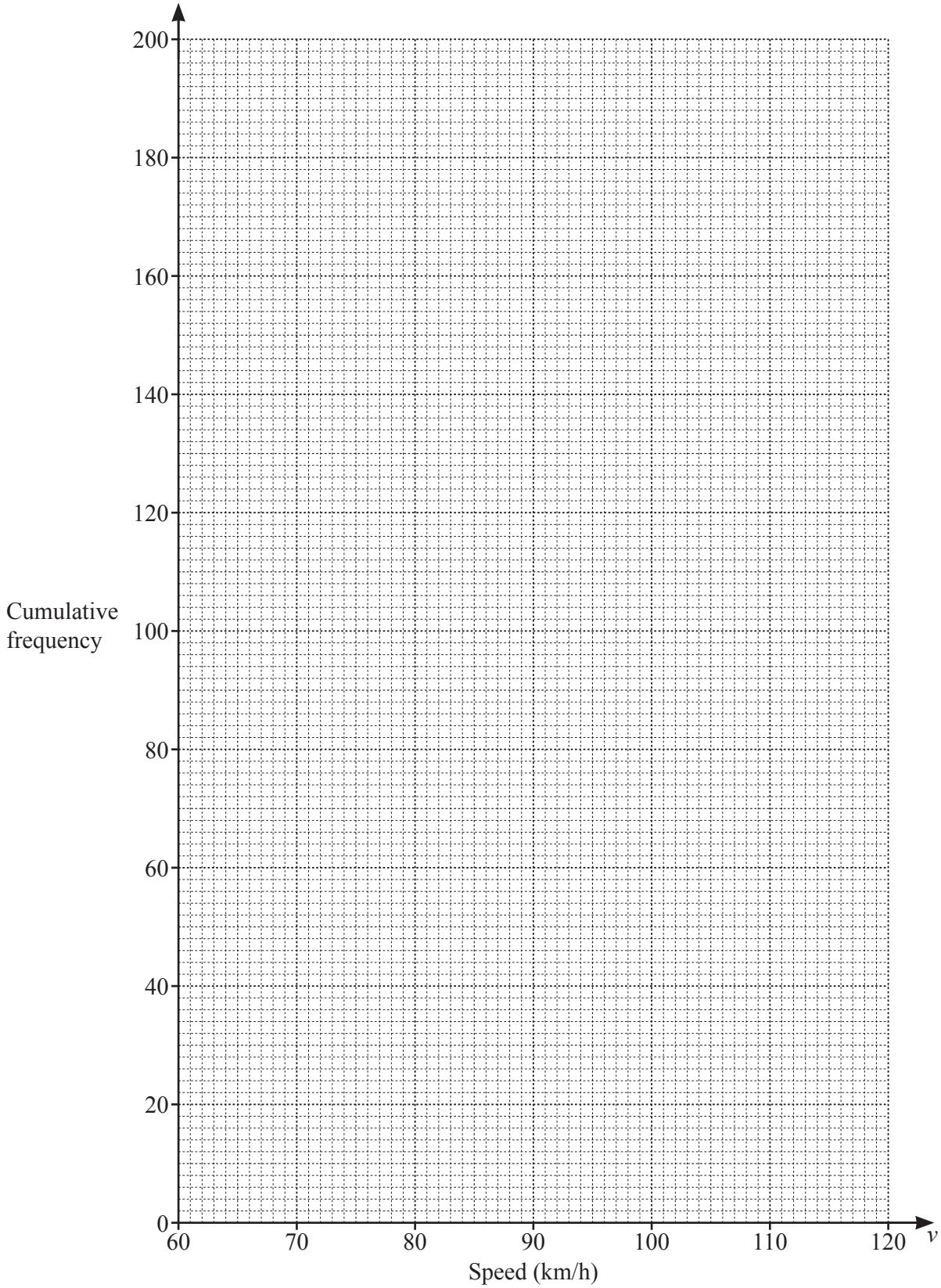

[3]

© UCLES 2023

(ii) Use your cumulative frequency diagram to find an estimate of

View solution

(a) the median

..... km/h [1]

(b) the interquartile range

..... km/h [2]

(c) the number of cars with a speed greater than 110 km/h.

..... [2]

(b) The frequency table shows information about the mass of each of 50 trucks.

View solution

Mass (m kg)	$2000 < m \leqslant 2600$	$2600 < m \leqslant 3500$	$3500 < m \leqslant 5000$	$5000 < m \leqslant 5700$
Frequency	12	15	16	7

(i) Calculate an estimate for the mean mass of the trucks.

..... kg [4]

(ii) In a histogram showing this information, the height of the first block is 6 cm.

View solution

Calculate the heights of the remaining three blocks.

Height of block for $2600 < m \leqslant 3500$ ..... cm

Height of block for $3500 < m \leqslant 5000$ ..... cm

Height of block for $5000 < m \leqslant 5700$ ..... cm [3]

© UCLES 2023

7 **(a)** The diagram shows the graph of a function.

View solution

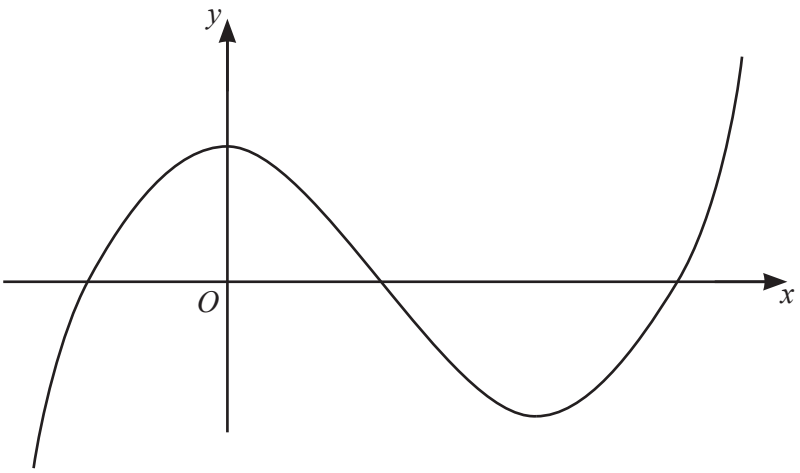

Put a ring around the word which correctly identifies the type of function.

reciprocal quadratic cubic exponential linear

[1]

(b) **(i)**

View solution

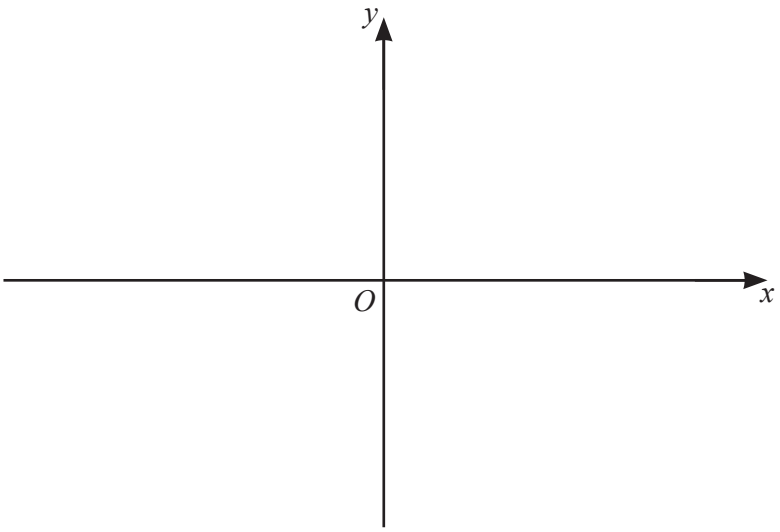

On the diagram, sketch the graph of $y = \frac{1}{2x}$, $x \neq 0$. [2]

(ii) Solve the equation $\frac{1}{2x} = 2x$.

View solution

$x =$ ..... and $x =$ ..... [2]

(c) (i)

View solution

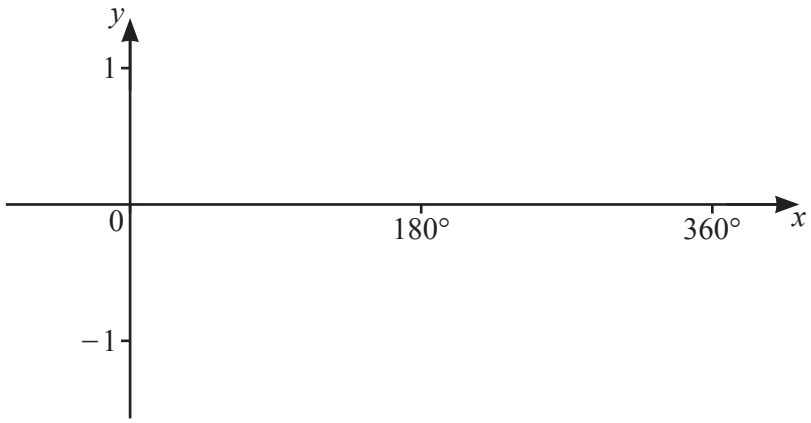

On the diagram, sketch the graph of $y = \sin x$ for $0° \leqslant x \leqslant 360°$. [2]

(ii) Solve the equation $3\sin x + 1 = 0$ for $0° \leqslant x \leqslant 360°$.

View solution

$x =$ ..... and $x =$ ..... [3]

8 **(a)** A shop sells shirts for $\$x$ and jackets for $\$(x + 27)$.
The shop sells 4 shirts and 3 jackets for a total of \$194.75 .

View solution

Write down and solve an equation to find the cost of one shirt.

\$ ..... [3]

(b) Solve the simultaneous equations.
You must show all your working.

View solution

$$x^2 + 4y = 37$$
$$5x + y = -8$$

$x =$ ..... , $y =$ .....

$x =$ ..... , $y =$ ..... [5]

(c) A solid cylinder has radius x and height $6x$.
A sphere of radius r has the same surface area as the total surface area of the cylinder.

View solution

Show that $r^2 = \frac{7}{2}x^2$.

[The surface area, A, of a sphere with radius r is $A = 4\pi r^2$.]

[4]

© UCLES 2023

9 (a)

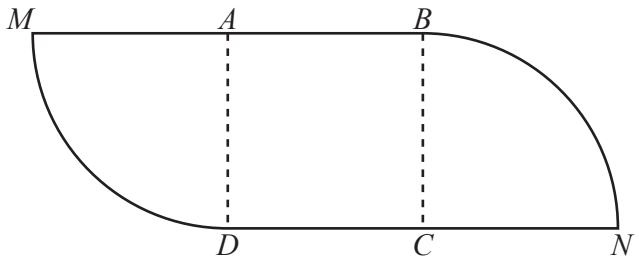

NOT TO SCALE

The diagram shows a shape made from a square *ABCD* and two equal sectors of a circle.
The square has side 11 cm.
MAB and *DCN* are straight lines.

(i) Calculate the area of the shape.

..... cm^2 [3]

(ii) Calculate the perimeter of the shape.

..... cm [3]

(b)

View solution

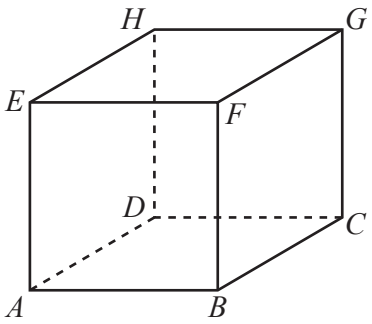

NOT TO SCALE

The diagram shows a cube $ABCDEFGH$ of edge 7 cm.

Calculate the angle between AG and the base of the cube.

..... [4]

10 The table shows some values for $y = 2^x - 3$.

x	-2	-1	0	0.5	1	1.5	2	2.5
y	-2.75			-1.58		-0.17	1	2.66

View solution

(a) Complete the table. [3]

View solution

(b) On the grid, draw the graph of $y = 2^x - 3$ for $-2 \leqslant x \leqslant 2.5$.

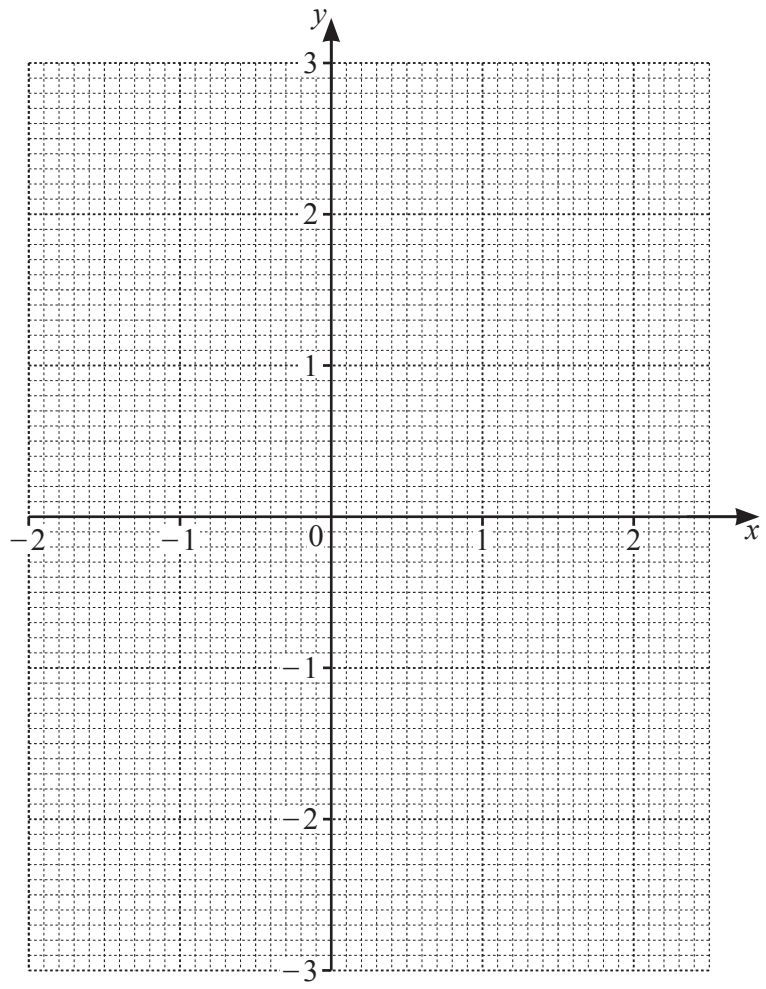

[4]

(c) Use your graph to solve the equation $2^x - 3 = 2$.

View solution

$x =$ ..... [1]

(d) By drawing a suitable straight line, solve the equation $2^x - x - 1.5 = 0$.

View solution

$x =$ ..... or $x =$ ..... [4]

11 M has coordinates (4, 1) and N has coordinates (−2, −7).

(a) Find the length of MN.

View solution

..... [3]

(b) Find the gradient of MN.

View solution

..... [2]

(c) Find the equation of the perpendicular bisector of MN.

View solution

..... [4]

Question 12 is printed on the next page.

12 The equation of a curve is $y = x^4 - 8x^2 + 5$.

(a) Find the derivative, $\left(\frac{dy}{dx}\right)$, of $y = x^4 - 8x^2 + 5$.

View solution

..... [2]

(b) Find the coordinates of the three turning points.
You must show all your working.

View solution

(..... , ...) and (..... , ...) and (..... , ...) [4]

(c) Determine which one of these turning points is a maximum.
Justify your answer.

View solution

[2]

Permission to reproduce items where third-party owned material protected by copyright is included has been sought and cleared where possible. Every reasonable effort has been made by the publisher (UCLES) to trace copyright holders, but if any items requiring clearance have unwittingly been included, the publisher will be pleased to make amends at the earliest possible opportunity.

To avoid the issue of disclosure of answer-related information to candidates, all copyright acknowledgements are reproduced online in the Cambridge Assessment International Education Copyright Acknowledgements Booklet. This is produced for each series of examinations and is freely available to download at www.cambridgeinternational.org after the live examination series.

Cambridge Assessment International Education is part of Cambridge Assessment. Cambridge Assessment is the brand name of the University of Cambridge Local Examinations Syndicate (UCLES), which is a department of the University of Cambridge.

© UCLES 2023