Cambridge Assessment International Education

Cambridge IGCSE™

CANDIDATE NAME									
CENTRE NUMBER						CANDIDATE NUMBER				

MATHEMATICS **0580/21**

Paper 2 (Extended) **May/June 2024**

1 hour 30 minutes

You must answer on the question paper.

You will need: Geometrical instruments

INSTRUCTIONS
- Answer **all** questions.
- Use a black or dark blue pen. You may use an HB pencil for any diagrams or graphs.
- Write your name, centre number and candidate number in the boxes at the top of the page.
- Write your answer to each question in the space provided.
- Do **not** use an erasable pen or correction fluid.
- Do **not** write on any bar codes.
- You should use a calculator where appropriate.
- You may use tracing paper.
- You must show all necessary working clearly.
- Give non-exact numerical answers correct to 3 significant figures, or 1 decimal place for angles in degrees, unless a different level of accuracy is specified in the question.
- For π, use either your calculator value or 3.142.

INFORMATION
- The total mark for this paper is 70.
- The number of marks for each question or part question is shown in brackets [ ].

This document has **16** pages. Any blank pages are indicated.

© UCLES 2024

1

View solution

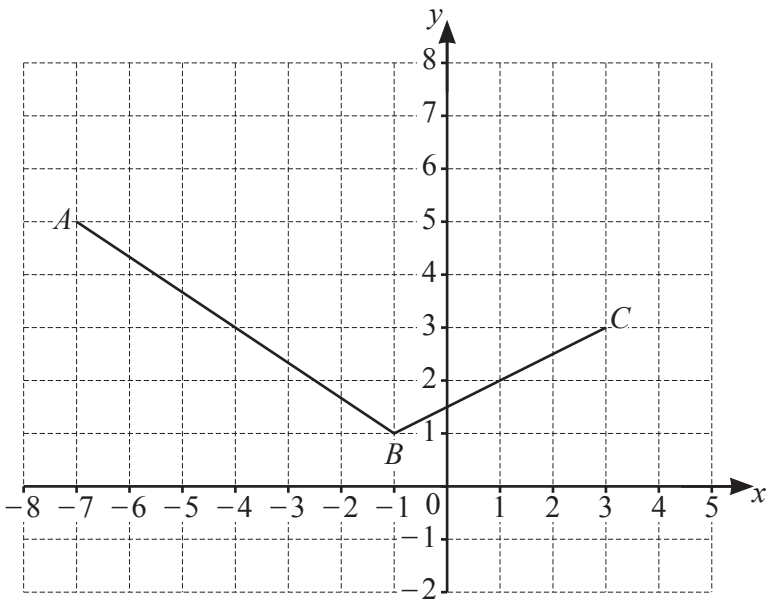

The diagram shows two sides of a parallelogram $ABCD$.

Find the coordinates of point D.

(..... , ...) [2]

2 Geetha has a box of toys.
She picks a toy at random from the box.
The probability that she picks a wooden toy is 0.6 .

(a) Work out the probability that she does not pick a wooden toy.

View solution

..... [1]

(b) The box contains three types of toys, wooden, plastic or metal.

View solution

Type of toy	Wooden	Plastic	Metal
Number of toys		14	14
Probability	0.6		

Complete the table.

[2]

© UCLES 2024

3 The table shows some information about two sequences.

	nth term	5th term
Sequence A	$60 - 4n$	
Sequence B	$n^2 - 300$	

(a) Complete the table.

View solution

[2]

(b) Find the smallest **positive** number in sequence B.

View solution

..... [2]

4 Find the greatest **odd** number that is a factor of 140 and a factor of 210.

View solution

..... [2]

5 Calculate.

(a) $\sqrt[3]{343} - \sqrt{40.96}$

View solution

..... [1]

(b) $(192 + 4 \times 16)^{1.25}$

View solution

..... [1]

© UCLES 2024

6

View solution

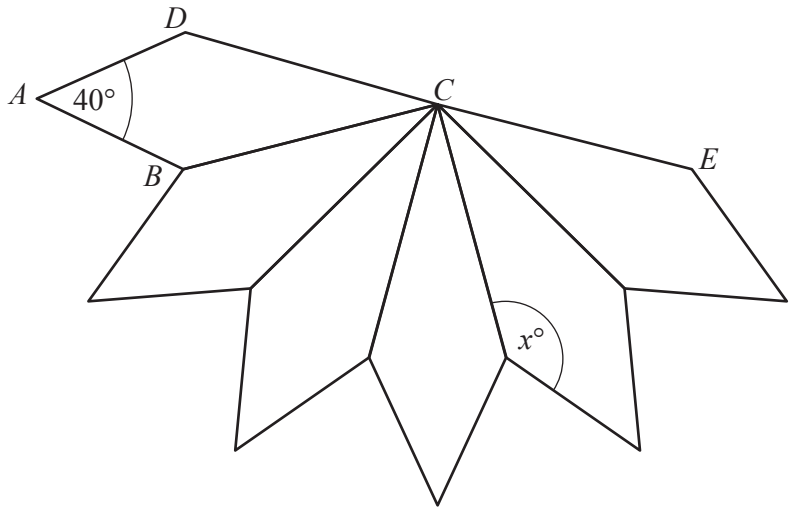

NOT TO SCALE

The diagram shows 5 kites that are congruent to kite $ABCD$.
Each kite is joined to the next kite along one edge.
Angle $DAB = 40°$ and DCE is a straight line.

Find the value of x.

$x =$ ..... [3]

© UCLES 2024

7

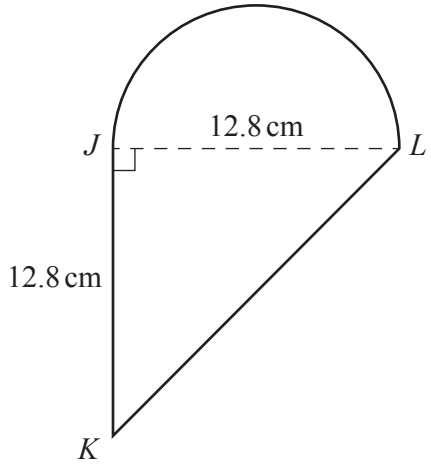

NOT TO SCALE

The diagram shows a shape made from a triangle JKL and a semicircle with diameter JL.
JKL is an isosceles right-angled triangle with $JK = JL = 12.8$ cm.

(a) Calculate the area of this shape.

View solution

..... cm^2 [3]

(b) Calculate the perimeter of this shape.

View solution

..... cm [4]

© UCLES 2024

8 These are the first five terms of a sequence.

View solution

11 18 25 32 39

Find an expression for the nth term of the sequence.

..... [2]

9 The value of a car is \$8000.
Each year the value of the car decreases exponentially by 25%.

View solution

Calculate the value of this car after 3 years.

\$ ..... [2]

10 Amir invests \$1500 in an account.
The account pays compound interest at a rate of r % per year.
At the end of 8 years the value of his investment is \$1656.73 .

View solution

Find the value of r.

$r =$ ..... [3]

© UCLES 2024

11

View solution

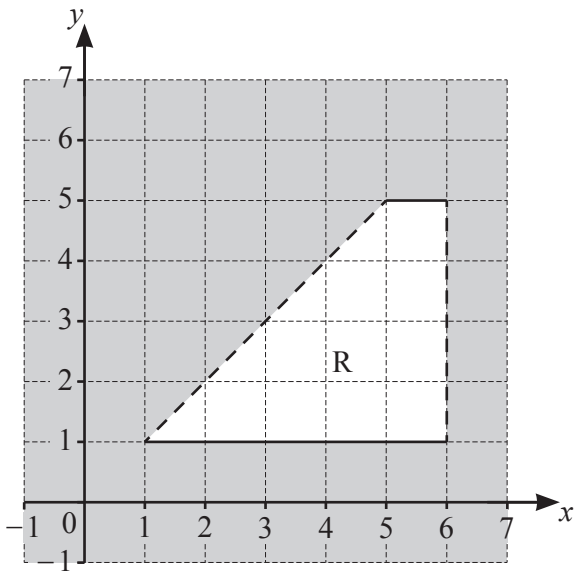

Find the inequalities that define the unshaded region, R.

..... [4]

12 Solve the simultaneous equations.
You must show all your working.

View solution

$$\frac{3x}{2} + 5y = 5$$
$$4x - 3y = 46$$

$x =$ .....

$y =$ ..... [4]

© UCLES 2024

13

View solution

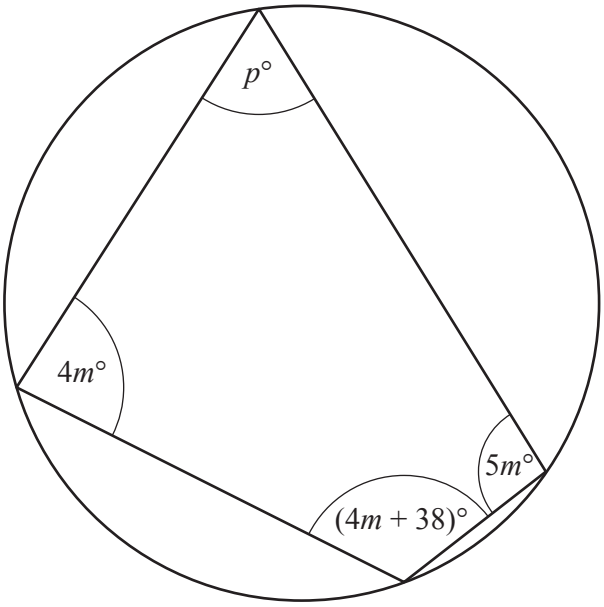

NOT TO SCALE

The diagram shows a cyclic quadrilateral.

Find the value of p.

$p =$ ..... [3]

14

View solution

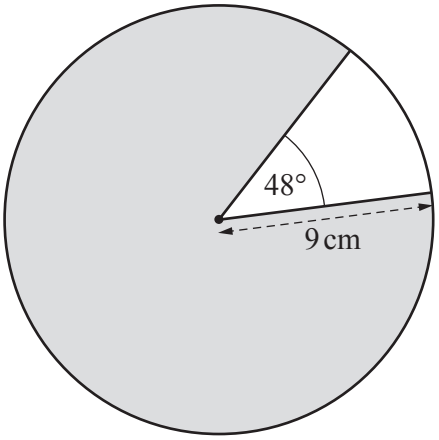

NOT TO SCALE

The diagram shows a circle with radius 9 cm.

Calculate the area of the shaded major sector.

..... cm^2 [3]

15 Write $0.1\dot{4}\dot{6}$ as a fraction in its simplest form.
You must show all your working.

View solution

..... [3]

16 **(a)** In the Venn diagram, shade the region $M' \cap N'$.

View solution

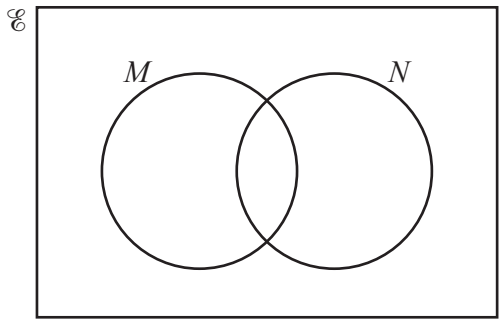

[1]

(b) Find $\mathrm{n}(B \cap (A' \cup C))$.

View solution

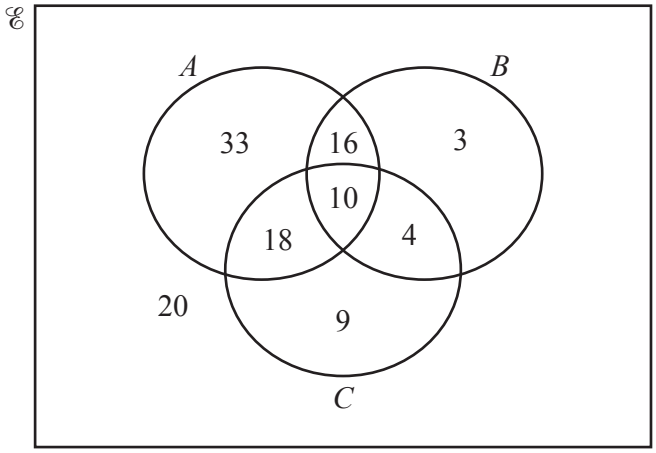

..... [1]

17

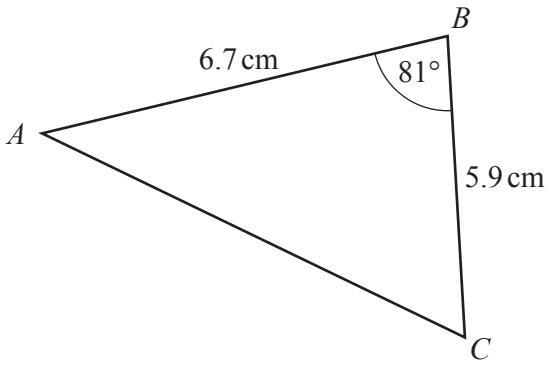

NOT TO SCALE

View solution

Calculate the area of triangle ABC.

..... cm^2 [2]

18

View solution

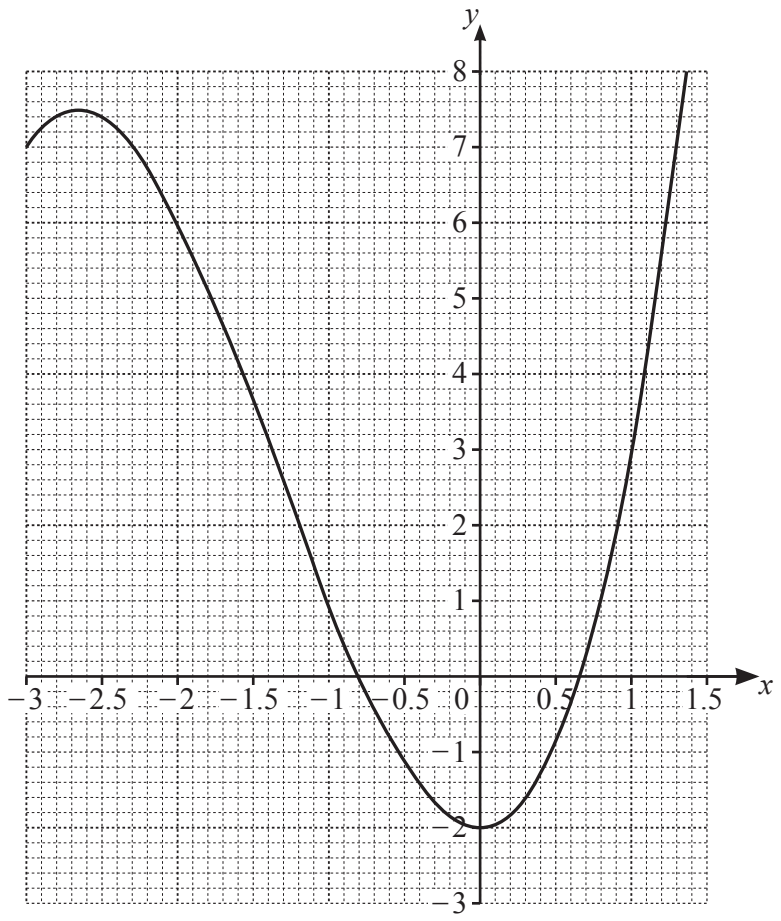

The diagram shows the graph of $y = x^3 + 4x^2 - 2$ for $-3 \leqslant x \leqslant 1.5$.

By drawing a suitable straight line, solve the equation $x^3 + 4x^2 - 2 = 2x$ for $-3 \leqslant x \leqslant 1.5$.

$x =$ ..... or $x =$ ..... [3]

© UCLES 2024

19 Factorise completely.

(a) $12m^2 - 75t^2$

View solution

..... [3]

(b) $xy + 15 + 3y + 5x$

View solution

..... [2]

20 Solve the equation $8\sin x + 6 = 1$ for $0° \leqslant x \leqslant 360°$.

View solution

$x =$ ..... or $x =$ ..... [3]

21

View solution

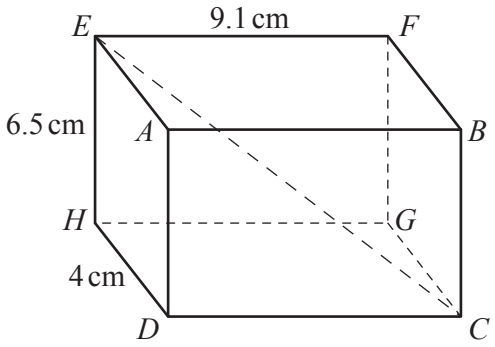

NOT TO SCALE

The diagram shows a cuboid.
$HD = 4$ cm, $EH = 6.5$ cm and $EF = 9.1$ cm.

Calculate the angle between CE and the base $CDHG$.

..... [4]

© UCLES 2024

22 Bag *A* and bag *B* each contain red counters and blue counters only.
Stephan picks a counter at random from bag *A* and Jen picks a counter at random from bag *B*.

View solution

The probability that Stephan picks a red counter is 0.4 .
The probability that Stephan and Jen both pick a red counter is 0.25 .

Find the probability that Stephan and Jen both pick a blue counter.

..... [4]

BLANK PAGE

Permission to reproduce items where third-party owned material protected by copyright is included has been sought and cleared where possible. Every reasonable effort has been made by the publisher (UCLES) to trace copyright holders, but if any items requiring clearance have unwittingly been included, the publisher will be pleased to make amends at the earliest possible opportunity.

To avoid the issue of disclosure of answer-related information to candidates, all copyright acknowledgements are reproduced online in the Cambridge Assessment International Education Copyright Acknowledgements Booklet. This is produced for each series of examinations and is freely available to download at www.cambridgeinternational.org after the live examination series.

Cambridge Assessment International Education is part of Cambridge Assessment. Cambridge Assessment is the brand name of the University of Cambridge Local Examinations Syndicate (UCLES), which is a department of the University of Cambridge.

© UCLES 2024