Cambridge Assessment International Education

# Cambridge IGCSE™

| | | | | | | | | | |
|---|---|---|---|---|---|---|---|---|---|
| CANDIDATE NAME | | | | | | | | | |
| CENTRE NUMBER | | | | | | CANDIDATE NUMBER | | | | |

**MATHEMATICS** **0580/41**

Paper 4 (Extended) **May/June 2024**

**2 hours 30 minutes**

You must answer on the question paper.

You will need: Geometrical instruments

**INSTRUCTIONS**
- Answer **all** questions.
- Use a black or dark blue pen. You may use an HB pencil for any diagrams or graphs.
- Write your name, centre number and candidate number in the boxes at the top of the page.
- Write your answer to each question in the space provided.
- Do **not** use an erasable pen or correction fluid.
- Do **not** write on any bar codes.
- You should use a calculator where appropriate.
- You may use tracing paper.
- You must show all necessary working clearly.
- Give non-exact numerical answers correct to 3 significant figures, or 1 decimal place for angles in degrees, unless a different level of accuracy is specified in the question.
- For $\pi$, use either your calculator value or 3.142.

**INFORMATION**
- The total mark for this paper is 130.
- The number of marks for each question or part question is shown in brackets [ ].

This document has **20** pages. Any blank pages are indicated.

© UCLES 2024

**1** **(a)** The table shows the areas, in $km^2$, of the four largest rainforests in the world.

View solution

| Rainforest | Area ($km^2$) |
|---|---|
| Amazon | 5 500 000 |
| Congo | 2 000 000 |
| Atlantic | 1 315 000 |
| Valdivian | 250 000 |

**(i)** Find the area of the Valdivian rainforest as a percentage of the area of the Amazon rainforest.

..... % [1]

**(ii)** Write, in its simplest form, the ratio of the areas of the rainforests Valdivian : Atlantic : Congo.

View solution

..... : ..... : ..... [2]

**(iii)** The Amazon rainforest has 60% of its area in Brazil and 10% of its area in Colombia. $43\frac{1}{3}$% of the **remaining area** of the rainforest is in Peru.

View solution

Find the percentage of the Amazon rainforest that is in Brazil, Colombia and Peru.

..... % [3]

© UCLES 2024

**(iv)** The area of the Amazon rainforest represents $\frac{27}{50}$ of the total area of rainforest in the world.

Calculate the total area of rainforest in the world.
Give your answer correct to the nearest 100 000 $km^2$.

View solution

..... $km^2$ [3]

**(v)** In the world, 60.7 hectares of rainforest are lost every minute.

View solution

Calculate the total area, in hectares, of rainforest that is lost in 365 days.
Give your answer in standard form.

..... hectares [3]

**(b)** The Amazon river has a length of 6440 km, correct to the nearest 10 km.
The Congo river has a length of 4400 km, correct to the nearest 100 km.

View solution

Calculate the upper bound of the difference between the lengths of the Amazon river and the Congo river.

..... km [3]

© UCLES 2024

**2 (a)**

View solution

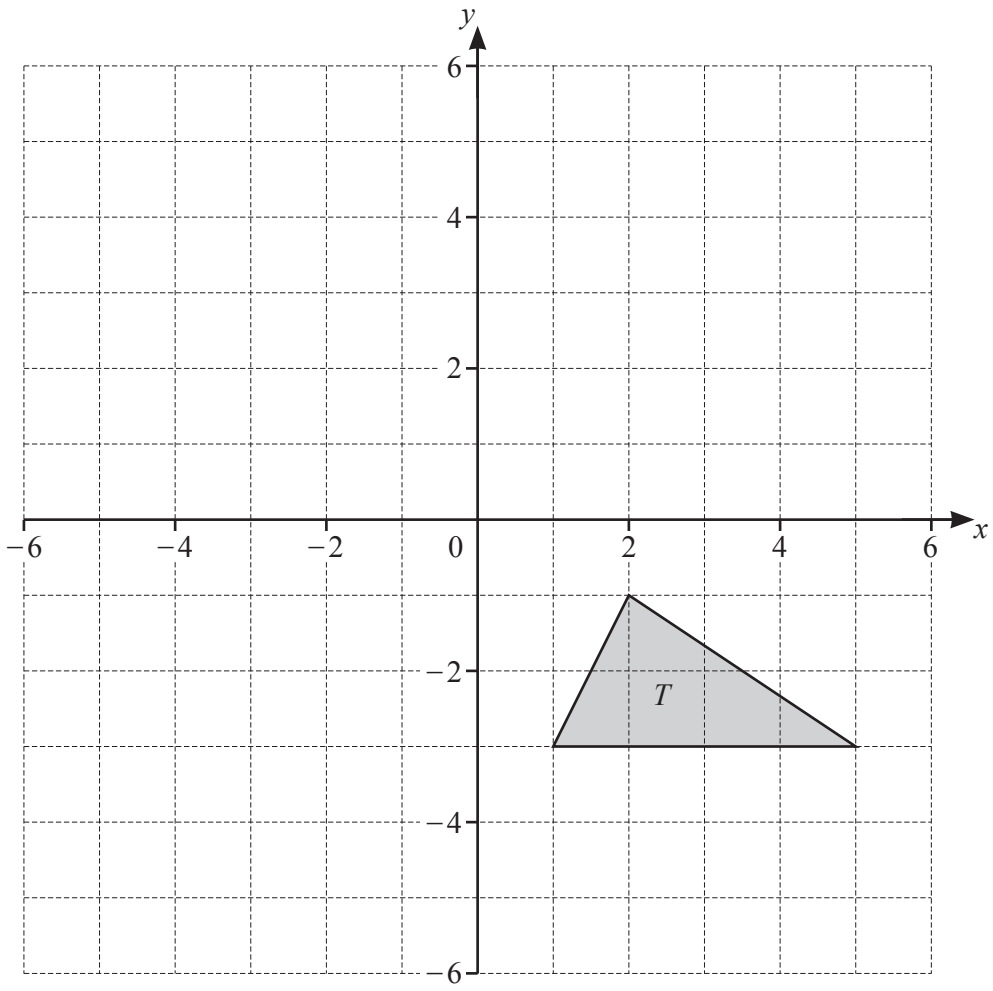


On the grid, draw the image of

**(i)** triangle $T$ after a reflection in the $x$-axis [1]

**(ii)** triangle $T$ after a translation by the vector $\begin{pmatrix}-5\\-2\end{pmatrix}$ [2]

**(iii)** triangle $T$ after an enlargement by scale factor $-\frac{1}{2}$ with centre $(-1, 1)$. [2]

© UCLES 2024

**(b)** A shape $P$ is enlarged by scale factor 3 to give shape $Q$.
Shape $Q$ is then enlarged by scale factor $\frac{2}{5}$ to give shape $R$.

View solution

The area of shape $P$ is $10\,\text{cm}^2$.

Calculate the area of shape $R$.

..... $\text{cm}^2$ [3]

**3** **(a)** $C = \frac{1}{4}xy^2$

View solution

**(i)** Find $C$ when $x = 5$ and $y = 8$.

$C =$ ..... [2]

**(ii)** Find the positive value of $y$ when $C = 15$ and $x = 2.4$ .

View solution

$y =$ ..... [2]

**(b)** Write as a single fraction in its simplest form.

View solution

$$\frac{4}{x-1} - \frac{3}{2x+5}$$

..... [3]

**(c)** Expand and simplify.

$$(2x+3)(4-x)^2$$

View solution

..... [3]

© UCLES 2024

**(d)** Simplify.

View solution

$$\left(\frac{y^8}{16x^{16}}\right)^{-\frac{3}{4}}$$

..... [3]

**4** **(a)** Jianyu records the time, in seconds, that some cars take to travel 195 m.
The box and whisker plot shows this information.

View solution

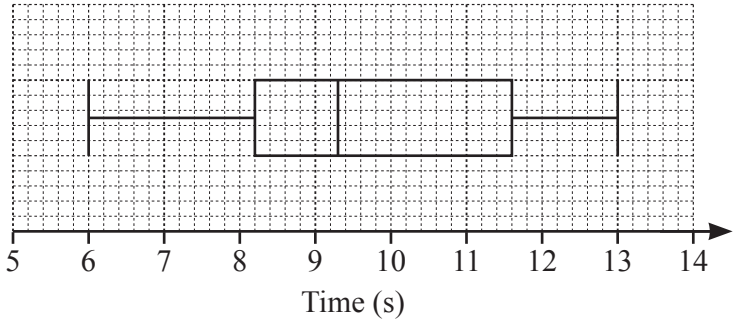


**(i)** Find the median time.

..... s [1]

**(ii)** Find the interquartile range.

View solution

..... s [1]

**(iii)** Find the difference between the average speed of the fastest car and the average speed of the slowest car.
Give your answer in **kilometres per hour**.

View solution

..... km/h [5]

**(b)** Matilda records the distances that 80 different cars can travel with a full tank of fuel. The table shows this information.

View solution

| Distance ($d$ km) | $250 < d \leqslant 300$ | $300 < d \leqslant 400$ | $400 < d \leqslant 420$ | $420 < d \leqslant 450$ | $450 < d \leqslant 500$ |
|---|---|---|---|---|---|
| Frequency | 7 | 13 | 19 | 21 | 20 |

**(i)** Write down the class interval that contains the median.

..... $< d \leqslant$ ..... [1]

**(ii)** Calculate an estimate of the mean.

View solution

..... km [4]

**(iii)** A histogram is drawn to show the information in the table.
The height of the bar for the interval $250 < d \leqslant 300$ is 2.8 cm.

View solution

Calculate the height of the bar for each of the following intervals.

$300 < d \leqslant 400$ ..... cm

$400 < d \leqslant 420$ ..... cm

$420 < d \leqslant 450$ ..... cm [3]

**(iv)** Two of the 80 cars are chosen at random.

Find the probability that, with a full tank of fuel, one of the cars can travel more than 450 km and the other car can travel **not** more than 300 km.

View solution

..... [3]

© UCLES 2024

**5** **(a)** $P$ is the point (1, 7).
$Q$ is the point (5, –5).

View solution

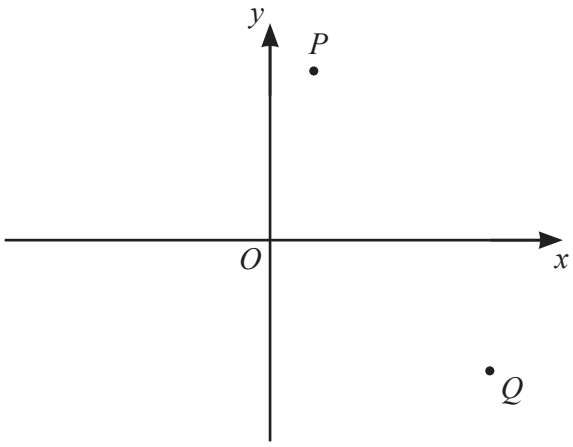


NOT TO SCALE

**(i)** Find $\overrightarrow{PQ}$ .

$\overrightarrow{PQ} = \begin{pmatrix} \quad \\ \quad \end{pmatrix}$ [2]

**(ii)** Show that $\left|\overrightarrow{OP}\right| = \left|\overrightarrow{OQ}\right|$ .

View solution

[3]

**(iii)** $PQ$ is a chord of a circle with centre $O$.

Calculate the circumference of this circle.

View solution

..... [2]

**(iv)** $PQ$ is the diameter of a different circle with centre $R$.

Find the coordinates of $R$.

View solution

( ..... , ..... ) [2]

© UCLES 2024

**(v)** Find the equation of the perpendicular bisector of $PQ$.
Give your answer in the form $y = mx + c$.

View solution

$y =$ ..... [4]

**(b)** The position vector of $A$ is **a**.
The position vector of $B$ is **b**.

View solution

$M$ is a point on $AB$ such that $AM : MB = 2 : 3$.

Find, in terms of **a** and **b**, the position vector of $M$.
Give your answer in its simplest form.

..... [4]

© UCLES 2024

**6**

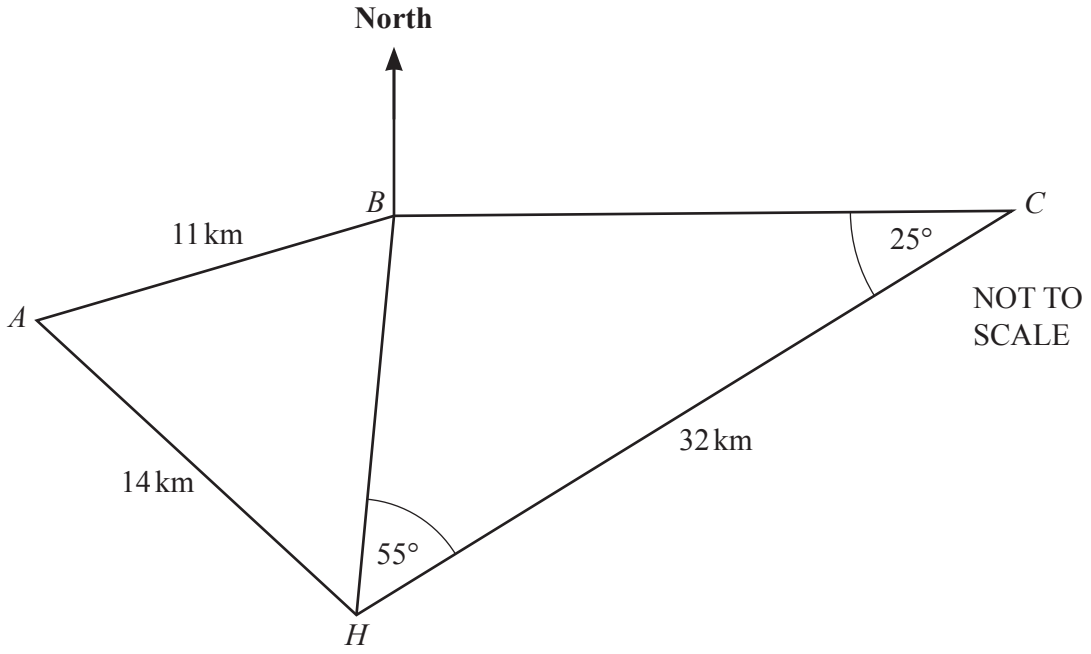


The diagram shows the positions of two lighthouses $A$ and $B$, a boat $C$ and a harbour $H$.
$C$ is due east of $B$.

**(a)** Find the bearing of the harbour from boat $C$.

View solution

..... [1]

**(b) (i)** Show that angle $CBH = 100°$.

View solution

[1]

**(ii)** Show that $BH = 13.7$ km, correct to 1 decimal place.

View solution

[3]

**(c)** Calculate the bearing of $A$ from $B$.

View solution

..... [5]

**(d)** At 1 pm boat $C$ sails 32 km directly to the harbour at a speed of 10 knots.

View solution

**(i)** Calculate the time when boat $C$ arrives at the harbour.
Give this time correct to the nearest minute.
[1 knot = 1.852 km/h]

..... [4]

**(ii)** Calculate the distance of boat $C$ to the harbour when boat $C$ is at the shortest distance from lighthouse $B$.

View solution

..... km [3]

© UCLES 2024

**7 (a)**

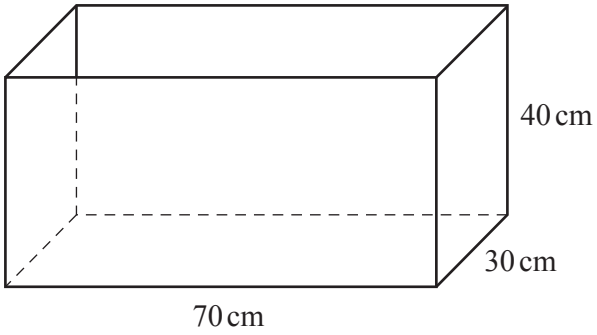


NOT TO SCALE

View solution

The diagram shows a box in the shape of a cuboid.
The box is open at the top.

**(i)** Work out the surface area of the inside of the open box.

..... $cm^2$ [3]

**(ii)** Cylinders with height 20 cm and diameter 15 cm are placed in the box.

View solution

Work out the maximum number of these cylinders that can completely fit inside the box.

..... [3]

© UCLES 2024

**(b)** A solid bronze cone has a mass 750 g.
The density of the bronze is 8.9 g/cm$^3$.

View solution

The ratio radius of cone : height of cone = 1 : 3.

**(i)** Show that the radius of the cone is 2.99 cm, correct to 3 significant figures.
[Density = mass ÷ volume]

[The volume, $V$, of a cone with radius $r$ and height $h$ is $V = \frac{1}{3}\pi r^2 h$.]

[4]

**(ii)** Calculate the total surface area of the cone.
[The curved surface area, $A$, of a cone with radius $r$ and slant height $l$ is $A = \pi r l$.]

View solution

..... cm$^2$ [5]

**8** **(a)** On the axes, sketch the graph of $y = x^2 + 7x - 18$.
On your sketch, write the values where the graph meets the $x$-axis and the $y$-axis.

View solution

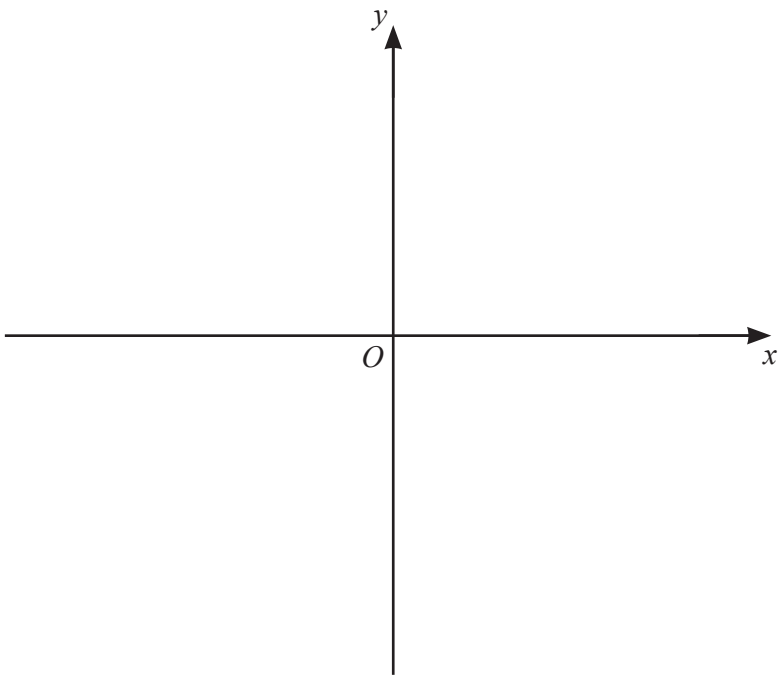


[4]

**(b)** **(i)** Find the derivative of $y = x^2 - 3x - 28$.

View solution

..... [2]

**(ii)** Find the coordinates of the turning point of $y = x^2 - 3x - 28$.

View solution

( ..... , ..... ) [3]

**(c)** The line $y = 5 - 2x$ intersects the graph of $y = x^2 - 3x - 28$ at point $P$ and point $Q$.

View solution

Find the coordinates of $P$ and $Q$.
You must show all your working and give your answers correct to 2 decimal places.

( ..... , ..... )

( ..... , ..... ) [6]

© UCLES 2024

**9** $f(x) = 4x + 1$ $g(x) = 6 - 2x$ $h(x) = 3^{x-2}$

View solution

**(a)** Find

**(i)** $f(3)$

..... [1]

**(ii)** $gf(3)$.

View solution

..... [1]

**(b)** Find $g^{-1}(x)$.

View solution

$g^{-1}(x) =$ ..... [2]

**(c)** Find $x$ when $f(x) = g(2x - 7)$.

View solution

$x =$ ..... [4]

© UCLES 2024

**(d)** Find the value of hh(2).

View solution

..... [2]

**(e)** Find $x$ when $h^{-1}(x) = 10$.

View solution

$x =$ ..... [2]

**BLANK PAGE**

Permission to reproduce items where third-party owned material protected by copyright is included has been sought and cleared where possible. Every reasonable effort has been made by the publisher (UCLES) to trace copyright holders, but if any items requiring clearance have unwittingly been included, the publisher will be pleased to make amends at the earliest possible opportunity.

To avoid the issue of disclosure of answer-related information to candidates, all copyright acknowledgements are reproduced online in the Cambridge Assessment International Education Copyright Acknowledgements Booklet. This is produced for each series of examinations and is freely available to download at www.cambridgeinternational.org after the live examination series.

Cambridge Assessment International Education is part of Cambridge Assessment. Cambridge Assessment is the brand name of the University of Cambridge Local Examinations Syndicate (UCLES), which is a department of the University of Cambridge.

© UCLES 2024