Cambridge Assessment International Education

Cambridge IGCSE™

CANDIDATE NAME									
CENTRE NUMBER						CANDIDATE NUMBER				

MATHEMATICS **0580/13**

Paper 1 Non-calculator (Core) **May/June 2025**

1 hour 30 minutes

You must answer on the question paper.

You will need: Geometrical instruments

INSTRUCTIONS
- Answer **all** questions.
- Use a black or dark blue pen. You may use an HB pencil for any diagrams or graphs.
- Write your name, centre number and candidate number in the boxes at the top of the page.
- Write your answer to each question in the space provided.
- Do **not** use an erasable pen or correction fluid.
- Do **not** write on any bar codes.
- Calculators must **not** be used in this paper.
- You may use tracing paper.
- You must show all necessary working clearly.

INFORMATION
- The total mark for this paper is 80.
- The number of marks for each question or part question is shown in brackets [ ].

This document has **20** pages. Any blank pages are indicated.

© UCLES 2025

List of formulas

Area, A, of triangle, base b, height h.	$A = \frac{1}{2}bh$
Area, A, of circle of radius r.	$A = \pi r^2$
Circumference, C, of circle of radius r.	$C = 2\pi r$
Curved surface area, A, of cylinder of radius r, height h.	$A = 2\pi rh$
Curved surface area, A, of cone of radius r, sloping edge l.	$A = \pi rl$
Surface area, A, of sphere of radius r.	$A = 4\pi r^2$
Volume, V, of prism, cross-sectional area A, length l.	$V = Al$
Volume, V, of pyramid, base area A, height h.	$V = \frac{1}{3}Ah$
Volume, V, of cylinder of radius r, height h.	$V = \pi r^2 h$
Volume, V, of cone of radius r, height h.	$V = \frac{1}{3}\pi r^2 h$
Volume, V, of sphere of radius r.	$V = \frac{4}{3}\pi r^3$

© UCLES 2025

Calculators must **not** be used in this paper.

1 **(a)** Write the number 70 000 000 in words.

View solution

..... [1]

(b) **(i)** Write down the value of the 5 in the number 0.25 .
Give your answer as a fraction.

View solution

..... [1]

(ii) Find the value of the reciprocal of 0.25 .

View solution

..... [2]

2 **(a)** Write down the mathematical name for an angle between 90° and 180°.

View solution

..... [1]

(b) Write down the mathematical term that describes two polygons that are the same shape and size.

View solution

..... [1]

© UCLES 2025

3 **(a)** Write down $\sqrt{169}$.

View solution

..... [1]

(b) Work out the value of 2^4.

View solution

..... [1]

(c) Work out the value of 10^{-2}.

View solution

..... [1]

(d) Work out $-18 \div -4$.

View solution

..... [1]

(e) Work out 1.6×0.02 .

View solution

..... [1]

© UCLES 2025

4 The diagram shows a quadrilateral with sides of equal length.

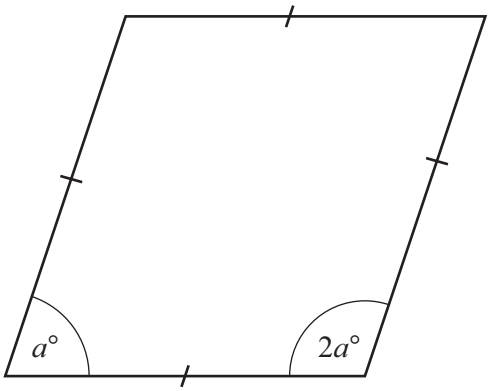

NOT TO SCALE

(a) Write down the mathematical name for this quadrilateral.

View solution

..... [1]

(b) Work out the value of a.

View solution

$a =$ ..... [2]

5 Find the next term in each sequence.

(a) 1, 5, 10, 16, 23, …

View solution

..... [1]

(b) 1, 2, 4, 8, 16, …

View solution

..... [1]

© UCLES 2025

6 These are the lengths of time, in minutes, of seven phone calls.

10 22 5 7 35 8 75

View solution

(a) (i) Find the median.

..... min [2]

(ii) Find the range.

View solution

..... min [1]

(b) The longest phone call is 75 minutes.

View solution

Write 75 minutes in hours.

..... h [1]

View solution

7 70 students study one of French, Spanish and German.

The ratio number who study French : number who study Spanish = 3 : 7.
15 students study French.

Find the number of students who study German.

..... [3]

© UCLES 2025

8 The diagram shows two faces of a net of a cuboid on a 1 cm^2 grid.

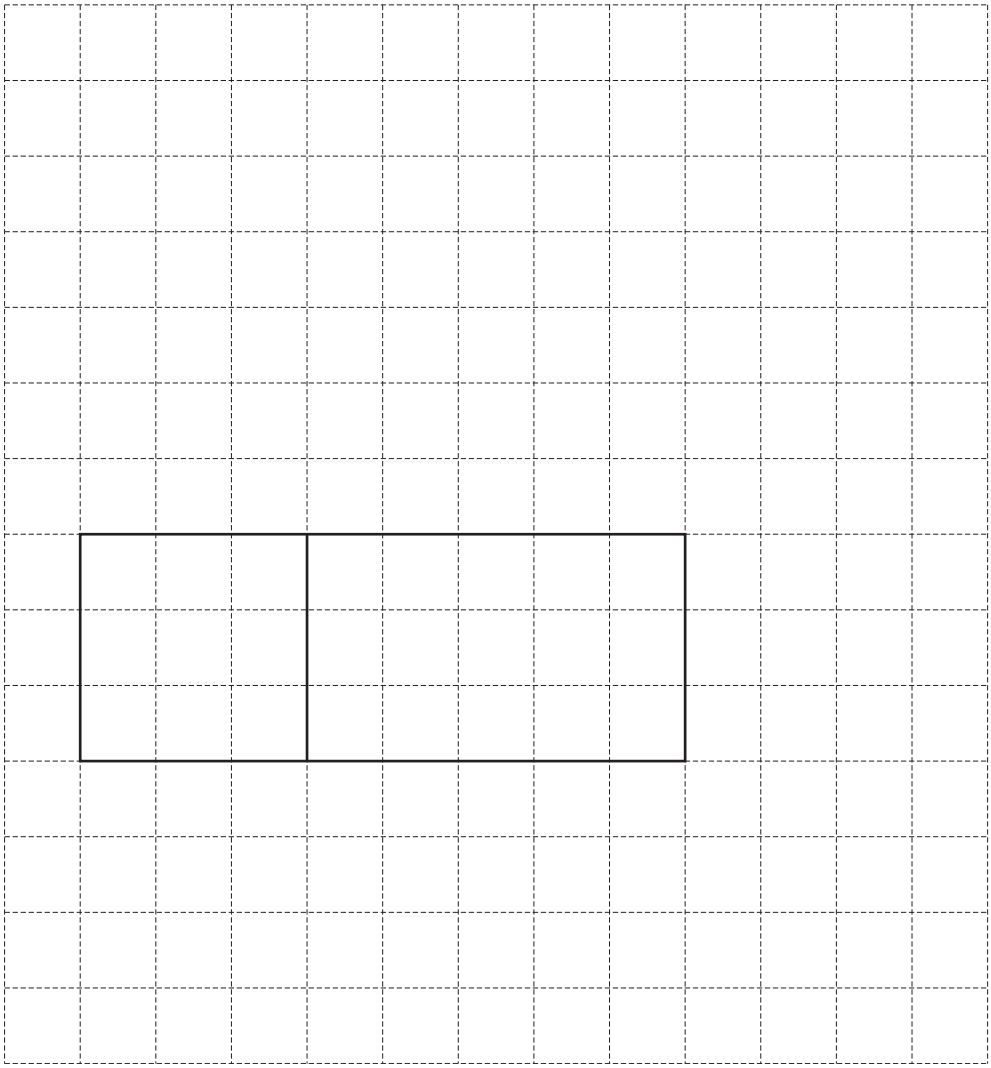

(a) Complete the statement.

View solution

The dimensions of the cuboid are ..... cm by ..... cm by ..... cm. [1]

(b) On the grid, complete a net of the cuboid. [3]

View solution

(c) Work out the volume of the cuboid.

View solution

..... cm^3 [2]

9 The diagram shows the net of a square-based pyramid.

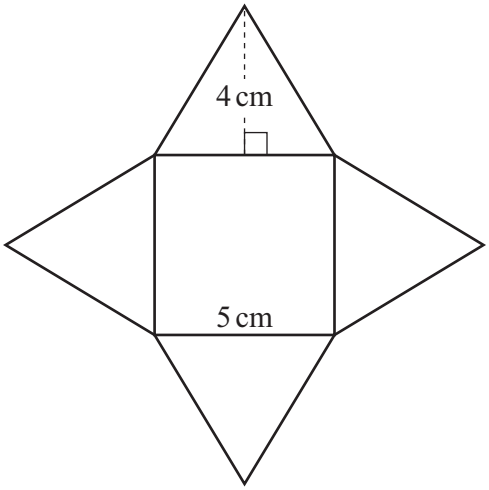

NOT TO SCALE

The perpendicular height of each triangle is 4 cm.
The base has side length 5 cm.

(a) Calculate the surface area of the pyramid.

View solution

..... cm^2 [2]

(b) Write down the number of edges of the square-based pyramid.

View solution

..... [1]

10 **(a)** Line A has equation $y = 3x + 1$.
Line B has equation $y = 3x - 1$.

View solution

Draw a ring around the description that is correct.

Line A intersects line B	Line A has a steeper gradient than line B	Line A is perpendicular to line B
Line A is parallel to line B	Line A and Line B intersect the y-axis at the same point	

[1]

(b)

View solution

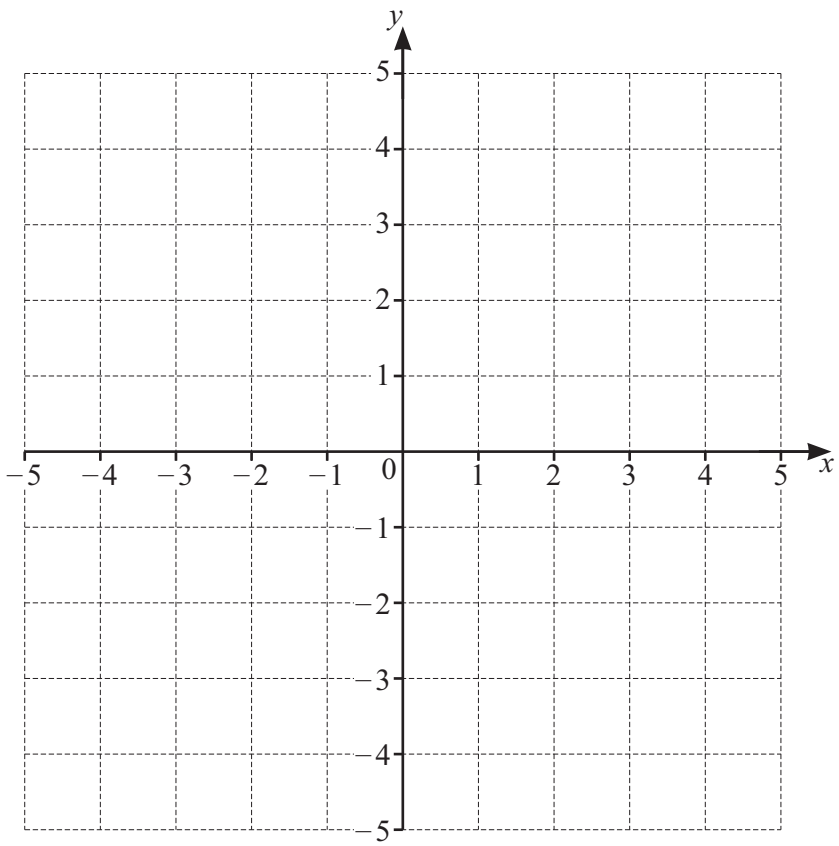

On the grid, draw the graph of $y = 2x - 1$.

[2]

11 Jo asks 90 people whether they prefer pop, rock, classical, jazz or folk music.
The pie chart shows some of the results.

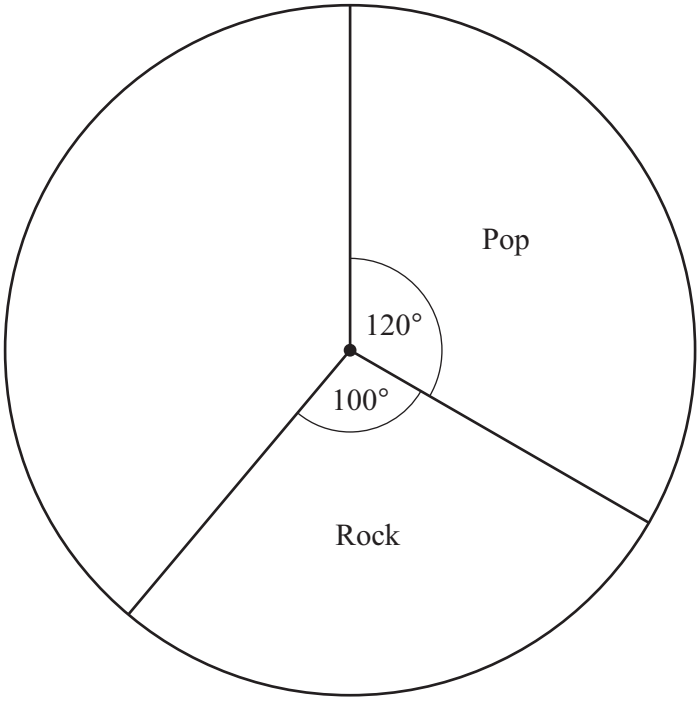

(a) Work out the number of people who prefer pop.

View solution

..... [2]

(b) The sector angle for classical is 80°.

View solution

Draw this sector on the pie chart. [1]

(c) 9 people prefer jazz and the rest prefer folk.

View solution

(i) Work out the size of the sector angle for jazz.

..... [2]

(ii) Complete the pie chart. [1]

View solution

12 A music group has 30 members.

7 members play a flute (F) and play a clarinet (C).
12 members play a flute.
1 member does not play a flute and does not play a clarinet.

View solution

(a) Use this information to complete the Venn diagram.

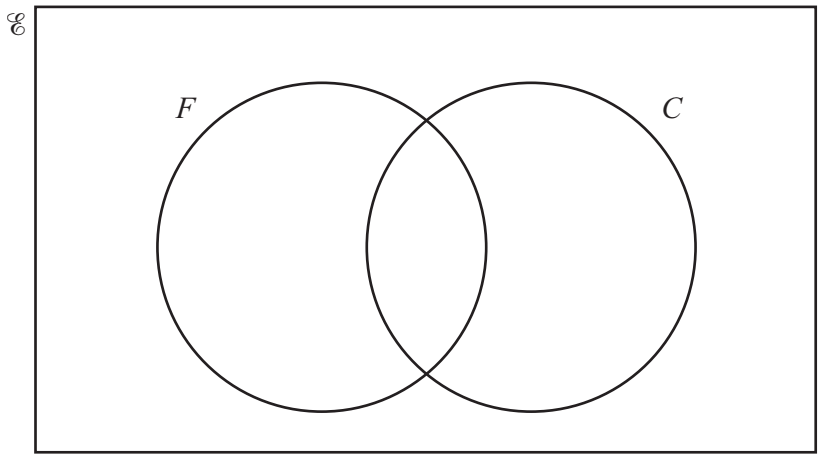

[2]

View solution

(b) Find n(C).

..... [1]

13 By writing each number in the calculation correct to 1 significant figure, find an estimate for the value of

$$\frac{62.5}{9.7 \times 0.52}.$$

View solution

..... [2]

14

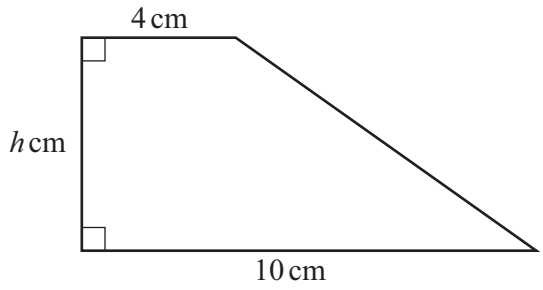

NOT TO SCALE

View solution

The diagram shows a trapezium.
The area of the trapezium is $42\,\text{cm}^2$.

Work out the value of h.

$h =$ ..... [2]

15 **(a)** Write down the inequality represented on the number line.

View solution

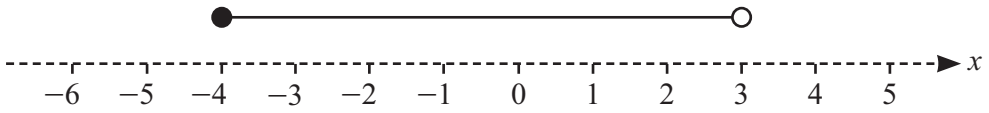

..... [2]

(b) Write down the smallest integer that satisfies the inequality $d > -3\frac{1}{4}$.

View solution

..... [1]

16 On Monday the cost of a concert ticket is $\$x$.
On Tuesday the cost of a ticket for the same concert is 20% more than the cost on Monday.

View solution

Jack buys 4 tickets on Monday and 5 tickets on Tuesday.
Jack pays $270 in total.

Work out the value of x.

$x =$ ..... [3]

17 Simplify.

(a) $y^4 \times y^6$

View solution

..... [1]

(b) $\dfrac{p^5}{p^8}$

View solution

..... [1]

(c) $\left(w^4\right)^3$

View solution

..... [1]

18

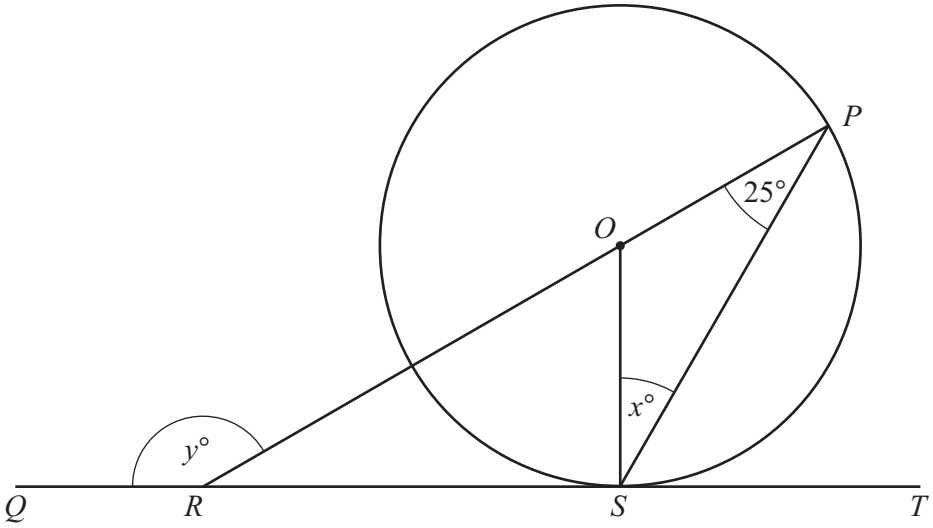

NOT TO SCALE

The diagram shows a circle, centre O.
P and S are points on the circle.
POR is a straight line.
$QRST$ is a tangent to the circle at S.

(a) Find the value of x.
Give a geometrical reason for your answer.

View solution

$x =$ ..... because ..... [2]

(b) Find the value of y.

View solution

$y =$ ..... [3]

© UCLES 2025

19

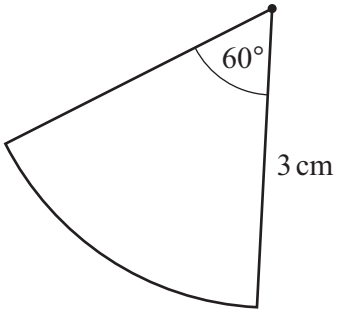

NOT TO SCALE

View solution

The diagram shows a sector of a circle with radius 3 cm and sector angle 60°.

Calculate the area of the sector.
Give your answer in terms of π in its simplest form.

..... cm^2 [2]

20 Find the highest common factor (HCF) of 36 and 54.

View solution

..... [2]

21 In this question, all lengths are in centimetres.

View solution

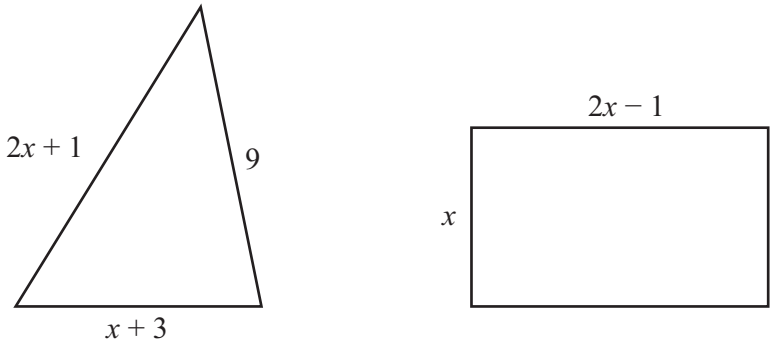

NOT TO SCALE

The perimeter of the triangle is equal to the perimeter of the rectangle.

Form an equation and solve it to find the value of x.

$x =$ ..... [4]

22 $g = \frac{h}{3} - 8$

View solution

Rearrange the formula to make h the subject.

$h =$ ..... [2]

23

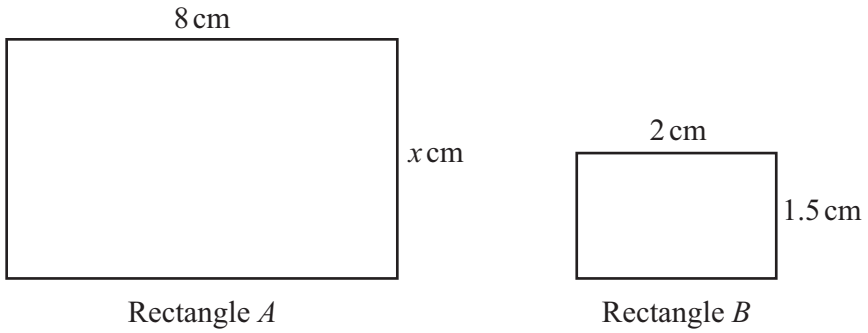

NOT TO SCALE

Rectangle A Rectangle B

Rectangle A is mathematically similar to rectangle B.

Work out the value of x.

$x =$ ..... [2]

24 Work out $3\frac{1}{2} - 1\frac{4}{7}$.

Give your answer as a mixed number in its simplest form.

..... [3]

25 Solve the simultaneous equations.

View solution

$$8x + 5y = 4$$
$$2x - y = 10$$

$x =$ .....

$y =$ .....

[3]

BLANK PAGE

BLANK PAGE

Permission to reproduce items where third-party owned material protected by copyright is included has been sought and cleared where possible. Every reasonable effort has been made by the publisher (UCLES) to trace copyright holders, but if any items requiring clearance have unwittingly been included, the publisher will be pleased to make amends at the earliest possible opportunity.

To avoid the issue of disclosure of answer-related information to candidates, all copyright acknowledgements are reproduced online in the Cambridge Assessment International Education Copyright Acknowledgements Booklet. This is produced for each series of examinations and is freely available to download at www.cambridgeinternational.org after the live examination series.

Cambridge Assessment International Education is part of Cambridge Assessment. Cambridge Assessment is the brand name of the University of Cambridge Local Examinations Syndicate (UCLES), which is a department of the University of Cambridge.

© UCLES 2025