Cambridge Assessment International Education

Cambridge IGCSE™

CANDIDATE NAME									
CENTRE NUMBER						CANDIDATE NUMBER				

MATHEMATICS **0580/22**

Paper 2 Non-calculator (Extended) **May/June 2025**

2 hours

You must answer on the question paper.

You will need: Geometrical instruments

INSTRUCTIONS
- Answer **all** questions.
- Use a black or dark blue pen. You may use an HB pencil for any diagrams or graphs.
- Write your name, centre number and candidate number in the boxes at the top of the page.
- Write your answer to each question in the space provided.
- Do **not** use an erasable pen or correction fluid.
- Do **not** write on any bar codes.
- Calculators must **not** be used in this paper.
- You may use tracing paper.
- You must show all necessary working clearly.

INFORMATION
- The total mark for this paper is 100.
- The number of marks for each question or part question is shown in brackets [ ].

This document has **20** pages. Any blank pages are indicated.

© UCLES 2025

List of formulas

Area, A, of triangle, base b, height h.	$A = \frac{1}{2}bh$
Area, A, of circle of radius r.	$A = \pi r^2$
Circumference, C, of circle of radius r.	$C = 2\pi r$
Curved surface area, A, of cylinder of radius r, height h.	$A = 2\pi rh$
Curved surface area, A, of cone of radius r, sloping edge l.	$A = \pi rl$
Surface area, A, of sphere of radius r.	$A = 4\pi r^2$
Volume, V, of prism, cross-sectional area A, length l.	$V = Al$
Volume, V, of pyramid, base area A, height h.	$V = \frac{1}{3}Ah$
Volume, V, of cylinder of radius r, height h.	$V = \pi r^2 h$
Volume, V, of cone of radius r, height h.	$V = \frac{1}{3}\pi r^2 h$
Volume, V, of sphere of radius r.	$V = \frac{4}{3}\pi r^3$
For the equation $ax^2 + bx + c = 0$, where $a \neq 0$,	$x = \frac{-b \pm \sqrt{b^2 - 4ac}}{2a}$

For the triangle shown,

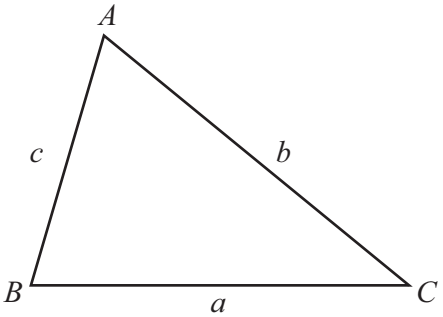

$$\frac{a}{\sin A} = \frac{b}{\sin B} = \frac{c}{\sin C}$$

$$a^2 = b^2 + c^2 - 2bc\cos A$$

$$\text{Area} = \frac{1}{2}ab\sin C$$

Calculators must **not** be used in this paper.

1 **(a)**

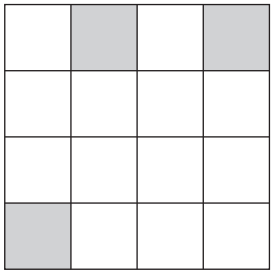

Shade **one** more small square so that the diagram has one line of symmetry. [1]

(b)

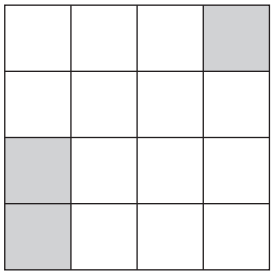

Shade **one** more small square so that the diagram has rotational symmetry of order 2. [1]

2 The scale drawing shows the positions of two villages, P and Q.

The scale is 1 cm represents 0.5 km.

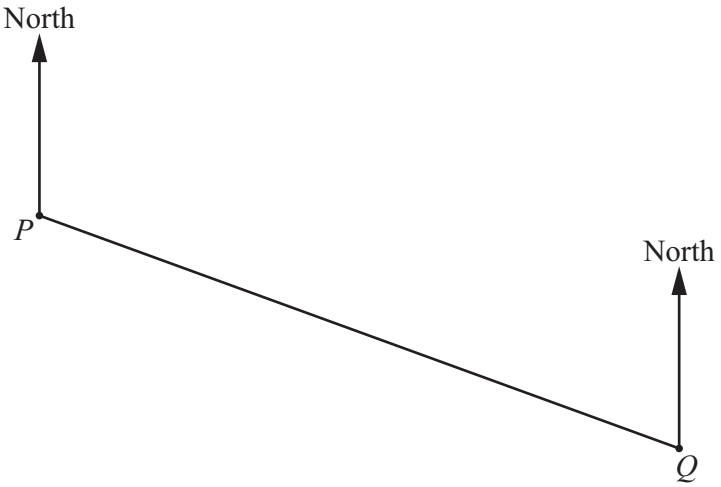

(a) Find the actual distance between village P and village Q.

..... km [2]

(b) Measure the bearing of village Q from village P.

..... [1]

3

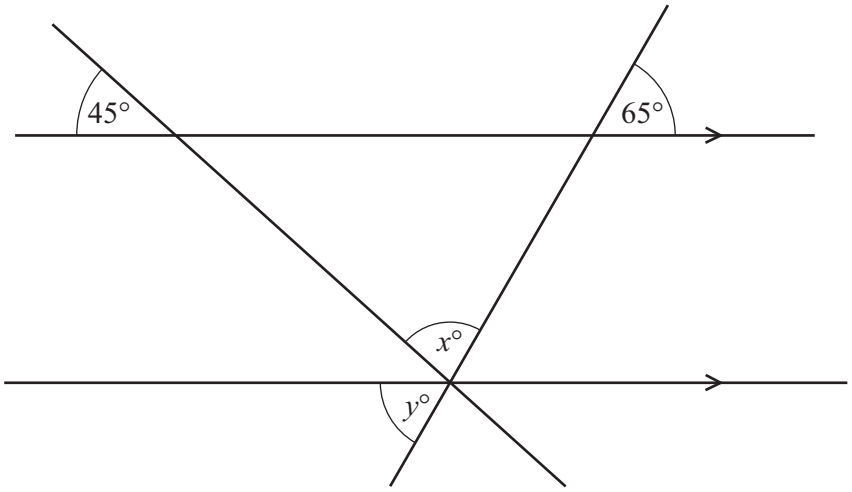

NOT TO SCALE

View solution

The diagram shows two straight lines intersecting two parallel lines.

Find the value of x and the value of y.

$x =$ .....

$y =$ .....

[3]

4

1	2	3	4	5	6	7

Samira picks one of these cards at random and replaces it.

(a) Find the probability that she picks an odd number.

View solution

..... [1]

(b) Samira repeats this 35 times.

View solution

Calculate the number of times Samira is expected to pick an odd number.

..... [1]

5

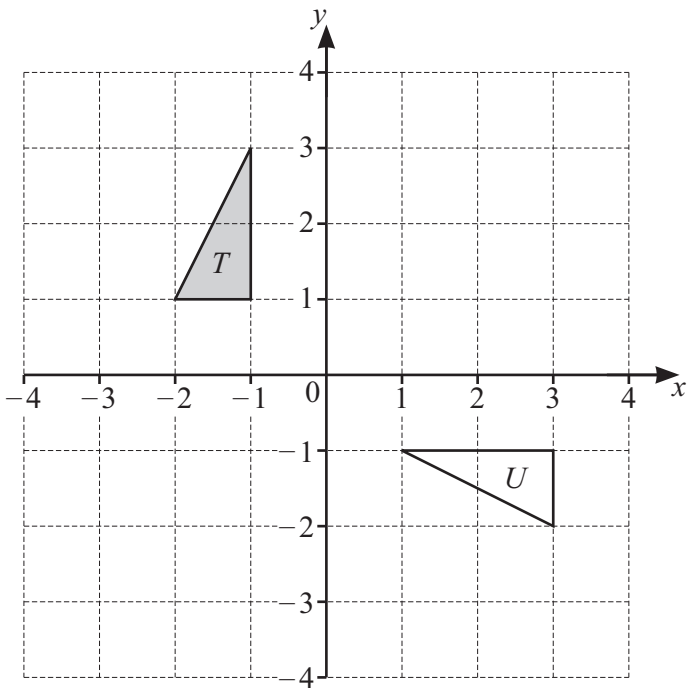

View solution

(a) Translate triangle T by the vector $\begin{pmatrix} 0 \\ -2 \end{pmatrix}$. [1]

View solution

(b) Describe fully the **single** transformation that maps triangle T onto triangle U.

.....

..... [3]

6 Solve.

View solution

(a) $8x + 7 = 39$

$x =$ ..... [2]

View solution

(b) $2(5y - 1) = 24$

$y =$ ..... [3]

© UCLES 2025

7 These are the first 4 terms of a sequence.

11 8 5 2

(a) Find the next term of this sequence.

View solution

..... [1]

(b) Find the nth term of this sequence.

View solution

..... [2]

8 Find the highest common factor (HCF) of 36 and 54.

View solution

..... [2]

9 A is the point $(3, -1)$.

$\overrightarrow{AB} = \begin{pmatrix} 2 \\ -4 \end{pmatrix}$

View solution

(a) $\overrightarrow{AC} = 2\overrightarrow{AB}$

Find the coordinates of the point C.

(..... , ...) [2]

View solution

(b) The length of AB is $k\sqrt{5}$.

Find the value of k.

$k =$ ..... [2]

View solution

(c) P is a point on AB.

$AP : PB = 1 : 3$

Find the position vector of P.

$\begin{pmatrix} \quad \\ \quad \end{pmatrix}$ [2]

© UCLES 2025

10

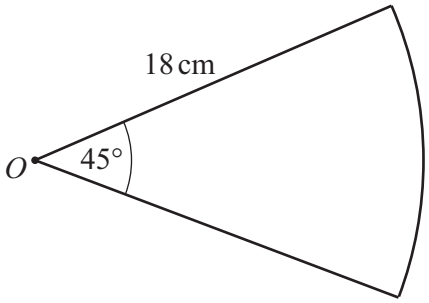

NOT TO SCALE

View solution

The diagram shows a sector of a circle, centre O.
The length of the arc is $n\pi$ cm .

Find the value of n.

$n =$ ..... [2]

11 **(a)** Write 0.007 08 in standard form.

View solution

..... [1]

(b) Work out $(3.8 \times 10^{22}) + (3.8 \times 10^{23})$.
Give your answer in standard form.

View solution

..... [2]

© UCLES 2025

12

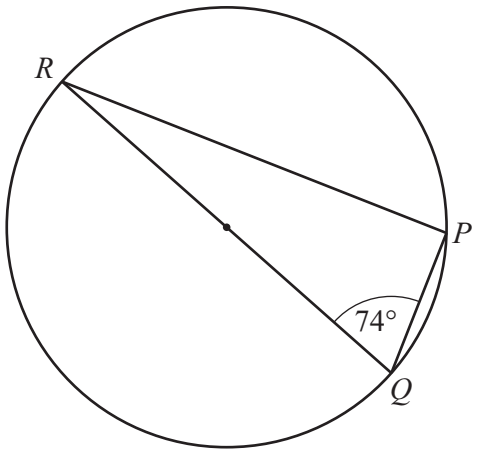

NOT TO SCALE

View solution

P, *Q* and *R* lie on a circle.
QR is a diameter.

Find angle *PRQ*.
Give geometrical reasons for your answer.

Angle *PRQ* = ... because .....

..... [2]

13 (a) 100 students solve a puzzle.
The table shows information about the time taken by each student to solve the puzzle.

View solution

Time (t seconds)	$20 < t \leqslant 40$	$40 < t \leqslant 60$	$60 < t \leqslant 100$
Frequency	30	40	30

(i) Work out an estimate of the mean.

.....s [4]

(ii) Complete the histogram to show the information in the table.

View solution

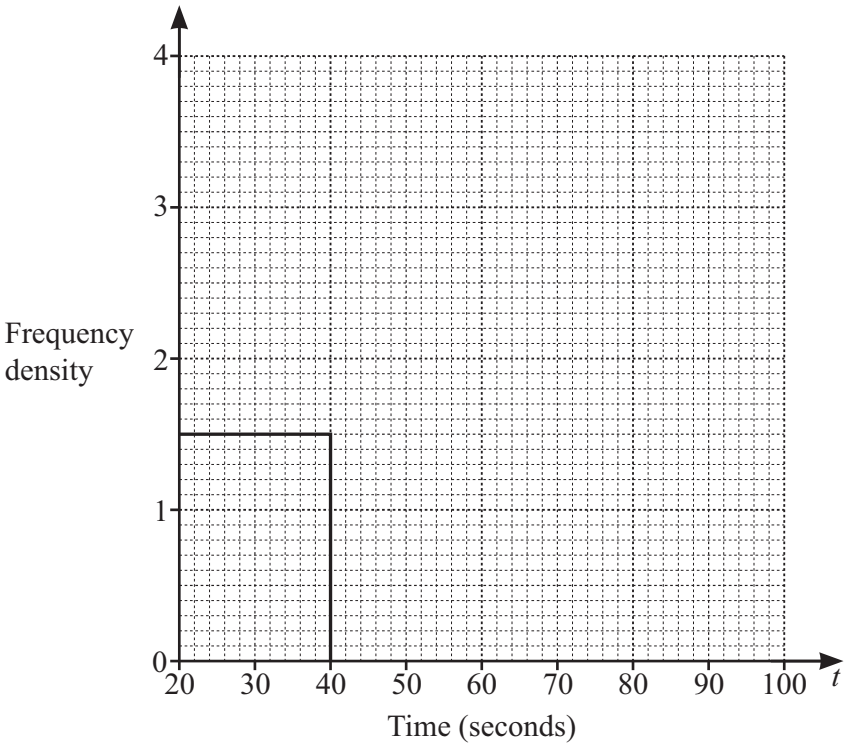

[2]

© UCLES 2025

(b) 80 adults solve the same puzzle as the students.
The cumulative frequency table shows information about the time taken by each adult to solve the puzzle.

View solution

Time (t seconds)	$t \leqslant 20$	$t \leqslant 40$	$t \leqslant 60$	$t \leqslant 80$	$t \leqslant 100$	$t \leqslant 120$
Cumulative frequency	0	12	36	60	74	80

(i) On the grid, draw a cumulative frequency diagram.

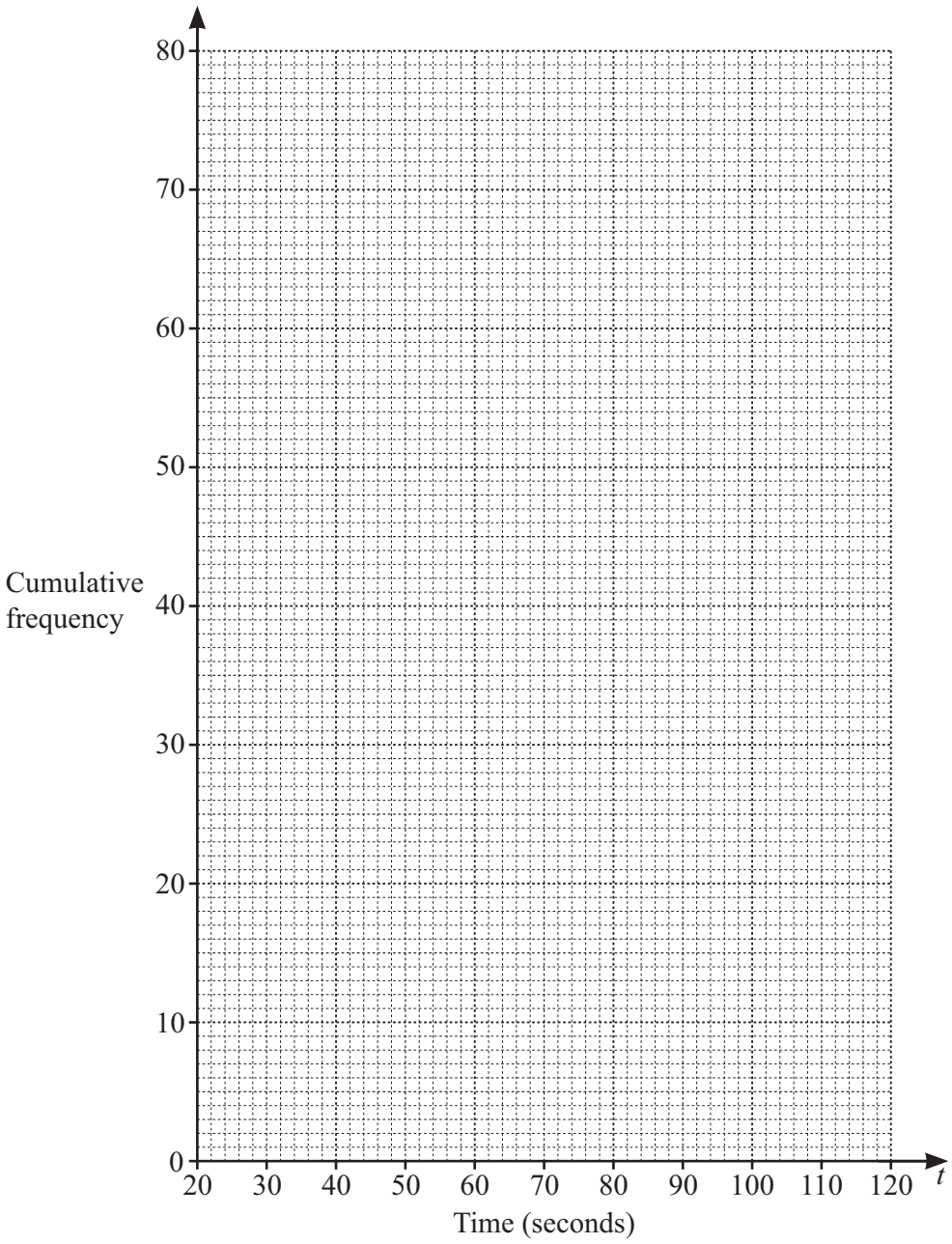

[3]

(ii) Use your cumulative frequency diagram to find an estimate for

View solution

(a) the median

..... s [1]

(b) the lower quartile.

..... s [1]

14 Write $0.2\dot{5}$ as a fraction.

View solution

..... [2]

15

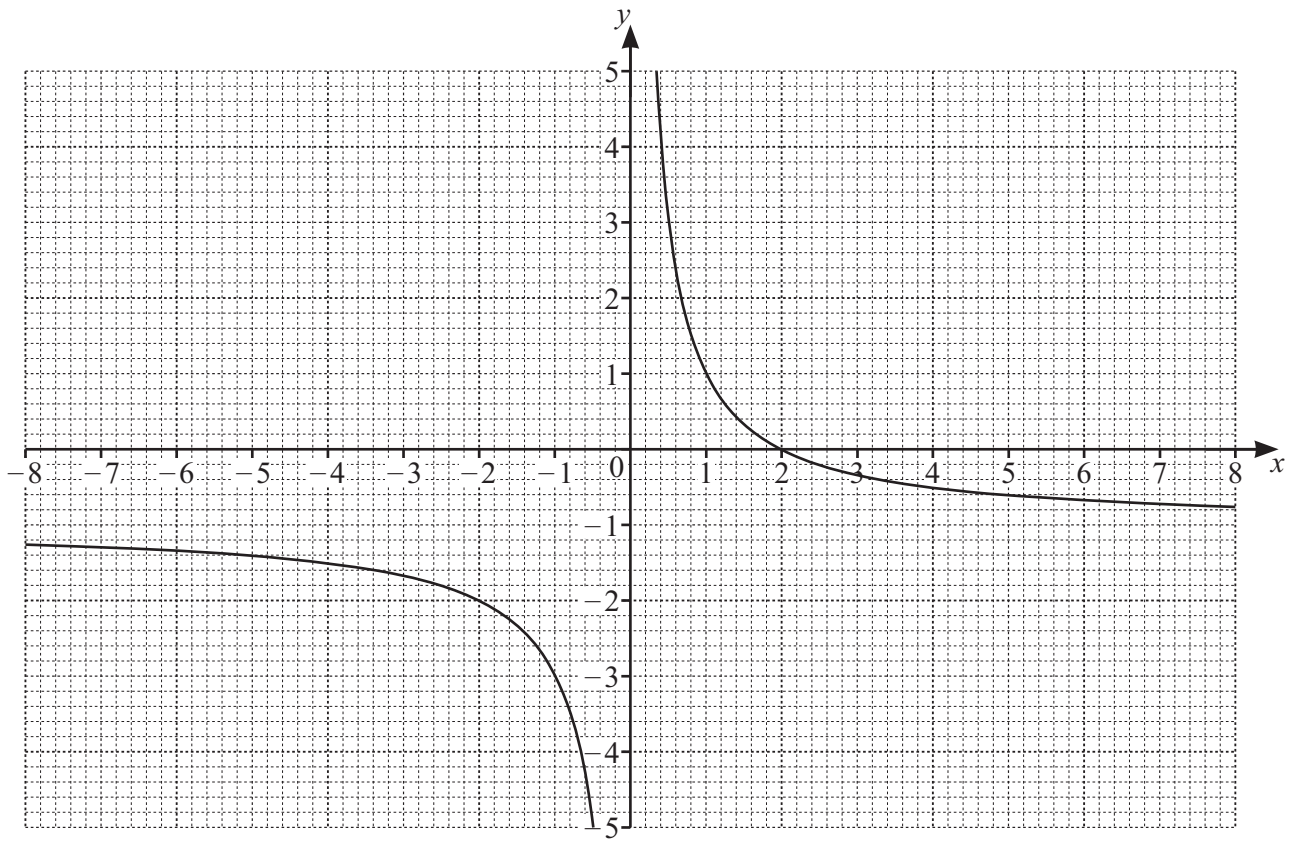

The diagram shows the graph of $y = \frac{2}{x} - 1$.

(a) Write down the coordinates of the point where the graph crosses the x-axis.

View solution

(..... , ...) [1]

(b) Write down the equation of each asymptote.

View solution

.....

.....

[2]

(c) By drawing a suitable straight line on the grid, solve $\frac{2}{x} - x - 1 = 0$.

View solution

$x =$ ..... or $x =$ ..... [3]

© UCLES 2025

16

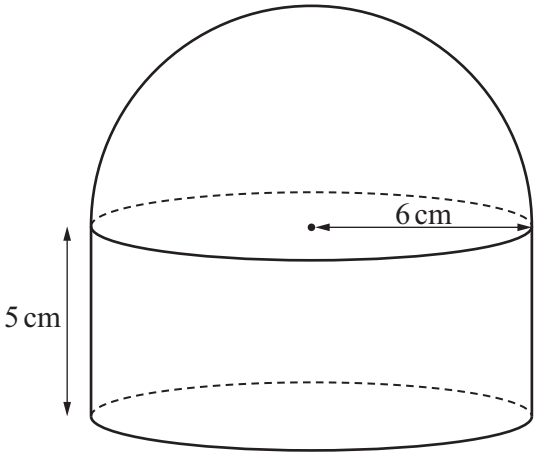

NOT TO SCALE

The diagram shows a solid made by joining a hemisphere to a cylinder.
The radius of both the hemisphere and the cylinder is 6 cm.
The height of the cylinder is 5 cm.

Find the **total** surface area of the solid.
Give your answer in terms of π.

..... cm^2 [4]

17 Find the value of

(a) $125^{\frac{2}{3}}$

..... [2]

(b) $4^{-\frac{5}{2}}$.

..... [2]

© UCLES 2025

18 **(a)** $\dfrac{9}{\sqrt{3}}$

View solution

Rationalise the denominator.
Give your answer in its simplest form.

..... [2]

(b) $(5-\sqrt{2})(1+3\sqrt{2}) = c+k\sqrt{2}$

View solution

Find the value of c and the value of k.

$c =$ .....

$k =$ .....

[2]

19 Write as a single fraction in its simplest form.

(a) $\dfrac{5a}{6} \times \dfrac{3b}{a}$

View solution

..... [2]

(b) $\dfrac{p}{2} + \dfrac{3t}{4}$

View solution

..... [2]

(c) $\dfrac{2}{x-2} - \dfrac{3}{x+1}$

View solution

..... [3]

© UCLES 2025

20 $y \propto \frac{1}{\sqrt{x}}$

View solution

(a) When $x = 9$, $y = 2$.

Find the value of y when $x = 36$.

$y =$ ..... [3]

View solution

(b) When x is increased by a factor of 4, the value of y changes by a factor of p.

Find the value of p.

$p =$ ..... [1]

© UCLES 2025

21

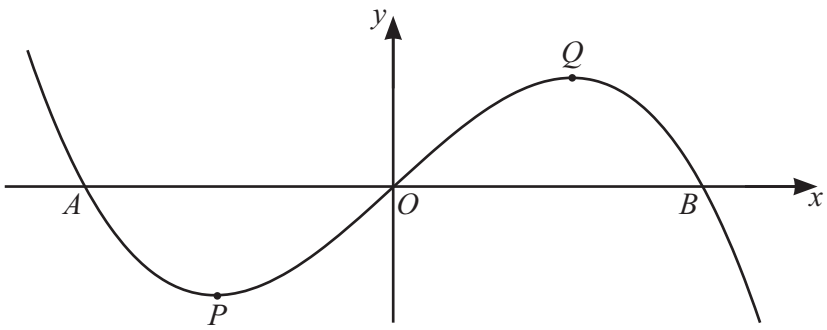

NOT TO SCALE

The diagram shows the graph of $y = 3x - x^3$.
The graph crosses the x-axis at A, at O and at B.
The turning points of the graph are at P and at Q.

(a) Find the x-coordinate of A and the x-coordinate of B.
Give your answers as exact values.

View solution

x-coordinate of A .....

x-coordinate of B .....

[3]

(b) (i) Differentiate $3x - x^3$.

View solution

..... [2]

(ii) Find the coordinates of P and Q.

View solution

P (..... , ...)

Q (..... , ...)

[4]

© UCLES 2025

22 **(a)** Write down the exact value of $\tan 60°$.

View solution

..... [1]

(b) Solve $2\sin x - 1 = 0$ for $0° \leqslant x \leqslant 360°$.

View solution

$x =$ ..... or $x =$ ..... [3]

23

View solution

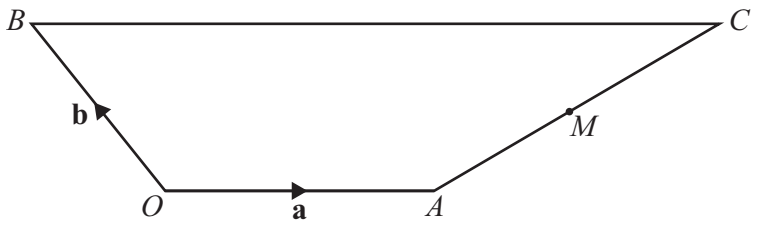

NOT TO SCALE

In the diagram, OA is parallel to BC.
$BC = 3OA$
M is the midpoint of AC.
The position vector of A is **a** and the position vector of B is **b**.

Find the position vector of M.
Give your answer in terms of **a** and **b**, in its simplest form.

..... [3]

24 The line $y = 7x + 3$ intersects the curve $y = x^2 + 5x - 12$ at the points A and B.

Find the coordinates of A and B.

View solution

A (..... , ...)

B (..... , ...)

[5]

BLANK PAGE

Permission to reproduce items where third-party owned material protected by copyright is included has been sought and cleared where possible. Every reasonable effort has been made by the publisher (UCLES) to trace copyright holders, but if any items requiring clearance have unwittingly been included, the publisher will be pleased to make amends at the earliest possible opportunity.

To avoid the issue of disclosure of answer-related information to candidates, all copyright acknowledgements are reproduced online in the Cambridge Assessment International Education Copyright Acknowledgements Booklet. This is produced for each series of examinations and is freely available to download at www.cambridgeinternational.org after the live examination series.

Cambridge Assessment International Education is part of Cambridge Assessment. Cambridge Assessment is the brand name of the University of Cambridge Local Examinations Syndicate (UCLES), which is a department of the University of Cambridge.

© UCLES 2025