CAMBRIDGE
International Education

Cambridge IGCSE™

CANDIDATE NAME									
CENTRE NUMBER						CANDIDATE NUMBER			

MATHEMATICS **0580/41**

Paper 4 Calculator (Extended) **May/June 2026**

2 hours

You must answer on the question paper.

You will need: Geometrical instruments

INSTRUCTIONS
- Answer **all** questions.
- Use a black or dark blue pen. You may use an HB pencil for any diagrams or graphs.
- Write your name, centre number and candidate number in the boxes at the top of the page.
- Write your answer to each question in the space provided.
- Do **not** use an erasable pen. Do **not** use correction fluid or tape.
- Do **not** write on any bar codes.
- You should use a scientific calculator where appropriate.
- You may use tracing paper.
- You must show all necessary working clearly.
- Give non-exact numerical answers correct to 3 significant figures, or 1 decimal place for angles in degrees, unless a different level of accuracy is specified in the question.
- For π, use either your calculator value or 3.142.

INFORMATION
- The total mark for this paper is 100.
- The number of marks for each question or part question is shown in brackets [ ].

This document has **20** pages. Any blank pages are indicated.

© Cambridge University Press & Assessment 2026

List of formulas

Area, A, of triangle, base b, height h.	$A = \frac{1}{2}bh$
Area, A, of circle of radius r.	$A = \pi r^2$
Circumference, C, of circle of radius r.	$C = 2\pi r$
Curved surface area, A, of cylinder of radius r, height h.	$A = 2\pi rh$
Curved surface area, A, of cone of radius r, sloping edge l.	$A = \pi rl$
Surface area, A, of sphere of radius r.	$A = 4\pi r^2$
Volume, V, of prism, cross-sectional area A, length l.	$V = Al$
Volume, V, of pyramid, base area A, height h.	$V = \frac{1}{3}Ah$
Volume, V, of cylinder of radius r, height h.	$V = \pi r^2 h$
Volume, V, of cone of radius r, height h.	$V = \frac{1}{3}\pi r^2 h$
Volume, V, of sphere of radius r.	$V = \frac{4}{3}\pi r^3$
For the equation $ax^2 + bx + c = 0$, where $a \neq 0$,	$x = \frac{-b \pm \sqrt{b^2 - 4ac}}{2a}$

For the triangle shown,

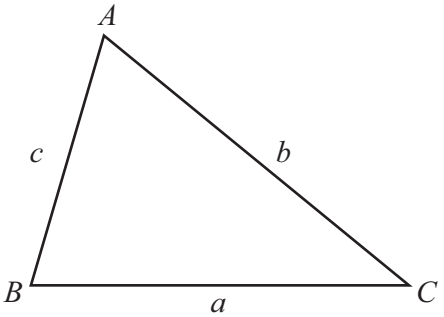

$$\frac{a}{\sin A} = \frac{b}{\sin B} = \frac{c}{\sin C}$$

$$a^2 = b^2 + c^2 - 2bc\cos A$$

$$\text{Area} = \frac{1}{2}ab\sin C$$

© Cambridge University Press & Assessment 2026

1 Simplify.

View solution

$4x + 3y + 2x - 10y$

..... [2]

2 Calculate.

(a) $\dfrac{1}{0.025^2}$

View solution

..... [1]

(b) $\sqrt[4]{410 + 4^{-2}}$

View solution

..... [1]

3

View solution

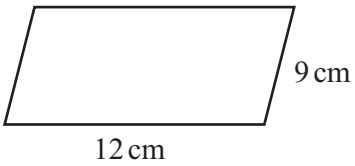

NOT TO SCALE

The diagram shows a parallelogram.

Find the perimeter of the parallelogram.

..... cm [1]

© Cambridge University Press & Assessment 2026

4 Ben changes 150 pounds (£) into dollars ($).
The exchange rate is £1 = $1.32 .

View solution

Calculate the number of dollars Ben receives.

$ ..... [1]

5

$\frac{1}{11}$	1	$\sqrt{41}$	51	61	$\sqrt{81}$	91

View solution

Complete each of these statements with a number from the list.

The cube number is .....

The prime number is .....

The irrational number is .....

[3]

6 Represent the inequality $-3 \leqslant x < 2$ on the number line.

View solution

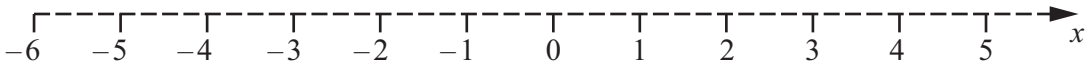

[2]

© Cambridge University Press & Assessment 2026

7 The original value of a car is $23 000.
The value of the car decreases by 35% of its original value.

View solution

Calculate the value of the car after the decrease.

$ ..... [2]

8

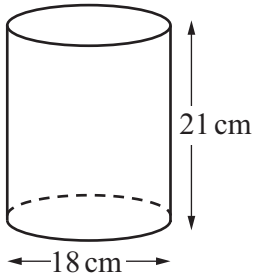

NOT TO SCALE

The diagram shows a cylinder with diameter 18 cm and height 21 cm.

View solution

(a) Calculate the volume of the cylinder.

..... cm^3 [2]

View solution

(b) Find the capacity of the cylinder in litres.

..... litres [1]

© Cambridge University Press & Assessment 2026

9 Factorise.

View solution

$21y^2 - 7y$

..... [2]

10

View solution

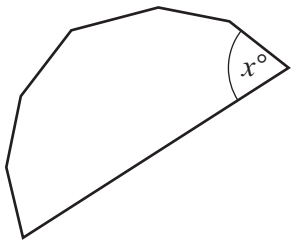

NOT TO SCALE

A regular polygon has 12 sides.
The diagram shows half of this regular polygon.

Find the value of x.

$x =$ ..... [3]

© Cambridge University Press & Assessment 2026

11 The diagram shows a pentagon made by joining a trapezium to a right-angled triangle.

View solution

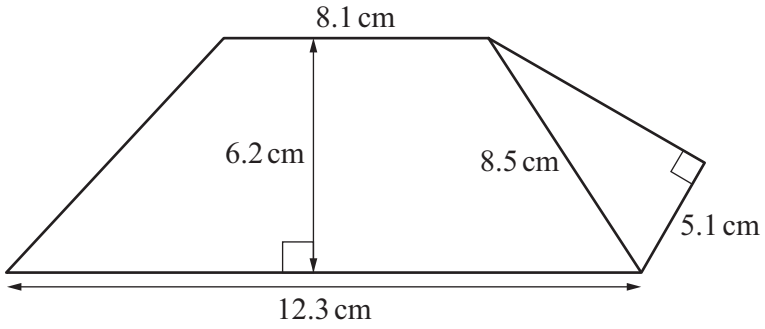

NOT TO SCALE

Calculate the area of the pentagon.

..... cm^2 [4]

© Cambridge University Press & Assessment 2026

12 **(a)** These are four values.

View solution

200 51 $2n$ $n+1$

The mean of the four values is $3n$.

Find the value of n.

$n =$ ..... [3]

(b) The table shows some information about the mass of each of 200 boxes.

View solution

mass (m grams)	$0 < m \leqslant 20$	$20 < m \leqslant 40$	$40 < m \leqslant 60$	$60 < m \leqslant 80$
frequency	29	67	55	49

Calculate an estimate of the mean.

..... g [4]

© Cambridge University Press & Assessment 2026

13 Factorise.

View solution

$3x + 9y + 5px + 15py$

..... [2]

14 The speed–time graph shows information about the first 10 seconds of a car journey.

View solution

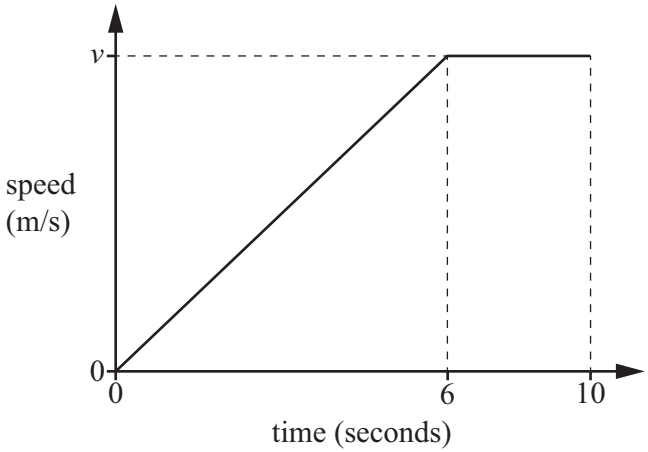

NOT TO SCALE

The car accelerates at a constant rate before travelling at a constant speed.
The car travels a total distance of 119 metres.

Work out the value of v.

$v =$ ..... [3]

15 Solve the inequality.

$$7x - 2 \leqslant 3(x + 2)$$

View solution

..... [3]

16

View solution

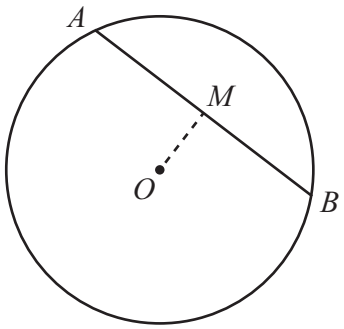

NOT TO SCALE

The diagram shows a circle, centre O.
AB is a chord of length 14 cm.
M is the midpoint of AB and $OM = 6$ cm.

Calculate angle OAM.

angle $OAM =$ ..... [2]

© Cambridge University Press & Assessment 2026

17 **(a)** Sachin invests \$7200 at a rate of 3% per year simple interest.

View solution

Find the total value of the investment at the end of 5 years.

\$ ..... [3]

(b) The mass of a large packet of rice is 30% greater than the mass of a small packet of rice.
The mass of the large packet of rice is 650 g.

View solution

Calculate the mass of the small packet of rice.

..... g [2]

(c) In an experiment, Jenny starts with 4000 bacteria.
The number of bacteria is increasing exponentially at a rate of r% per day.
At the end of 6 days, the number of bacteria is 4598.

View solution

Find the value of r.

$r =$ ..... [3]

© Cambridge University Press & Assessment 2026

18

View solution

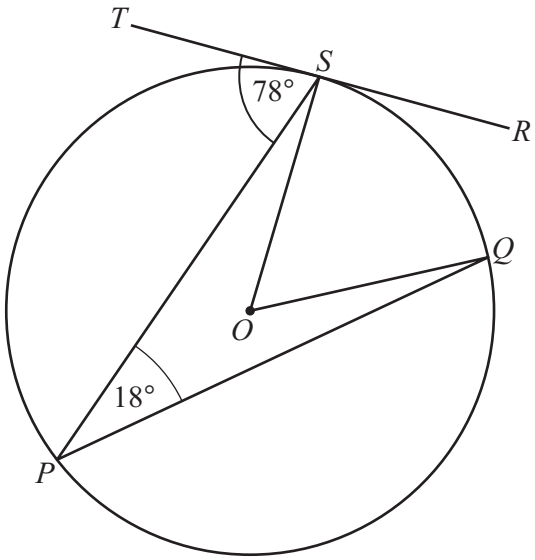

NOT TO SCALE

P, Q and S are points on a circle, centre O.
RT is a tangent to the circle at S.

Find the ratio angle PSO : angle PQO.
Give your answer in its simplest form.

angle PSO : angle PQO = ... : ..... [4]

© Cambridge University Press & Assessment 2026

19 **(a)** A bag contains some coloured counters.
The probability of picking a red counter from the bag is 0.24 .

View solution

(i) Find the probability of not picking a red counter from the bag.

..... [1]

View solution

(ii) Sunil picks a counter at random from the bag and then replaces it.
He then picks a second counter at random from the bag.

Work out the probability that only one of the counters is red.

..... [2]

View solution

(b) A box contains 50 pens.
There are n blue pens in the box.

Ahmed picks two of the pens from the box at random without replacement.
The probability that both pens are blue is $\frac{3}{35}$.

Find the value of n.

$n =$ ..... [3]

© Cambridge University Press & Assessment 2026

20 **(a)** $f(x) = x^2 - 1$ $g(x) = 10 - 3x$

View solution

(i) Find $f(7)$.

..... [1]

(ii) Find the positive solution of $fg(x) = 120$.

View solution

$x =$ ..... [4]

(b) $h(x) = 2x - 3$

View solution

The domain of $h(x)$ is $\{-5, 0, 2\}$.

Find the range of $h(x)$.

{.....} [2]

(c) $j(x) = 2^{3x}$

View solution

Solve the equation $j^{-1}(x) = 4$.

$x =$ ..... [2]

© Cambridge University Press & Assessment 2026

21

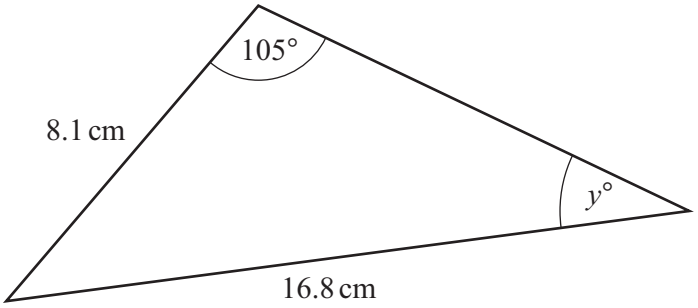

NOT TO SCALE

View solution

Calculate the value of y.

$y =$ ..... [3]

22 Rearrange the formula to make m the subject.

View solution

$$5m = x(7 + m)$$

$m =$ ..... [3]

© Cambridge University Press & Assessment 2026

23

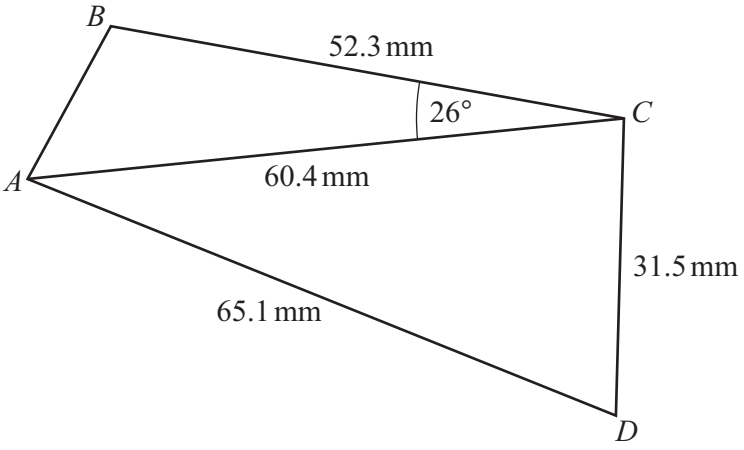

NOT TO SCALE

The diagram shows two triangles, *ABC* and *ACD*.

(a) Calculate the area of triangle *ABC*.

View solution

..... mm^2 [2]

(b) Calculate angle *ACD*.

View solution

angle *ACD* = ... [3]

© Cambridge University Press & Assessment 2026

24 **(a)** Sketch the graph of $y = \sin x$ for $0° \leqslant x \leqslant 360°$.

View solution

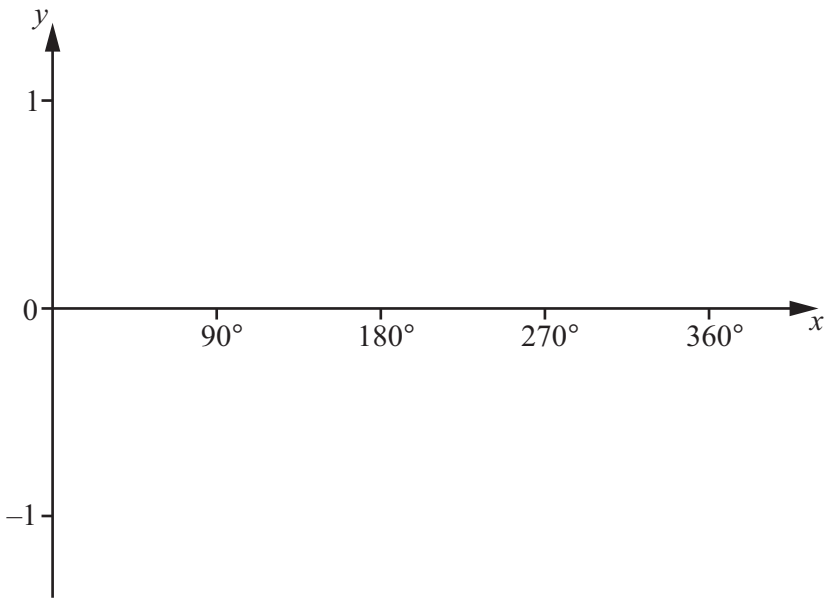

[2]

(b) Solve the equation $5 \sin x + 7 = 3$ for $0° \leqslant x \leqslant 360°$.

View solution

$x =$ ..... or $x =$ ..... [3]

© Cambridge University Press & Assessment 2026

25 $x^{-\frac{1}{3}} = 16x^{-1}$

View solution

Find the positive value of x.

$x =$ ..... [3]

View solution

26 Simplify.

$$(6x-30) \times \frac{x^2+7x+10}{3x^2-75}$$

..... [4]

View solution

27 Beth runs 28 km, correct to the nearest kilometre.
Her average speed is 10 km/h, correct to the nearest 1 km/h.

Work out the upper bound of the time taken for Beth's run.

..... hours [3]

© Cambridge University Press & Assessment 2026

28

View solution

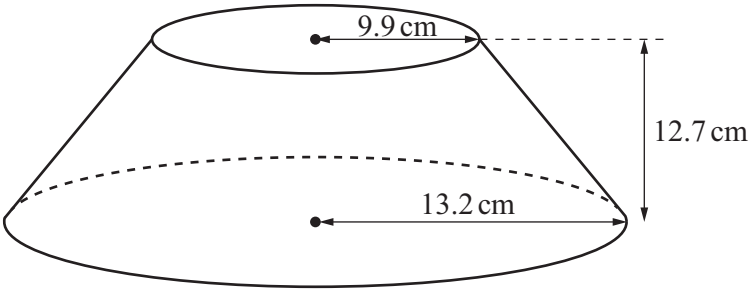

NOT TO SCALE

The diagram shows a frustum with height 12.7 cm.

Calculate the volume of the frustum.

..... cm^3 [5]

© Cambridge University Press & Assessment 2026

BLANK PAGE

Permission to reproduce items where third-party owned material protected by copyright is included has been sought and cleared where possible. Every reasonable effort has been made by the publisher (Cambridge University Press & Assessment) to trace copyright holders, but if any items requiring clearance have unwittingly been included, the publisher will be pleased to make amends at the earliest possible opportunity.

To avoid the issue of disclosure of answer-related information to candidates, all copyright acknowledgements are reproduced online in our Copyright Acknowledgements Booklet. This is produced for each series of examinations and is freely available to download at www.cambridgeinternational.org after the live examination series.

Cambridge International Education is the name of our awarding body and a part of Cambridge University Press & Assessment, which is a department of the University of Cambridge.

© Cambridge University Press & Assessment 2026