Cambridge IGCSE

Cambridge International Examinations
Cambridge International General Certificate of Secondary Education

CANDIDATE NAME									
CENTRE NUMBER						CANDIDATE NUMBER				

MATHEMATICS **0580/42**

Paper 4 (Extended) **October/November 2014**

2 hours 30 minutes

Candidates answer on the Question Paper.

Additional Materials: Electronic calculator
Tracing paper (optional)
Geometrical instruments

READ THESE INSTRUCTIONS FIRST

Write your Centre number, candidate number and name on all the work you hand in.
Write in dark blue or black pen.
You may use an HB pencil for any diagrams or graphs.
Do not use staples, paper clips, glue or correction fluid.
DO **NOT** WRITE IN ANY BARCODES.

Answer **all** questions.
If working is needed for any question it must be shown below that question.
Electronic calculators should be used.
If the degree of accuracy is not specified in the question, and if the answer is not exact, give the answer to three significant figures. Give answers in degrees to one decimal place.
For π, use either your calculator value or 3.142.

At the end of the examination, fasten all your work securely together.
The number of marks is given in brackets [ ] at the end of each question or part question.
The total of the marks for this paper is 130.

The syllabus is approved for use in England, Wales and Northern Ireland as a Cambridge International Level 1/Level 2 Certificate.

This document consists of **19** printed pages and **1** blank page.

© UCLES 2014

CAMBRIDGE International Examinations

1 **(a)** Alfonso has \$75 to spend on the internet.
He spends some of the money on music, films and books.

View solution

(i) The money he spends on music, films and books is in the ratio

music : films : books = 5 : 3 : 7.

He spends \$16.50 on music.

Calculate the **total** amount he spends on music, films and books.

Answer(a)(i) \$ ..... [3]

(ii) Find this total amount as a percentage of the \$75.

View solution

Answer(a)(ii) ..... % [1]

(b) The download times for the music, films and books are in the ratio

View solution

music : films : books = 2 : 9 : 1.

The **total** download time is 3 hours and 33 minutes.

Calculate the download time for the films.
Give your answer in hours, minutes and seconds.

Answer(b) ..... hours ..... minutes ..... seconds [3]

(c) The cost of \$16.50 for the music was a reduction of 12% on the original cost.

View solution

Calculate the original cost of the music.

Answer(c) \$..... [3]

© UCLES 2014

2 **(a)** Solve the inequality.

$$7x - 5 > 3(2 - 5x)$$

View solution

Answer(a) ..... [3]

(b) **(i)** Factorise completely.

$$pq - 2q - 8 + 4p$$

View solution

Answer(b)(i) ..... [2]

(ii) Factorise.

$$9p^2 - 25$$

View solution

Answer(b)(ii) ..... [1]

(c) Solve this equation by factorising.

$$5x^2 + x - 18 = 0$$

View solution

Answer(c) $x =$ ..... or $x =$ ..... [3]

© UCLES 2014

3 The time, t seconds, taken for each of 50 chefs to cook an omelette is recorded.

Time (t seconds)	$20 < t \leqslant 25$	$25 < t \leqslant 30$	$30 < t \leqslant 35$	$35 < t \leqslant 40$	$40 < t \leqslant 45$	$45 < t \leqslant 50$
Frequency	2	6	7	19	9	7

(a) Write down the modal time interval.

View solution

Answer(a) ..... s [1]

(b) Calculate an estimate of the mean time.
Show all your working.

View solution

Answer(b) ..... s [4]

(c) A new frequency table is made from the results shown in the table opposite.

View solution

Time (t seconds)	$20 < t \leqslant 35$	$35 < t \leqslant 40$	$40 < t \leqslant 50$
Frequency			

(i) Complete the table. [1]

(ii) On the grid, draw a histogram to show the information in this new table.

View solution

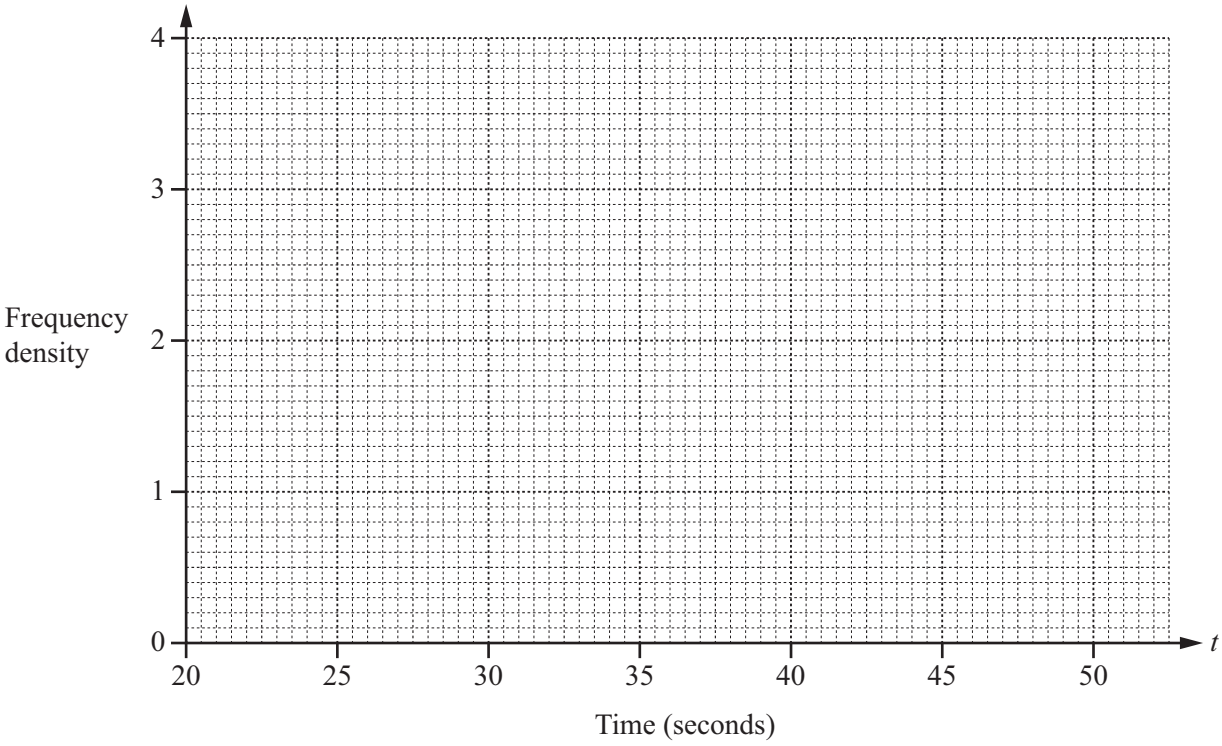

[3]

4

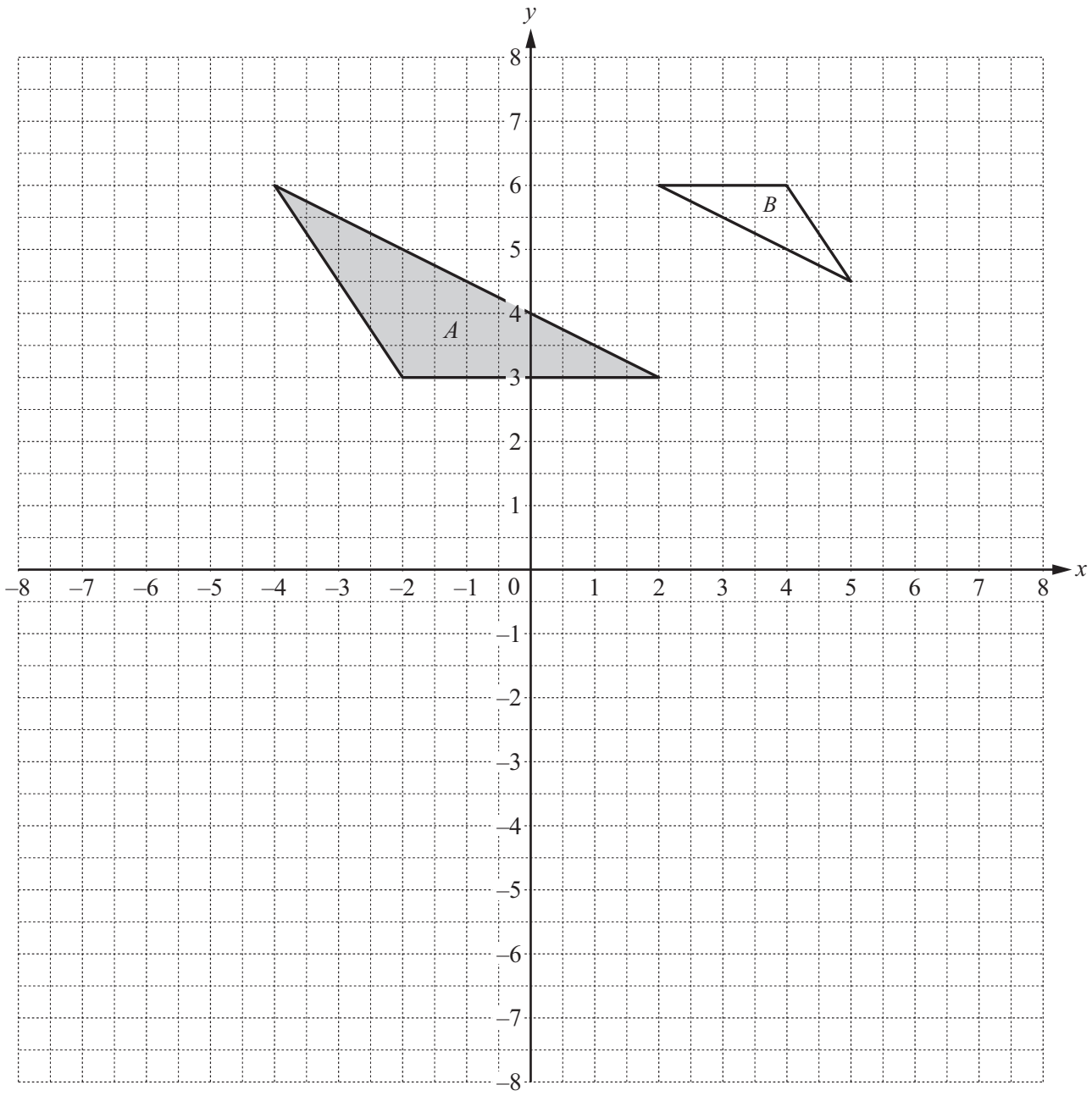

View solution

(a) Describe fully the **single** transformation that maps triangle *A* onto triangle *B*.

Answer(a) .....

..... [3]

(b) On the grid, draw the image of

View solution

(i) triangle A after a reflection in the line $x = -3$, [2]

(ii) triangle A after a rotation about the origin through 270° anticlockwise, [2]

(iii) triangle A after a translation by the vector $\begin{pmatrix} -1 \\ -5 \end{pmatrix}$. [2]

(c) **M** is the matrix that represents the transformation in **part (b)(ii)**.

View solution

(i) Find **M**.

Answer(c)(i) **M** = $\begin{pmatrix} & \\ & \end{pmatrix}$ [2]

(ii) Describe fully the **single** transformation represented by $\mathbf{M}^{-1}$, the inverse of **M**.

View solution

Answer(c)(ii) .....

..... [2]

5 $f(x) = 5x - 2$ $g(x) = \frac{7}{x-3}$, $x \neq 3$ $h(x) = 2x^2 + 7x$

View solution

(a) Work out

(i) f(2),

Answer(a)(i) ..... [1]

(ii) hg(17).

View solution

Answer(a)(ii) ..... [2]

(b) Solve $g(x) = x + 3$.

View solution

Answer(b) x = ... or x = ... [3]

© UCLES 2014

(c) Solve $h(x) = 11$, showing all your working and giving your answers correct to 2 decimal places.

View solution

Answer(c) $x =$ ..... or $x =$ ..... [5]

(d) Find $f^{-1}(x)$.

View solution

Answer(d) $f^{-1}(x) =$ ..... [2]

(e) Solve $g^{-1}(x) = -0.5$.

View solution

Answer(e) $x =$ ..... [1]

6 $f(x) = 5x^3 - 8x^2 + 10$

View solution

(a) Complete the table of values.

x	–1.5	–1	–0.5	0	0.5	0.75	1	1.5	2
$f(x)$	–24.9			10	8.6	7.6	7		18

[3]

View solution

(b) Draw the graph of $y = f(x)$ for $-1.5 \leqslant x \leqslant 2$.

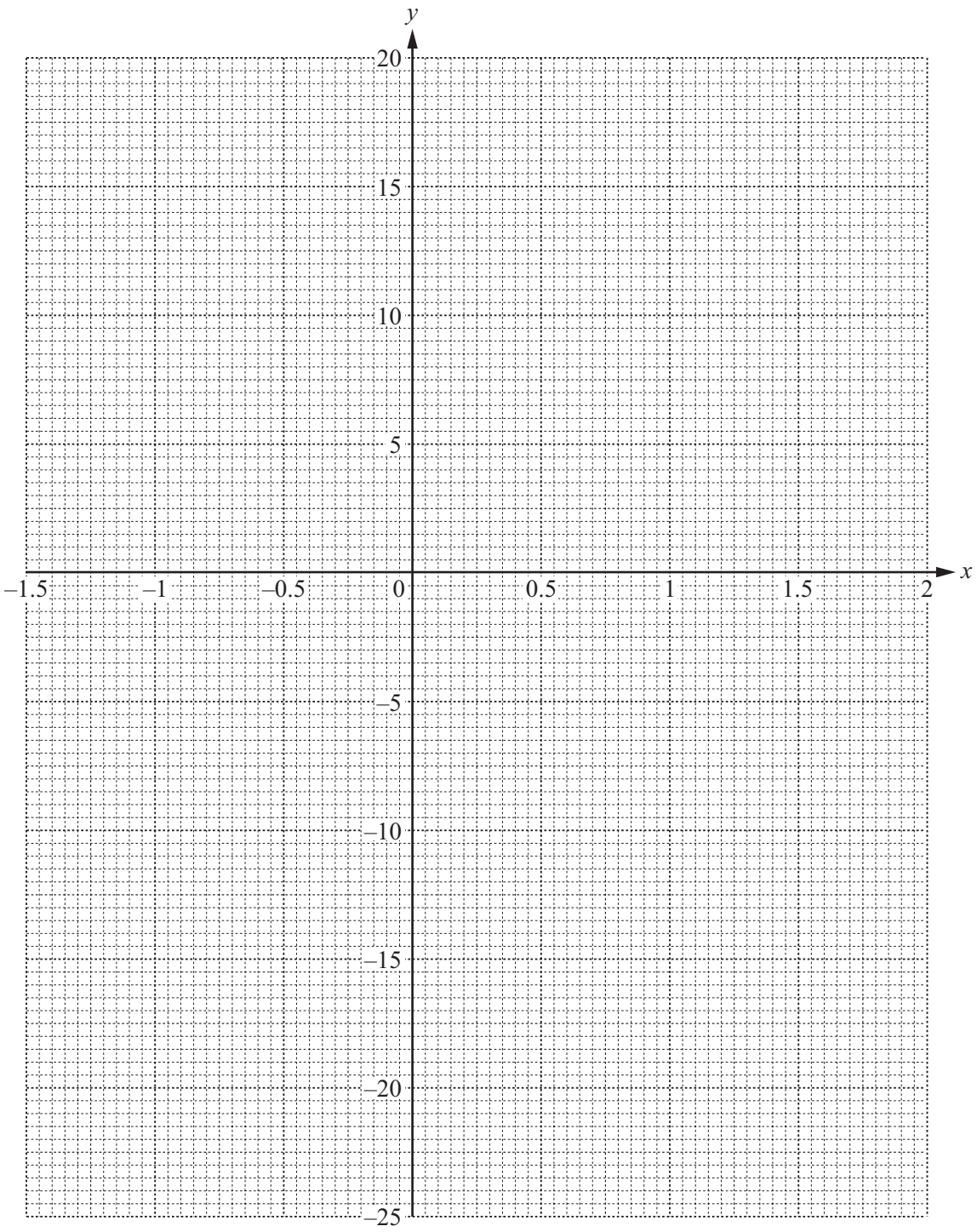

[4]

(c) Use your graph to find an **integer** value of k so that $f(x) = k$ has

View solution

(i) exactly one solution,

Answer(c)(i) k = ... [1]

(ii) three solutions.

View solution

Answer(c)(ii) k = ... [1]

(d) By drawing a suitable straight line on the graph, solve the equation $f(x) = 15x + 2$ for $-1.5 \leqslant x \leqslant 2$.

View solution

Answer(d) x = ... or x = ... [4]

(e) Draw a tangent to the graph of $y = f(x)$ at the point where $x = 1.5$.

View solution

Use your tangent to estimate the gradient of $y = f(x)$ when $x = 1.5$.

Answer(e) ..... [3]

© UCLES 2014

7

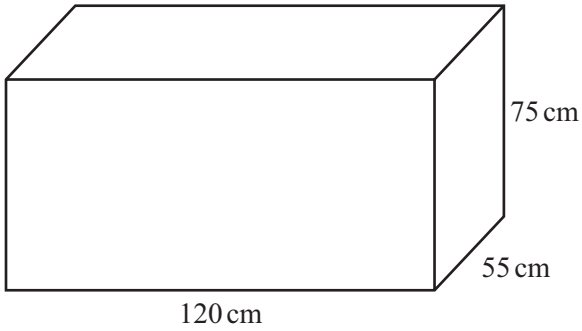

NOT TO SCALE

The diagram shows a water tank in the shape of a cuboid measuring 120 cm by 55 cm by 75 cm.
The tank is filled completely with water.

(a) Show that the capacity of the water tank is 495 litres.

View solution

Answer(a)

[2]

(b) (i) The water from the tank flows into an empty cylinder at a uniform rate of 750 millilitres per second.

Calculate the length of time, in minutes, for the water to be completely emptied from the tank.

View solution

Answer(b)(i) ..... min [2]

(ii) When the tank is completely empty, the height of the water in the cylinder is 112 cm.

View solution

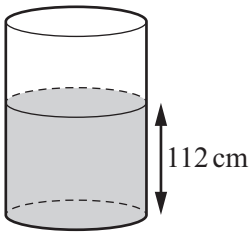

NOT TO SCALE

Calculate the radius of the cylinder.

Answer(b)(ii) ..... cm [3]

© UCLES 2014

(c)

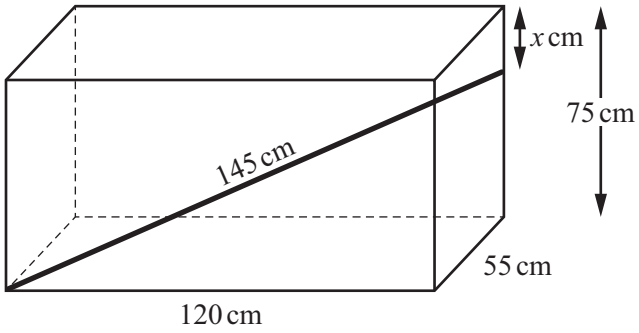

NOT TO SCALE

View solution

A rod of length 145 cm is placed inside the water tank.
One end of the rod is in the bottom corner of the tank as shown.
The other end of the rod is x cm below the top corner of the tank as shown.

Calculate the value of x.

Answer(c) $x =$ ..... [4]

(d) Calculate the angle that the rod makes with the base of the tank.

View solution

Answer(d) ..... [3]

8

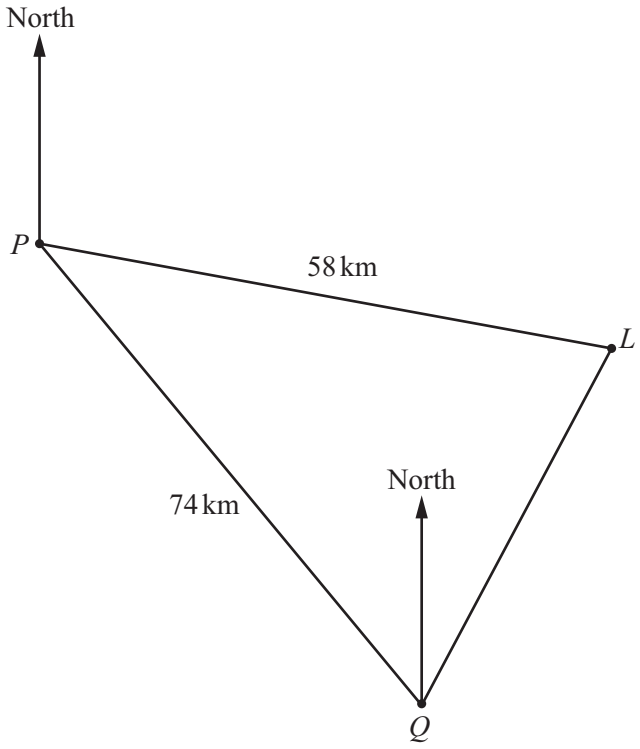

NOT TO SCALE

A ship sails from port P to port Q.
Q is 74 km from P on a bearing of 142°.
A lighthouse, L, is 58 km from P on a bearing of 110°.

(a) Show that the distance LQ is 39.5 km correct to 1 decimal place.

View solution

Answer(a)

[5]

(b) Use the sine rule to calculate angle PQL.

View solution

Answer(b) Angle PQL = ... [3]

© UCLES 2014

(c) Find the bearing of

(i) P from Q,

View solution

Answer(c)(i) ..... [2]

(ii) L from Q.

View solution

Answer(c)(ii) ..... [1]

(d) The ship takes 2 hours and 15 minutes to sail the 74 km from P to Q.

View solution

Calculate the average speed in knots.
[1 knot = 1.85 km/h]

Answer(d) ..... knots [3]

(e) Calculate the shortest distance from the lighthouse to the path of the ship.

View solution

Answer(e) ..... km [3]

© UCLES 2014

9

Layer 1 

Layer 2 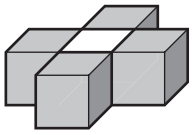

Layer 3 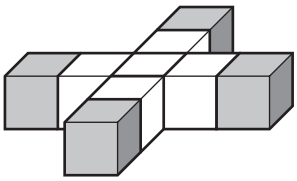

The diagrams show layers of white and grey cubes.
Khadega places these layers on top of each other to make a tower.

(a) Complete the table for towers with 5 and 6 layers.

View solution

Number of layers	1	2	3	4	5	6
Total number of **white** cubes	0	1	6	15		
Total number of **grey** cubes	1	5	9	13		
Total number of cubes	1	6	15	28		

[4]

(b) (i) Find, in terms of n, the **total** number of **grey** cubes in a tower with n layers.

View solution

Answer(b)(i) ..... [2]

(ii) Find the total number of grey cubes in a tower with 60 layers.

View solution

Answer(b)(ii) ..... [1]

(iii) Khadega has plenty of white cubes but only 200 grey cubes.
How many layers are there in the highest tower that she can build?

View solution

Answer(b)(iii) ..... [2]

© UCLES 2014

(c) The expression for the **total** number of **white** cubes in a tower with n layers is $pn^2 + qn + 3$.

View solution

Find the value of p and the value of q.
Show all your working.

Answer(c) p = ...

q = ... [5]

(d) Find an expression, in terms of n, for the **total** number of cubes in a tower with n layers.
Give your answer in its simplest form.

View solution

Answer(d) ..... [2]

© UCLES 2014

10 Kenwyn plays a board game.
Two cubes (dice) each have faces numbered 1, 2, 3, 4, 5 and 6.
In the game, a **throw** is rolling the **two** fair 6-sided dice and then adding the numbers on their top faces.
This total is the number of spaces to move on the board.
For example, if the numbers are 4 and 3, he moves 7 spaces.

(a) Giving each of your answers as a fraction in its simplest form, find the probability that he moves

View solution

(i) two spaces with his next throw,

Answer(a)(i) ..... [2]

(ii) ten spaces with his next throw.

View solution

Answer(a)(ii) ..... [3]

(b) What is the most likely number of spaces that Kenwyn will move with his next throw?
Explain your answer.

View solution

Answer(b) ..... because .....

..... [2]

(c)

View solution

95	96	97	98	99 Go back 3 spaces	100 WIN

To win the game he must move **exactly** to the 100th space.
Kenwyn is on the 97th space.
If his next throw takes him to 99, he has to move back to 96.
If his next throw takes him over 100, he stays on 97.

Find the probability that he reaches 100 in either of his next two throws.

Answer(c) ..... [5]

© UCLES 2014

BLANK PAGE

Permission to reproduce items where third-party owned material protected by copyright is included has been sought and cleared where possible. Every reasonable effort has been made by the publisher (UCLES) to trace copyright holders, but if any items requiring clearance have unwittingly been included the publisher will be pleased to make amends at the earliest possible opportunity.

Cambridge International Examinations is part of the Cambridge Assessment Group. Cambridge Assessment is the brand name of University of Cambridge Local Examinations Syndicate (UCLES), which is itself a department of the University of Cambridge.