Cambridge IGCSE

Cambridge International Examinations
Cambridge International General Certificate of Secondary Education

CANDIDATE NAME	
CENTRE NUMBER	
CANDIDATE NUMBER	

MATHEMATICS **0580/21**

Paper 2 (Extended) **October/November 2015**

1 hour 30 minutes

Candidates answer on the Question Paper.

Additional Materials: Electronic calculator
Tracing paper (optional)
Geometrical instruments

READ THESE INSTRUCTIONS FIRST

Write your Centre number, candidate number and name on all the work you hand in.
Write in dark blue or black pen.
You may use an HB pencil for any diagrams or graphs.
Do not use staples, paper clips, glue or correction fluid.
DO **NOT** WRITE IN ANY BARCODES.

Answer **all** questions.
If working is needed for any question it must be shown below that question.
Electronic calculators should be used.
If the degree of accuracy is not specified in the question, and if the answer is not exact, give the answer to three significant figures. Give answers in degrees to one decimal place.
For π, use either your calculator value or 3.142.

At the end of the examination, fasten all your work securely together.
The number of marks is given in brackets [ ] at the end of each question or part question.
The total of the marks for this paper is 70.

The syllabus is approved for use in England, Wales and Northern Ireland as a Cambridge International Level 1/Level 2 Certificate.

© UCLES 2015

CAMBRIDGE International Examinations

1 At midnight the temperature in Newtown was –8 °C.
At noon the next day the temperature in Newtown was 9 °C.

View solution

Work out the rise in temperature from midnight to noon.

Answer ..... °C [1]

2

View solution

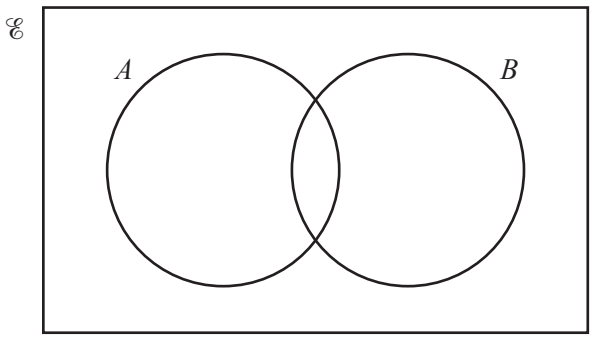

In the Venn diagram shade the region $A \cup B'$. [1]

3

View solution

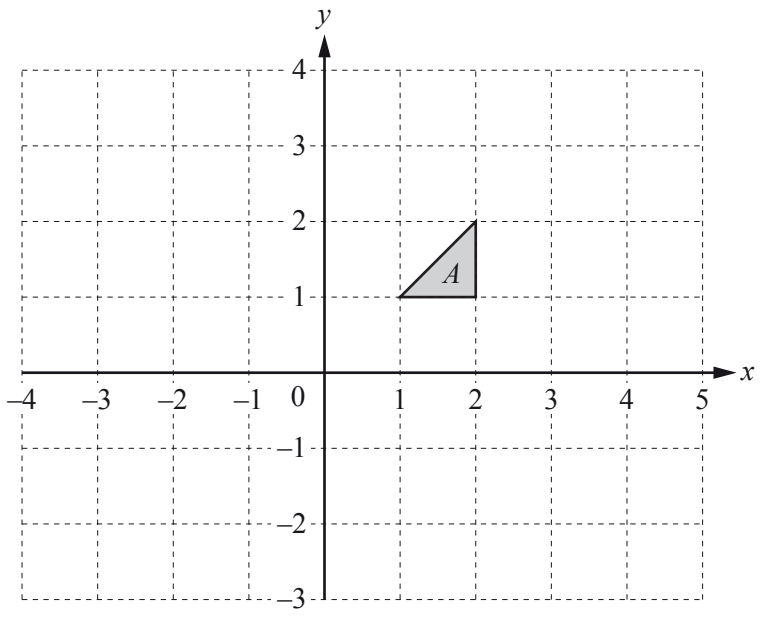

Draw the image of shape A after a translation by the vector $\begin{pmatrix} 2 \\ -3 \end{pmatrix}$. [2]

---

4 Pip and Ali share \$785 in the ratio Pip : Ali = 4 : 1.

Work out Pip's share.

View solution

Answer \$ ..... [2]

---

5 Jim scores the following marks in 8 tests.

View solution

7 8 8 y 6 9 10 5

His mean mark is 7.5 .

Calculate the value of y.

Answer y = ... [2]

---

6 By writing each number correct to 1 significant figure, estimate the value of $\frac{\sqrt{3.9} \times 29.3}{8.9 - 2.7}$.

View solution

Show all your working.

Answer ..... [2]

---

7 Work out the highest common factor (HCF) of 36 and 90.

View solution

Answer ..... [2]

8

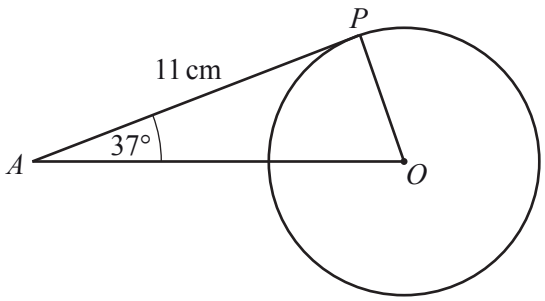

NOT TO SCALE

In the diagram, AP is a tangent to the circle at P.
O is the centre of the circle, angle $PAO = 37°$ and $AP = 11$ cm.

(a) Write down the size of angle OPA.

View solution

Answer(a) Angle OPA = ... [1]

(b) Work out the radius of the circle.

View solution

Answer(b) ..... cm [2]

---

9 Factorise completely.

(a) $ax + ay + 3cx + 3cy$

View solution

Answer(a) ..... [2]

(b) $3a^2 - 12b^2$

View solution

Answer(b) ..... [3]

© UCLES 2015

10 Write the recurring decimal $0.1\dot{5}$ as a fraction.
[$0.1\dot{5}$ means 0.1555...]

View solution

Answer ..... [2]

11

View solution

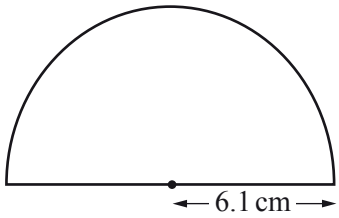

NOT TO SCALE

A protractor is a semi-circle of radius 6.1 cm.

Calculate the **perimeter** of the protractor.

Answer ..... cm [3]

---

12 V is directly proportional to the cube of $(r + 1)$.
When $r = 1$, $V = 24$.

View solution

Work out the value of V when $r = 2$.

Answer $V =$ ..... [3]

© UCLES 2015

13 Make x the subject of the formula.

$$y = ax^2 + b$$

View solution

Answer $x =$ ..... [3]

---

14 A car travels at 56 km/h.

View solution

Find the time it takes to travel 300 metres.
Give your answer in seconds correct to the nearest second.

Answer ..... s [4]

---

15 Simplify. $\dfrac{x^2 - 16}{x^2 - 3x - 4}$

View solution

Answer ..... [4]

© UCLES 2015

16 Hazel invests \$1800 for 7 years at a rate of 1.5% per year compound interest.

View solution

Calculate how much interest she will receive after the 7 years.
Give your answer correct to the nearest dollar.

Answer \$ ..... [4]

17

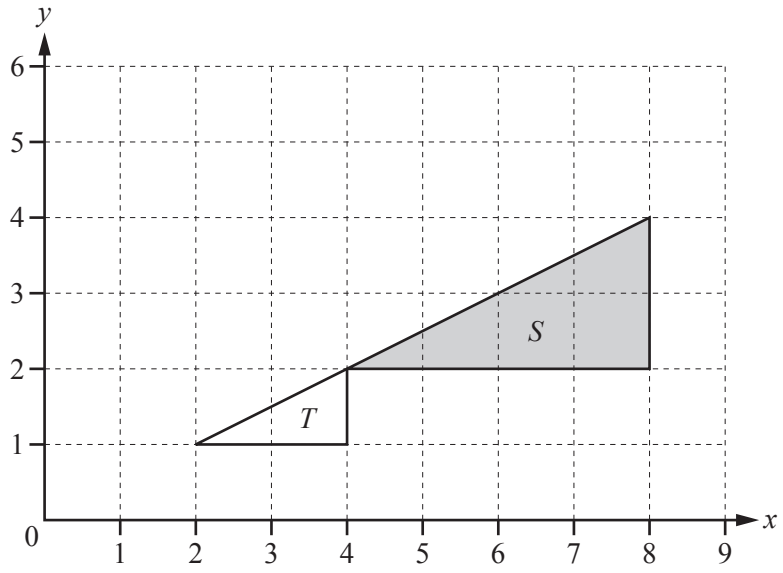

View solution

(a) Describe fully the **single** transformation that maps triangle *S* onto triangle *T*.

Answer(a) .....

..... [3]

View solution

(b) Find the matrix which represents the transformation that maps triangle *S* onto triangle *T*.

Answer(b) $\begin{pmatrix} & \\ & \end{pmatrix}$ [2]

© UCLES 2015

18 **(a)** Work out $\begin{pmatrix} 1 & -2 \\ 3 & 4 \end{pmatrix} \begin{pmatrix} -5 & -3 \\ 2 & 1 \end{pmatrix}$.

View solution

Answer(a) $\begin{pmatrix} & \\ & \end{pmatrix}$ [2]

(b) Find the inverse of $\begin{pmatrix} 1 & -2 \\ 3 & 4 \end{pmatrix}$.

View solution

Answer(b) $\begin{pmatrix} & \\ & \end{pmatrix}$ [2]

(c) Explain why it is not possible to work out $\begin{pmatrix} 1 & -2 \\ 3 & 4 \end{pmatrix} + \begin{pmatrix} 3 \\ 2 \end{pmatrix}$.

View solution

Answer(c) ..... [1]

© UCLES 2015

19

View solution

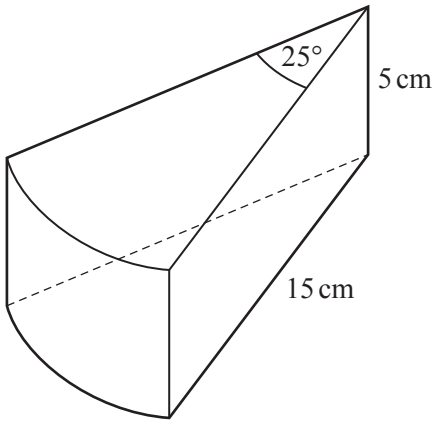

NOT TO SCALE

The diagram shows a wooden prism of height 5 cm.
The cross section of the prism is a sector of a circle with sector angle 25°.
The radius of the sector is 15 cm.

Calculate the **total** surface area of the prism.

Answer ..... cm^2 [5]

© UCLES 2015

20 The table shows the probability that a person has blue, brown or green eyes.

Eye colour	Blue	Brown	Green
Probability	0.4	0.5	0.1

Use the table to work out the probability that two people, chosen at random,

(a) have blue eyes,

View solution

Answer(a) ..... [2]

(b) have different coloured eyes.

View solution

Answer(b) ..... [4]

21 $f(x) = x^3$ $g(x) = 3x - 5$ $h(x) = 2x + 1$

Work out

(a) ff(2),

View solution

Answer(a) ..... [2]

(b) gh(x) and simplify your answer,

View solution

Answer(b) ..... [2]

(c) $h^{-1}(x)$, the inverse of h(x).

View solution

Answer(c) $h^{-1}(x) =$ ..... [2]

BLANK PAGE

Permission to reproduce items where third-party owned material protected by copyright is included has been sought and cleared where possible. Every reasonable effort has been made by the publisher (UCLES) to trace copyright holders, but if any items requiring clearance have unwittingly been included, the publisher will be pleased to make amends at the earliest possible opportunity.

To avoid the issue of disclosure of answer-related information to candidates, all copyright acknowledgements are reproduced online in the Cambridge International Examinations Copyright Acknowledgements Booklet. This is produced for each series of examinations and is freely available to download at www.cie.org.uk after the live examination series.

Cambridge International Examinations is part of the Cambridge Assessment Group. Cambridge Assessment is the brand name of University of Cambridge Local Examinations Syndicate (UCLES), which is itself a department of the University of Cambridge.