Cambridge IGCSE

Cambridge International Examinations
Cambridge International General Certificate of Secondary Education

CANDIDATE NAME									
CENTRE NUMBER						CANDIDATE NUMBER				

MATHEMATICS **0580/31**

Paper 3 (Core) **October/November 2016**

2 hours

Candidates answer on the Question Paper.

Additional Materials: Electronic calculator
Tracing paper (optional)
Geometrical instruments

READ THESE INSTRUCTIONS FIRST

Write your Centre number, candidate number and name on all the work you hand in.
Write in dark blue or black pen.
You may use an HB pencil for any diagrams or graphs.
Do not use staples, paper clips, glue or correction fluid.
DO **NOT** WRITE IN ANY BARCODES.

Answer **all** questions.
If working is needed for any question it must be shown below that question.
Electronic calculators should be used.
If the degree of accuracy is not specified in the question, and if the answer is not exact, give the answer to three significant figures. Give answers in degrees to one decimal place.
For π, use either your calculator value or 3.142.

At the end of the examination, fasten all your work securely together.
The number of marks is given in brackets [ ] at the end of each question or part question.
The total of the marks for this paper is 104.

The syllabus is approved for use in England, Wales and Northern Ireland as a Cambridge International Level 1/Level 2 Certificate.

This document consists of **15** printed pages and **1** blank page.

© UCLES 2016

CAMBRIDGE International Examinations

1 **(a)** Juan and his family fly from London to Rio de Janeiro.

View solution

(i) The plane departs at 10 20 and arrives in Rio de Janeiro 11 hours 40 minutes later.
The local time in Rio de Janeiro is 5 hours behind the local time in London.

Work out the time in Rio de Janeiro when the plane arrives.

..... [2]

(ii) The total cost of the plane tickets is 3500 pounds (£).
The exchange rate is £1 = 4.45 Brazilian Real.

View solution

Calculate the cost of the tickets in Brazilian Real.

..... Real [1]

(b) **(i)** Juan and his family go to a soccer match.
He buys 2 adult tickets and 2 child tickets.
The price of an adult ticket is 660 Brazilian Real.
The price of a child ticket is $\frac{2}{3}$ of the price of an adult ticket.

View solution

Calculate the total cost of the tickets.

..... Real [2]

(ii) The length, x metres, of the soccer pitch is 105 m, correct to the nearest metre.

View solution

Complete the statement about the value of x.

..... $\leqslant x <$ ..... [2]

© UCLES 2016

(c) The table shows how Juan and his family spent their time in Rio de Janeiro.

View solution

Activity	Percentage of time	Sector angle in a pie chart
Watching soccer	10	36°
Sleeping		108°
Shopping		
Beach	25	90°
Other	15	54°

(i) Complete the table. [3]

(ii) Complete the pie chart.

View solution

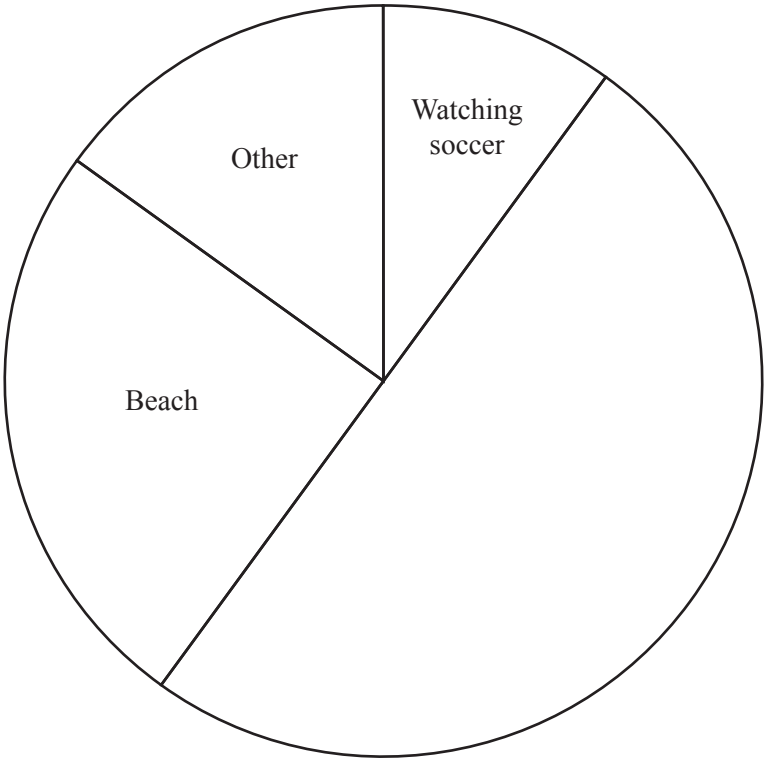

[1]

2 Javier went to a carnival with his friends.

(a) He played five games of darts.
These are his scores.

View solution

160 58 45 82 125

(i) Work out his mean score.

..... [2]

(ii) Find the range.

View solution

..... [1]

(b) The 5000 tickets for the carnival are different colours.
The table shows the number of tickets of each colour.

View solution

Colour of ticket	Red	Green	Blue	Pink	White
Number of tickets	370	560	1800	1320	950

A ticket is picked at random.

Find the probability that this ticket is Blue.

..... [1]

(c) Five different types of food are sold at the carnival.
Javier chooses one of these types of food.
The table shows the probability that he chooses each type of food.

View solution

Type of food	Curry	Fries	Pasta	Burger	Salad
Probability	0.15	0.23	0.4		0.07

Complete the table. [2]

(d) Javier hires a four-seater bike.
The hire cost is \$8.50 for the first hour and then \$7.75 for each extra hour.

View solution

Calculate the cost of hiring the bike for 5 hours.

\$..... [2]

© UCLES 2016

(e) The table shows the number of drinks sold by one stall at the carnival.

View solution

Drink	Number sold
Tea	70
Orange	60
Water	120
Coffee	180
Smoothie	40

Draw a bar chart to show this information.
Complete the scale on the frequency axis.

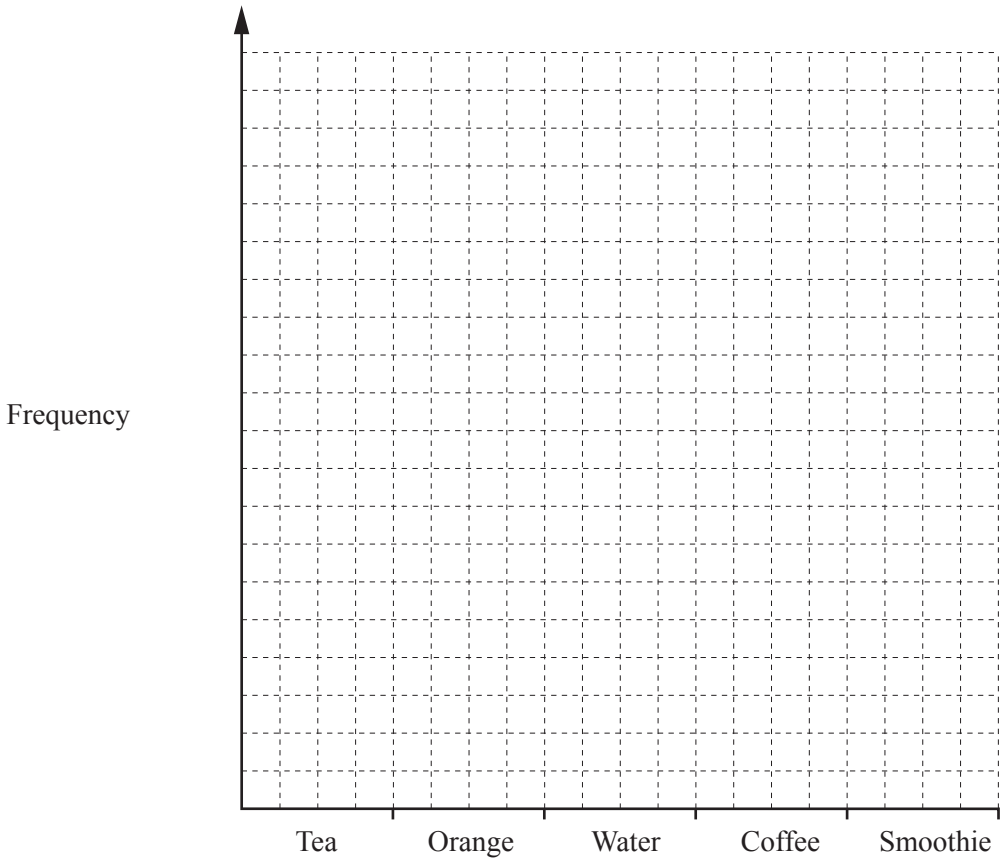

[3]

3 **(a)**

6 144 63 11 288 72 8

View solution

From the list, write down

(i) the multiple of 7,

..... [1]

(ii) the cube of 2,

View solution

..... [1]

(iii) the prime number,

View solution

..... [1]

(iv) the lowest common multiple (LCM) of 16 and 18.

View solution

..... [1]

(b) Without using a calculator explain why the square of 4.86 must be between 16 and 25.

View solution

..... [1]

(c) Find the value of

View solution

(i) 4^7,

..... [1]

(ii) 12^0,

View solution

..... [1]

(iii) $8.3^2 + \sqrt{27}$.

View solution

..... [1]

(d) Write 90 as the product of its prime factors.

View solution

..... [2]

© UCLES 2016

4

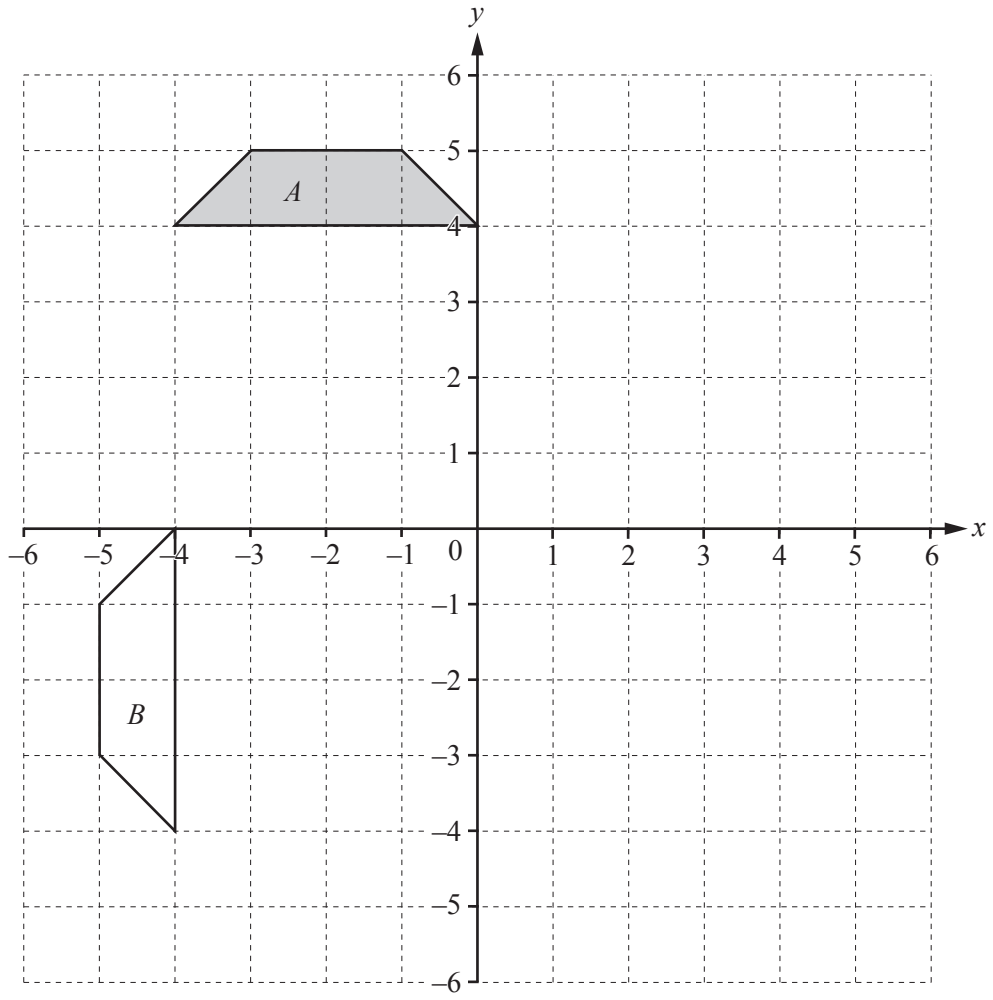

The diagram shows two trapeziums, A and B, on a 1 cm^2 grid.

(a) Find the area of trapezium A.
Give the units of your answer.

View solution

.... [2]

(b) **(i)** Describe fully the **single** transformation that maps trapezium A onto trapezium B.

View solution

.....

..... [3]

(ii) On the grid, translate trapezium A by the vector $\begin{pmatrix} 5 \\ -2 \end{pmatrix}$. [2]

(iii) On the grid, enlarge trapezium A with centre (0, 0) and scale factor 0.5 . [2]

© UCLES 2016

5 **(a)** This graph shows Gianna's journey to work.

View solution

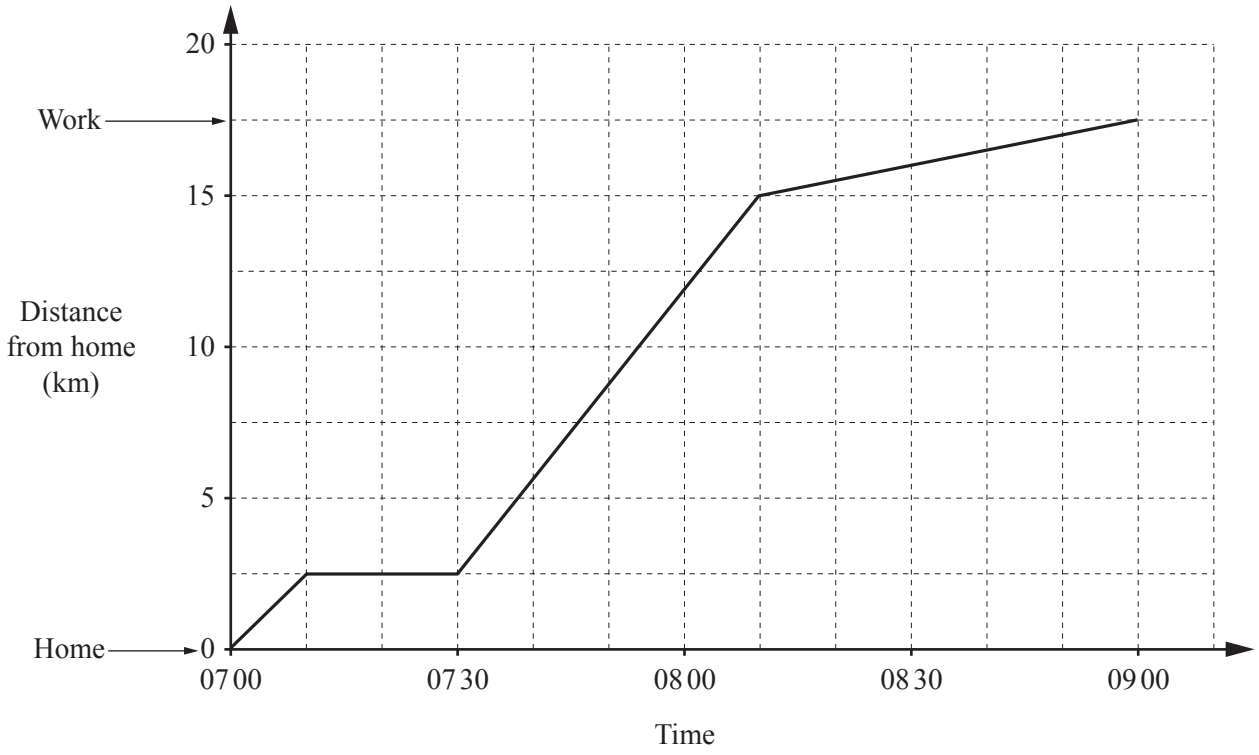

(i) How far did Gianna travel to work?

..... km [1]

(ii) Explain what happened at 07 10.

View solution

..... [1]

(iii) Calculate the average speed for Gianna's journey to work.

View solution

..... km/h [2]

(b) Gianna earns $1320 each month.
She divides her money in the ratio Bills : Leisure : Other = 12 : 5 : 7.

View solution

Work out how much she spends on each.

Bills = $.....

Leisure = $.....

Other = $..... [3]

(c) Gianna invests \$5000 for 3 years at a rate of 2.1% per year compound interest.

View solution

Calculate the amount she will have at the end of the 3 years.
Give your answer correct to 2 decimal places.

\$..... [4]

© UCLES 2016

6 **(a)** Here are the first four terms of a sequence.

View solution

18 25 32 39

(i) Write down the next term.

..... [1]

(ii) Explain how you worked out your answer.

View solution

..... [1]

(b) The nth term of another sequence is $n^2 + 3$.

View solution

Write down the first three terms of this sequence.

..... , ... , ... [2]

(c) Simplify.

View solution

(i) $6a + 5h - 4a - 8h$

..... [2]

(ii) $5(x + 3) + 4(2x - 6)$

View solution

..... [2]

(d) Factorise.

View solution

$6g + 15$

..... [1]

(e) A rectangle has length $(x + 6)$ cm and width 5 cm.
The area of this rectangle is 85 cm^2.

View solution

Find the value of x.

$x =$ ..... [3]

© UCLES 2016

7

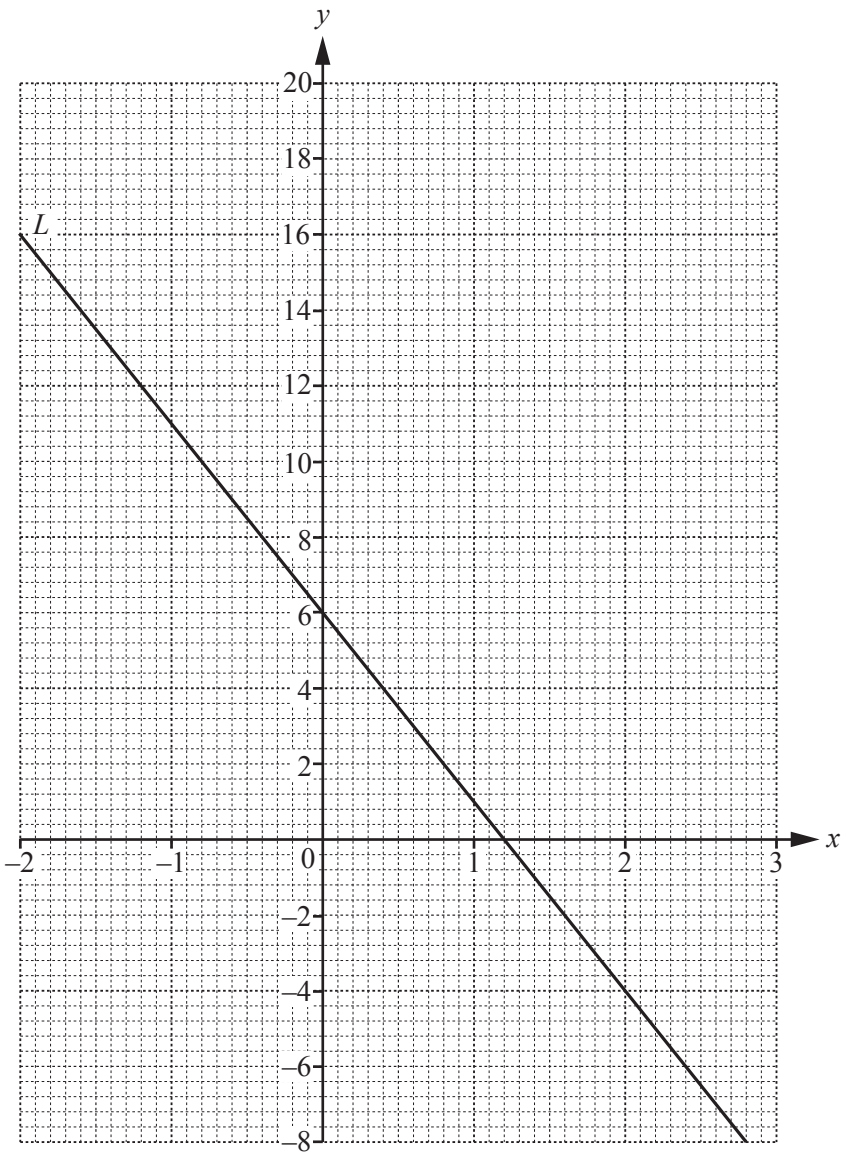

(a) The line L is drawn on the grid.

Find the equation of the line in the form $y = mx + c$.

View solution

$y =$ ..... [3]

(b) **(i)** Complete the table of values for $y = x^2 + 2x + 4$.

View solution

x	−2	−1	0	1	2	3
y	4		4	7		19

[2]

(ii) On the grid above, draw the graph of $y = x^2 + 2x + 4$ for $-2 \leqslant x \leqslant 3$. [4]

(c) For $-2 \leqslant x \leqslant 3$, write down the x co-ordinate of the point of intersection of the curve $y = x^2 + 2x + 4$ with the line L.

View solution

$x =$ ..... [1]

© UCLES 2016

8 **(a)** A cuboid measures 6 cm by 3 cm by 2 cm.

View solution

(i) On this 1 cm^2 grid, complete the net of the cuboid.

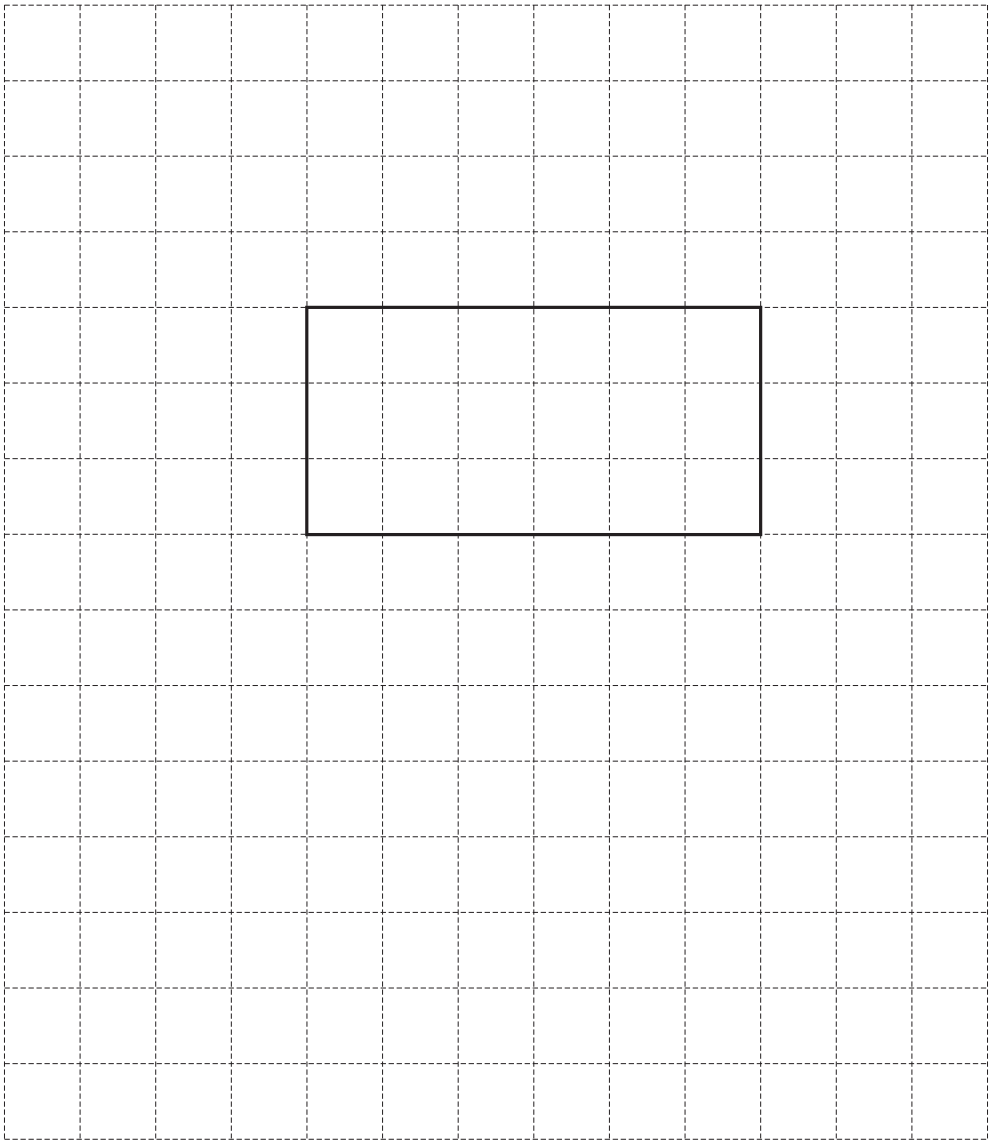

[3]

(ii) Calculate the volume of the cuboid.

View solution

..... cm^3 [2]

(b)

View solution

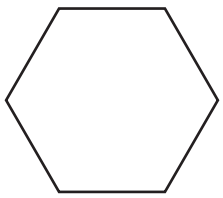

Write down the mathematical name of this shape.

..... [1]

© UCLES 2016

(c)



View solution

Mark an obtuse angle on this trapezium. [1]

(d) A regular polygon has an exterior angle of 22.5°.

View solution

Work out how many sides this polygon has.

..... [2]

(e)

View solution

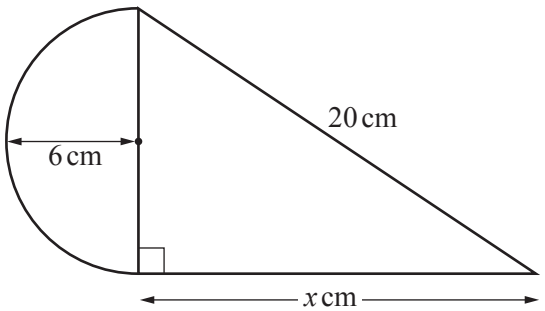

The diagram shows a shape made from a semi-circle, radius 6 cm, and a right-angled triangle.

(i) Show that $x = 16$.

[2]

(ii) Calculate the area of the shape.

View solution

..... cm^2 [5]

9 **(a)** The area of Cuba, in square kilometres, is one hundred and five thousand eight hundred and six.

Write this number in figures.

View solution

..... [1]

(b) The population of an island is 103 000.

Write this number in standard form.

View solution

..... [1]

(c) The table shows some populations in 2014.

View solution

	Population
Puerto Rico	3.68×10^6
St Maarten	4.61×10^4
Haiti	1.05×10^7
US Virgin Islands	1.07×10^5

(i) Write the population of St Maarten as an ordinary number.

..... [1]

(ii) Complete the statement.

View solution

The population of Haiti is approximately ..... times the population of the US Virgin Islands. [1]

(iii) Find the difference between the population of Haiti and the population of Puerto Rico. Give your answer in standard form.

View solution

..... [2]

(d) In 2013 the population of a town was 30 405.
In 2014 the population was 30 851.

View solution

Calculate the percentage increase in the population.

.....% [3]

© UCLES 2016

10 The scale drawing shows the positions of two towns, *X* and *Y*.
The scale is 1 centimetre represents 5 kilometres.

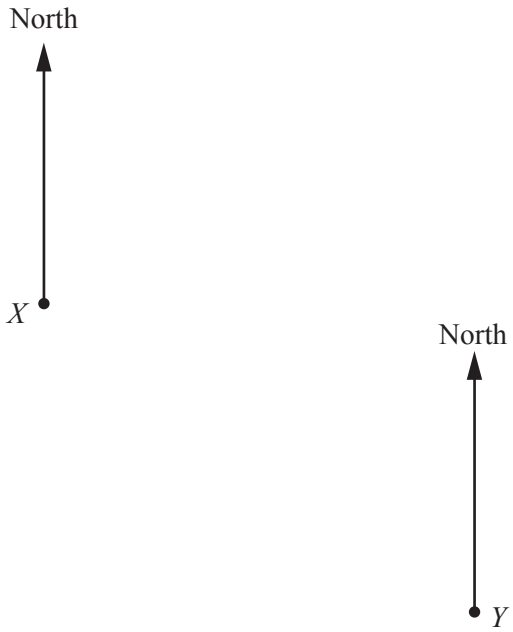

Scale: 1 cm to 5 km

(a) Work out the actual distance from town *X* to town *Y*.

View solution

..... km [2]

(b) Measure the bearing of town *X* from town *Y*.

View solution

..... [1]

(c) An airport, *A*, is 22.5 km from town *Y* on a bearing of 050°.

Mark and label the position of *A* on the scale drawing. [2]

View solution

BLANK PAGE

Permission to reproduce items where third-party owned material protected by copyright is included has been sought and cleared where possible. Every reasonable effort has been made by the publisher (UCLES) to trace copyright holders, but if any items requiring clearance have unwittingly been included, the publisher will be pleased to make amends at the earliest possible opportunity.

To avoid the issue of disclosure of answer-related information to candidates, all copyright acknowledgements are reproduced online in the Cambridge International Examinations Copyright Acknowledgements Booklet. This is produced for each series of examinations and is freely available to download at www.cie.org.uk after the live examination series.

Cambridge International Examinations is part of the Cambridge Assessment Group. Cambridge Assessment is the brand name of University of Cambridge Local Examinations Syndicate (UCLES), which is itself a department of the University of Cambridge.

© UCLES 2016