Cambridge IGCSE

Cambridge International Examinations
Cambridge International General Certificate of Secondary Education

CANDIDATE NAME									
CENTRE NUMBER						CANDIDATE NUMBER				

MATHEMATICS **0580/42**

Paper 4 (Extended) **October/November 2017**

2 hours 30 minutes

Candidates answer on the Question Paper.

Additional Materials: Electronic calculator
Tracing paper (optional)
Geometrical instruments

READ THESE INSTRUCTIONS FIRST

Write your Centre number, candidate number and name on all the work you hand in.
Write in dark blue or black pen.
You may use an HB pencil for any diagrams or graphs.
Do not use staples, paper clips, glue or correction fluid.
DO **NOT** WRITE IN ANY BARCODES.

Answer **all** questions.
If working is needed for any question it must be shown below that question.
Electronic calculators should be used.
If the degree of accuracy is not specified in the question, and if the answer is not exact, give the answer to three significant figures. Give answers in degrees to one decimal place.
For π, use either your calculator value or 3.142.

At the end of the examination, fasten all your work securely together.
The number of marks is given in brackets [ ] at the end of each question or part question.
The total of the marks for this paper is 130.

This document consists of **20** printed pages.

© UCLES 2017

1 **(a)** Alex has \$20 and Bobbie has \$25.

View solution

(i) Write down the ratio Alex's money : Bobbie's money in its simplest form.

..... : ..... [1]

View solution

(ii) Alex and Bobbie each spend $\frac{1}{5}$ of their money.

Find the ratio Alex's remaining money : Bobbie's remaining money in its simplest form.

..... : ..... [1]

(iii) Alex and Bobbie **then** each spend \$4.

Find the new ratio Alex's remaining money : Bobbie's remaining money in its simplest form.

View solution

..... : ..... [2]

(b) **(i)** The population of a town in the year 1990 was 15 600.
The population is now 11 420.

View solution

Calculate the percentage decrease in the population.

.....% [3]

(ii) The population of 15 600 was 2.5% less than the population in the year 1980.

View solution

Calculate the population in the year 1980.

..... [3]

© UCLES 2017

(c) Chris invests \$200 at a rate of x% per year simple interest.
At the end of 15 years the total interest received is \$48.

View solution

Find the value of x.

$x =$ ..... [2]

(d) Dani invests \$200 at a rate of y% per year compound interest.
At the end of 10 years the value of her investment is \$256.

View solution

Calculate the value of y, correct to 1 decimal place.

$y =$ ..... [3]

2 (a)

View solution

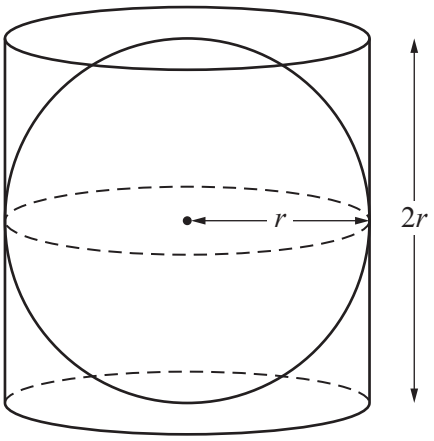

NOT TO SCALE

A sphere of radius r is inside a closed cylinder of radius r and height $2r$.

[The volume, V, of a sphere with radius r is $V = \frac{4}{3}\pi r^3$.]

(i) When $r = 8$ cm, calculate the volume inside the cylinder which is **not** occupied by the sphere.

..... cm^3 [3]

(ii) Find r when the volume inside the cylinder **not** occupied by the sphere is $36\,cm^3$.

View solution

$r =$ ..... cm [3]

© UCLES 2017

(b)

View solution

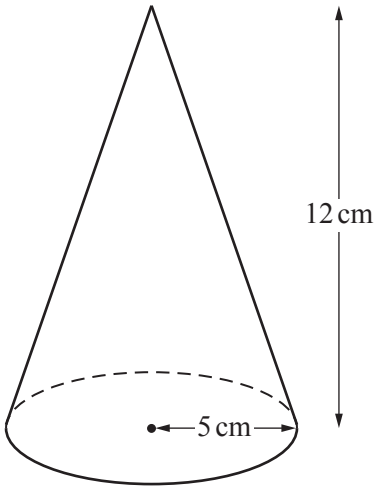

NOT TO SCALE

The diagram shows a solid cone with radius 5 cm and perpendicular height 12 cm.

(i) The **total** surface area is painted at a cost of \$0.015 per cm^2.

Calculate the cost of painting the cone.

[The curved surface area, A, of a cone with radius r and slant height l is $A = \pi rl$.]

\$ ..... [4]

(ii) The cone is made of metal and is melted down and made into smaller solid cones with radius 1.25 cm and perpendicular height 3 cm.

View solution

Calculate the number of smaller cones that can be made.

..... [3]

© UCLES 2017

3

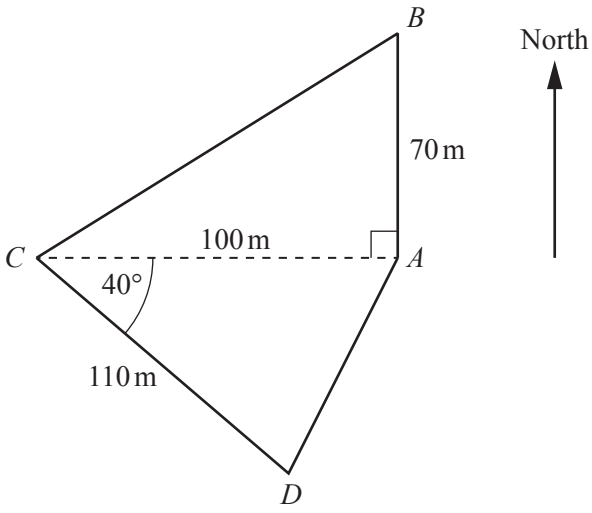

The diagram shows a field *ABCD*.

(a) Calculate the area of the field *ABCD*.

View solution

.....m^2 [3]

(b) Calculate the perimeter of the field *ABCD*.

View solution

..... m [5]

(c) Calculate the shortest distance from A to CD.

View solution

..... m [2]

(d) B is due north of A.

View solution

Find the bearing of C from B.

..... [3]

4 (a)

View solution

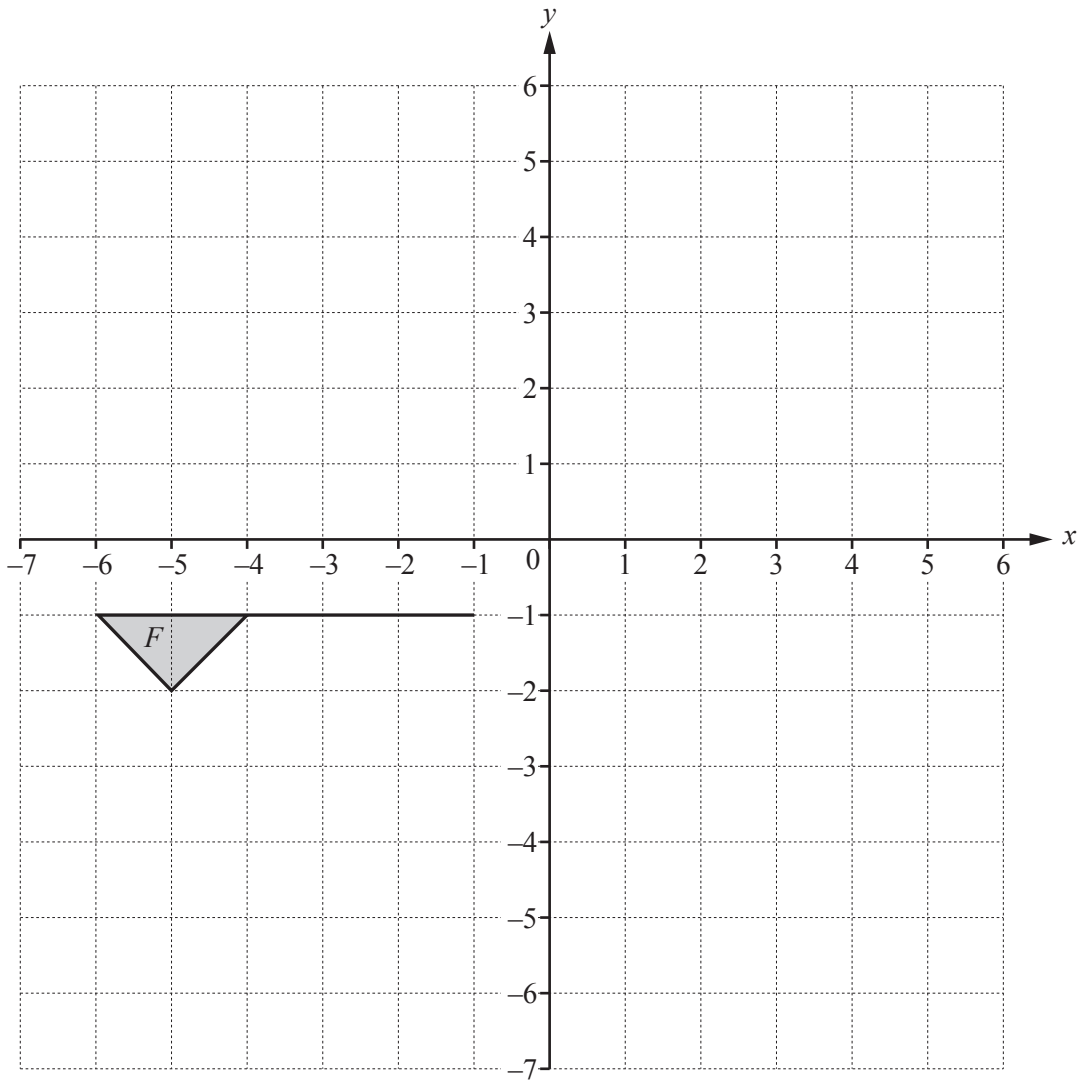

Draw the image of

(i) flag F after translation by the vector $\begin{pmatrix} 6 \\ -2 \end{pmatrix}$, [2]

(ii) flag F after rotation through 180° about (– 2, 0), [2]

(iii) flag F after reflection in the line $y = x$. [2]

© UCLES 2017

(b)

View solution

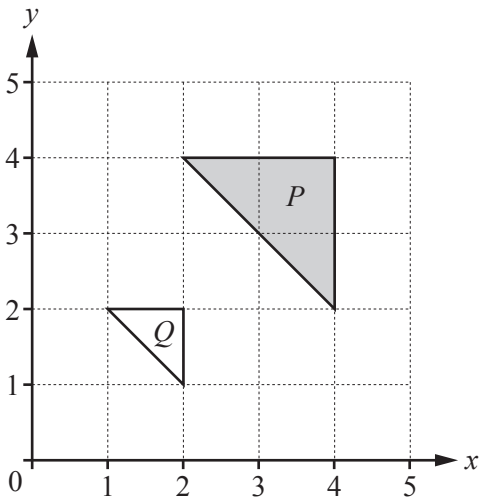

(i) Describe fully the **single** transformation that maps triangle P onto triangle Q.

.....

..... [3]

(ii) Find the matrix that represents this transformation.

View solution

$\begin{pmatrix} & \\ & \end{pmatrix}$ [2]

(c) The point A is translated to the point B by the vector $\begin{pmatrix} 4u \\ 3u \end{pmatrix}$.

View solution

$|\overrightarrow{AB}| = 12.5$

Find u.

$u =$ ..... [3]

5 $y = \frac{x^3}{8} - \frac{2}{x^2}$, $x \neq 0$

(a) Complete the table of values.

View solution

x	0.5	1	1.5	2	2.5	3	3.5
y	−8.0	−1.9	−0.5	0.5	1.6		

[2]

(b)

View solution

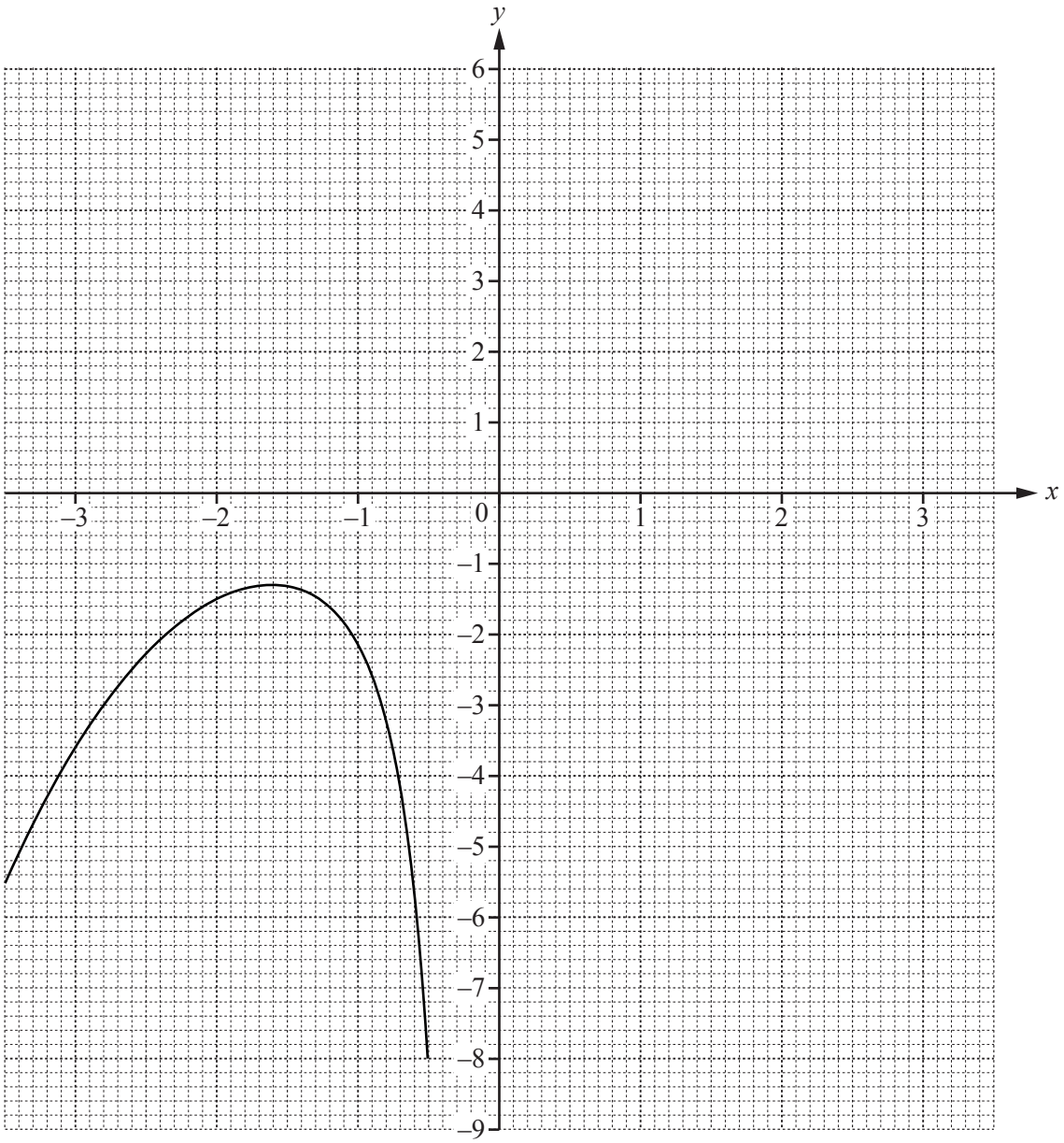

The graph of $y = \frac{x^3}{8} - \frac{2}{x^2}$ for $-3.5 \leqslant x \leqslant -0.5$ has already been drawn.

On the grid, draw the graph of $y = \frac{x^3}{8} - \frac{2}{x^2}$ for $0.5 \leqslant x \leqslant 3.5$. [4]

© UCLES 2017

(c) Use your graph to solve the equation $\frac{x^3}{8} - \frac{2}{x^2} = 0$.

View solution

$x =$ ..... [1]

(d) $\frac{x^3}{8} - \frac{2}{x^2} = k$ and k is an integer.

View solution

Write down a value of k when the equation $\frac{x^3}{8} - \frac{2}{x^2} = k$ has

(i) one answer, $k =$ ..... [1]

(ii) three answers. $k =$ ..... [1]

(e) By drawing a suitable tangent, estimate the gradient of the curve where $x = -3$.

View solution

..... [3]

(f) **(i)** By drawing a suitable line on the grid, find x when $\frac{x^3}{8} - \frac{2}{x^2} = 6 - x$.

View solution

$x =$ ..... [3]

(ii) The equation $\frac{x^3}{8} - \frac{2}{x^2} = 6 - x$ can be written as $x^5 + ax^3 + bx^2 + c = 0$.

View solution

Find the values of a, b and c.

$a =$ .....

$b =$ .....

$c =$ ..... [4]

© UCLES 2017

6 **(a)** There are 100 students in group *A*.
The teacher records the distance, *d* metres, each student runs in one minute.
The results are shown in the cumulative frequency diagram.

View solution

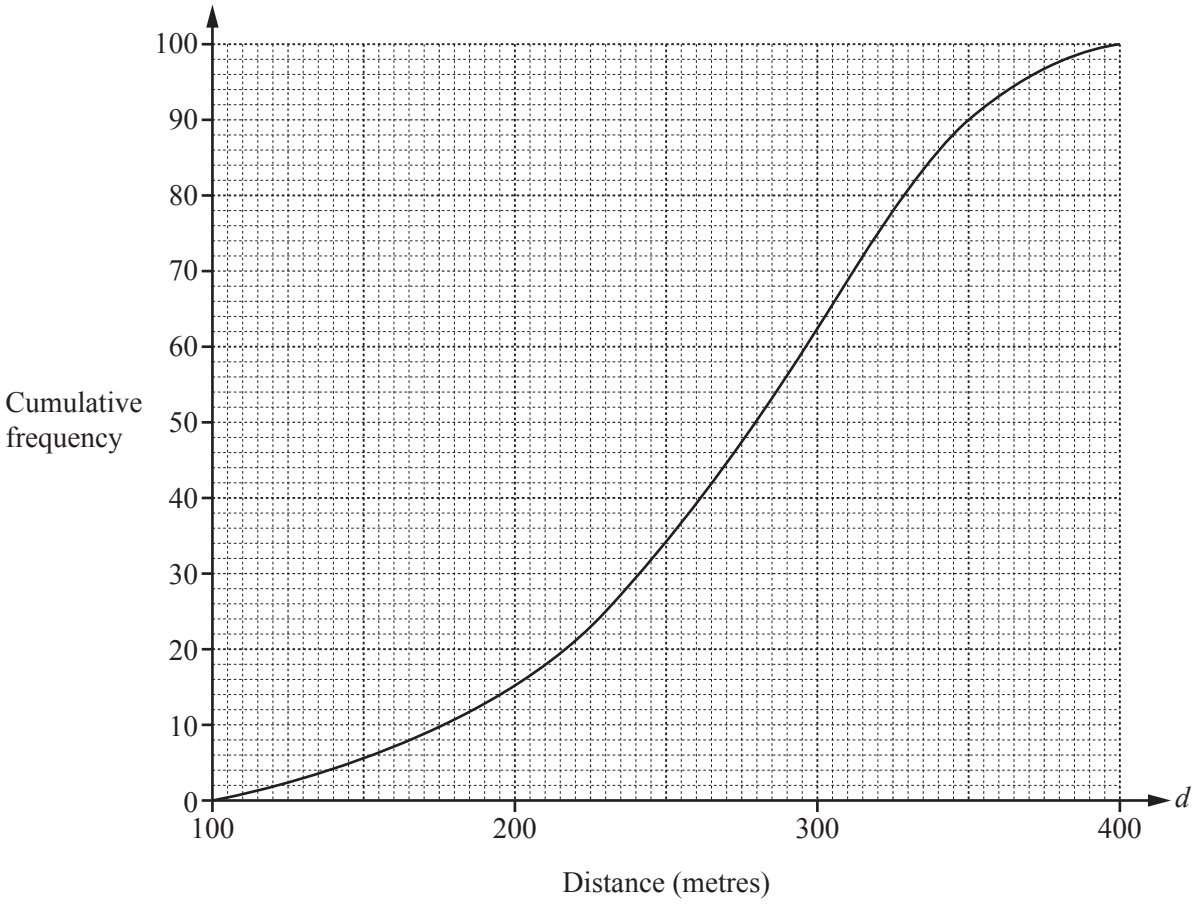

Find

(i) the median,

..... m [1]

(ii) the upper quartile,

View solution

..... m [1]

(iii) the inter-quartile range,

View solution

..... m [1]

(iv) the number of students who run more than 350 m.

View solution

..... [2]

(b) There are 100 students in group *B*.
The teacher records the distance, *d* metres, each of these students runs in one minute.
The results are shown in the frequency table.

View solution

Distance (*d* metres)	$100 < d \leqslant 200$	$200 < d \leqslant 250$	$250 < d \leqslant 280$	$280 < d \leqslant 320$	$320 < d \leqslant 400$
Number of students	20	22	30	16	12

(i) Calculate an estimate of the mean distance for group *B*.

..... m [4]

(ii) Complete the histogram to show the information in the frequency table.

View solution

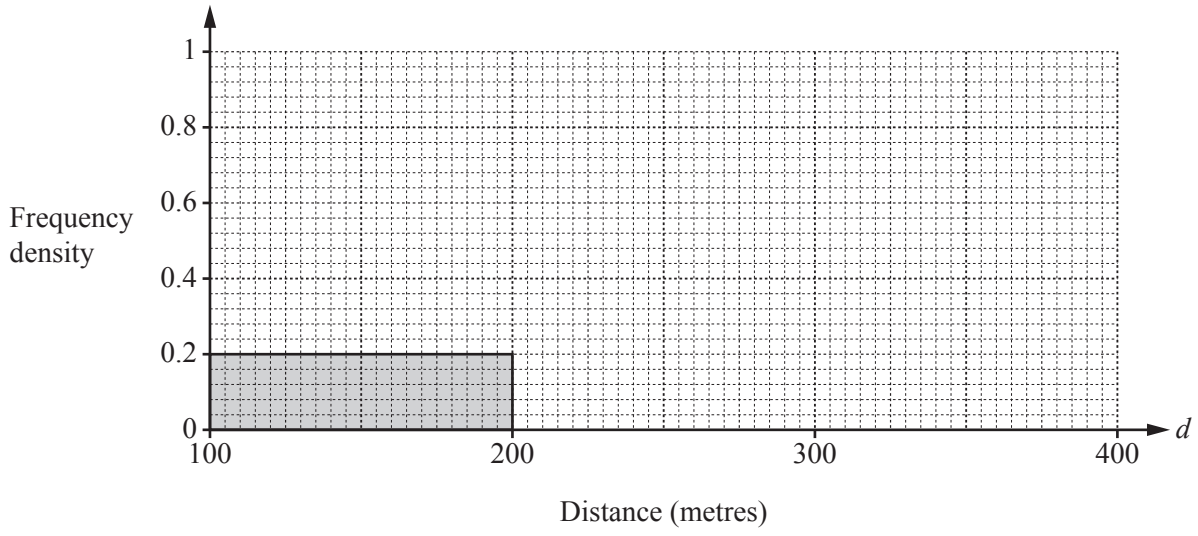

[4]

(c) For the 100 students in group *B*, the median is 258 m.

View solution

Complete the statement.

On average, the students in group *A* run ..... than the students in group *B*. [1]

7

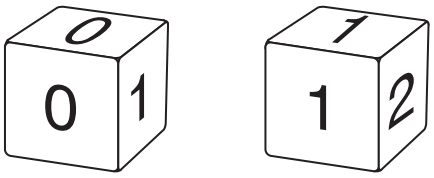

A *B*

The diagram shows two fair dice.
The numbers on dice *A* are 0, 0, 1, 1, 1, 3.
The numbers on dice *B* are 1, 1, 2, 2, 2, 3.
When a dice is rolled, the score is the number on the top face.

(a) Dice *A* is rolled once.

View solution

Find the probability that the score is not 3.

..... [1]

(b) Dice *A* is rolled twice.

View solution

Find the probability that the score is 0 both times.

..... [2]

(c) Dice *A* is rolled 60 times.

View solution

Calculate an estimate of the number of times the score is 0.

..... [1]

(d) Dice *A* and dice *B* are each rolled once.
The product of the scores is recorded.

View solution

(i) Complete the possibility diagram.

Dice *B* \ Dice *A*	0	0	1	1	1	3
3	0	0				
2	0	0				
2	0	0				
2	0	0				
1	0	0				
1	0	0	1	1	1	3

[2]

(ii) Find the probability that the product of the scores is

View solution

(a) 2,

..... [1]

(b) greater than 3.

..... [1]

(e) Eva keeps rolling dice *B* until 1 is scored.

View solution

Find the probability that this happens on the 5th roll.

..... [2]

© UCLES 2017

8 **(a)** The cost of 1 apple is a cents.
The cost of 1 pear is p cents.
The total cost of 7 apples and 9 pears is 354 cents.

View solution

(i) Write down an equation in terms of a and p.

..... [1]

(ii) The cost of 1 pear is 2 cents more than the cost of 1 apple.

View solution

Find the value of a and the value of p.

$a =$ .....

$p =$ ..... [3]

(b) Rowena walks 2 km at an average speed of x km/h.

View solution

(i) Write down an expression, in terms of x, for the time taken.

..... h [1]

(ii) Rowena then walks 3 km at an average speed of $(x - 1)$ km/h.
The total time taken to walk the 5 km is 2 hours.

View solution

(a) Show that $2x^2 - 7x + 2 = 0$.

[3]

© UCLES 2017

(b) Find the value of x.
Show all your working and give your answer correct to 2 decimal places.

View solution

$x =$ ..... [4]

9 $f(x) = 1 - 2x$ $g(x) = x + 4$ $h(x) = x^2 + 1$

(a) Find $f(-1)$.

View solution

..... [1]

(b) Solve the equation.

$$2f(x) = g(x)$$

View solution

$x =$ ..... [2]

(c) Find $fg(x)$.
Give your answer in its simplest form.

View solution

..... [2]

(d) Find hh(2).

View solution

..... [2]

(e) Find $f^{-1}(x)$.

View solution

$f^{-1}(x) =$ ..... [2]

© UCLES 2017

(f) $\text{hgf}(x) = 4x^2 + px + q$

View solution

Find the value of p and the value of q.

$p =$ .....

$q =$ ..... [4]

Question 10 is printed on the next page.

10

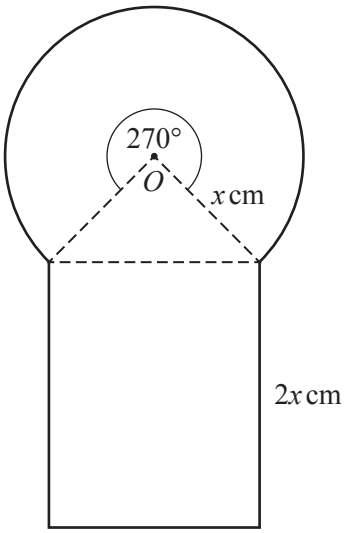

NOT TO SCALE

The diagram shows a sector of a circle, a triangle and a rectangle.
The sector has centre O, radius x cm and angle 270°.
The rectangle has length $2x$ cm.

The total area of the shape is kx^2 cm^2.

(a) Find the value of k.

View solution

$k =$ ..... [5]

(b) Find the value of x when the total area is 110 cm^2.

View solution

$x =$ ..... [2]

Permission to reproduce items where third-party owned material protected by copyright is included has been sought and cleared where possible. Every reasonable effort has been made by the publisher (UCLES) to trace copyright holders, but if any items requiring clearance have unwittingly been included, the publisher will be pleased to make amends at the earliest possible opportunity.

To avoid the issue of disclosure of answer-related information to candidates, all copyright acknowledgements are reproduced online in the Cambridge International Examinations Copyright Acknowledgements Booklet. This is produced for each series of examinations and is freely available to download at www.cie.org.uk after the live examination series.

Cambridge International Examinations is part of the Cambridge Assessment Group. Cambridge Assessment is the brand name of University of Cambridge Local Examinations Syndicate (UCLES), which is itself a department of the University of Cambridge.

© UCLES 2017