Cambridge IGCSE

Cambridge International Examinations
Cambridge International General Certificate of Secondary Education

CANDIDATE NAME									
CENTRE NUMBER						CANDIDATE NUMBER				

MATHEMATICS **0580/31**

Paper 3 (Core) **October/November 2018**

2 hours

Candidates answer on the Question Paper.

Additional Materials: Electronic calculator
Tracing paper (optional)
Geometrical instruments

READ THESE INSTRUCTIONS FIRST

Write your Centre number, candidate number and name on all the work you hand in.
Write in dark blue or black pen.
You may use an HB pencil for any diagrams or graphs.
Do not use staples, paper clips, glue or correction fluid.
DO **NOT** WRITE IN ANY BARCODES.

Answer **all** questions.
If working is needed for any question it must be shown below that question.
Electronic calculators should be used.
If the degree of accuracy is not specified in the question, and if the answer is not exact, give the answer to three significant figures. Give answers in degrees to one decimal place.
For π, use either your calculator value or 3.142.

At the end of the examination, fasten all your work securely together.
The number of marks is given in brackets [ ] at the end of each question or part question.
The total of the marks for this paper is 104.

This document consists of **16** printed pages.

© UCLES 2018

CAMBRIDGE International Examinations

1 Lena owns a café.

View solution

(a) One day, Lena records the drinks she sells in one hour.

Tea	Tea	Coffee	Juice	Milkshake	Milkshake	Coffee	Coffee
Milkshake	Coffee	Tea	Juice	Tea	Coffee	Tea	Juice
Milkshake	Tea	Milkshake	Tea	Coffee	Tea	Milkshake	Coffee

(i) Complete the frequency table.
You may use the tally column to help you.

Drink	Tally	Frequency
Coffee		
Juice		
Milkshake		
Tea		
	Total	24

[2]

View solution

(ii) Draw a bar chart to show this information.
Complete the scale on the frequency axis.

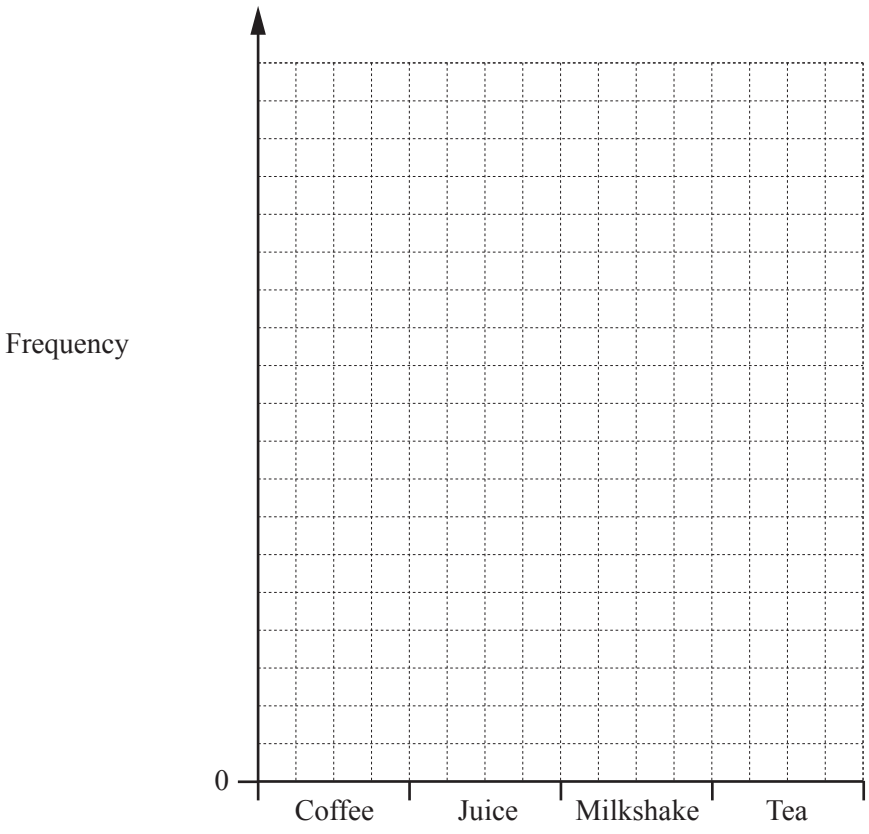

[3]

© UCLES 2018

(b) This table shows the opening hours of the café.

View solution

Day	Opening hours
Monday to Thursday	08 30 to 17 00
Friday and Saturday	08 30 to 19 00
Sunday	09 00 to 18 00

(i) Work out the total number of hours the café is open in one week.

..... hours [2]

(ii) Lena is in the café for 40 hours each week.
Ron is in the café when Lena is not there.

View solution

Calculate the percentage of the total opening hours that Ron is in the café each week.

.....% [2]

(c) Saddak buys 3 cups of tea and 2 cookies for $6.95 .
A cup of tea costs $1.75 .

View solution

Work out the cost of one cookie.

$ ..... [2]

(d) The price of a cake is $2.60 .
At the end of the day, Lena reduces the price of each cake by 35%.

View solution

Calculate the reduced price of a cake.

$ ..... [2]

© UCLES 2018

2 **(a)** Write down all the factors of 18.

View solution

..... [2]

(b) Write down a prime number between 40 and 50.

View solution

..... [1]

(c) Calculate $1.09 + \frac{7.85}{6.21 - 4.37}$.

Give your answer correct to 1 decimal place.

View solution

..... [2]

(d) Find the value of

(i) $\sqrt{2.89}$,

View solution

..... [1]

(ii) 14^3,

View solution

..... [1]

(iii) 4^{-2}.

View solution

..... [1]

© UCLES 2018

(e) (i) $126 = 2 \times 3^2 \times k$

View solution

Find the value of k.

$k =$ ..... [1]

(ii) Write 90 as the product of its prime factors.

View solution

..... [2]

(iii) Find the lowest common multiple (LCM) of 90 and 126.

View solution

..... [2]

© UCLES 2018

3 **(a)** The table gives some information about the numbers of visitors at a leisure centre one day.

View solution

	Adult	Child	Total
Male		144	240
Female	129		260
Total	225	275	500

(i) Complete the table. [1]

(ii) Work out how many more child visitors than adult visitors there are.

View solution

..... [1]

(iii) Write down the fraction of visitors that are adults.
Give your answer in its lowest terms.

View solution

..... [2]

(iv) Write the ratio number of males : number of females.
Give your answer in its simplest form.

View solution

..... : ..... [2]

(v) One of these visitors is selected at random.

Find the probability that this visitor is a male child.

View solution

..... [1]

© UCLES 2018

(b) The number of people in each of 150 cars entering the leisure centre car park is recorded. The table shows the results.

View solution

Number of people	1	2	3	4	5
Frequency	44	43	30	25	8

(i) Write down the mode.

..... [1]

(ii) Calculate the mean.

View solution

..... [3]

(c) In a survey of 50 visitors to the leisure centre, 18 used the gym.
One day, 1500 people visited the leisure centre.

View solution

Calculate an estimate for the number of people who used the gym on this day.

..... [2]

4 **(a)** **(i)** Complete the table of values for $y = x^2 - 5x$.

View solution

x	–1	0	1	2	3	4	5	6
y			–4	–6	–6	–4	0	

[2]

(ii) On the grid, draw the graph of $y = x^2 - 5x$ for $-1 \leqslant x \leqslant 6$.

View solution

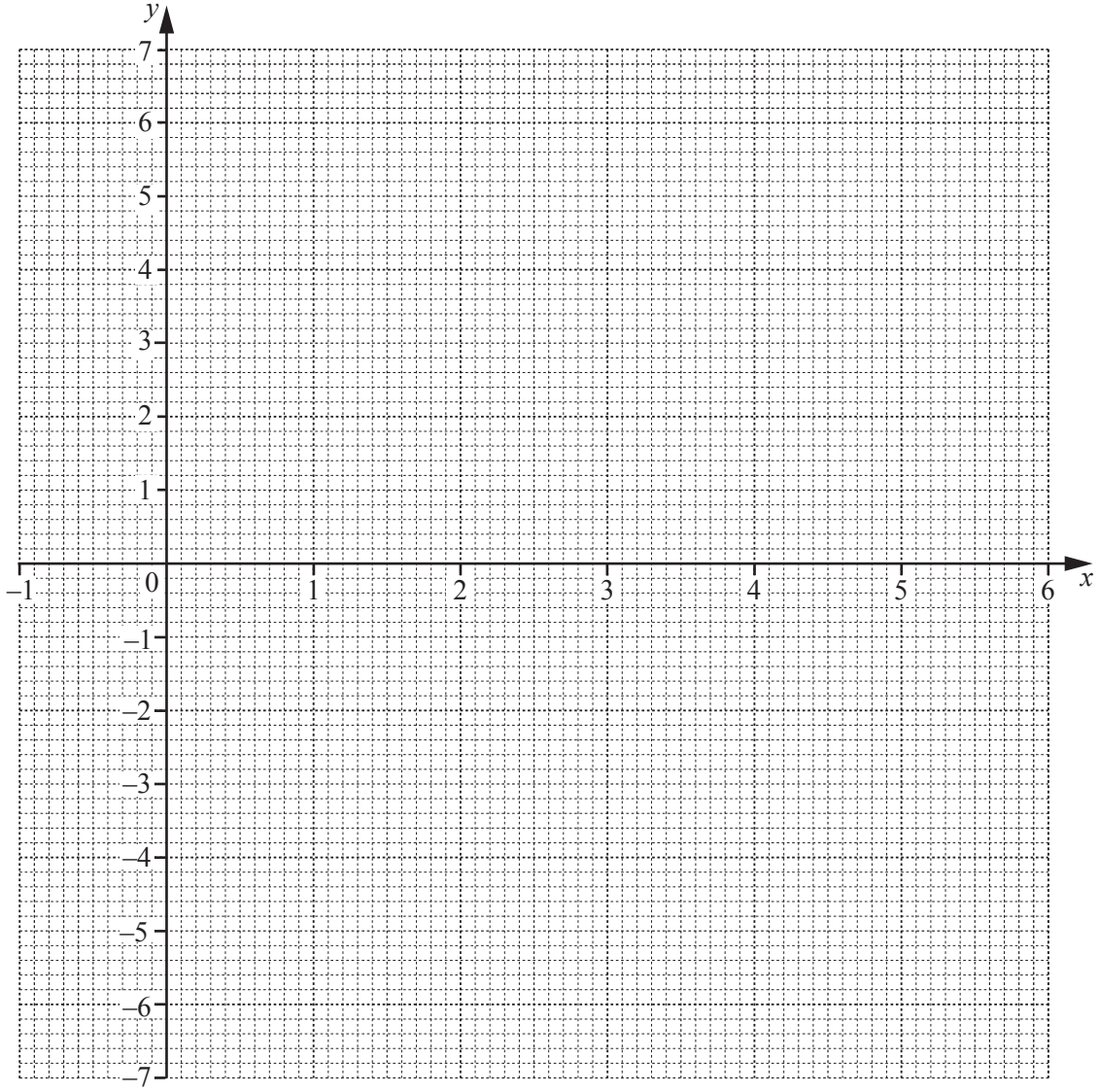

[4]

(iii) Write down the co-ordinates of the lowest point of your graph.

View solution

(..... , ...) [1]

(iv) Use your graph to solve the equation $x^2 - 5x = 3$.

View solution

x = ... or x = ... [2]

© UCLES 2018

(b)

View solution

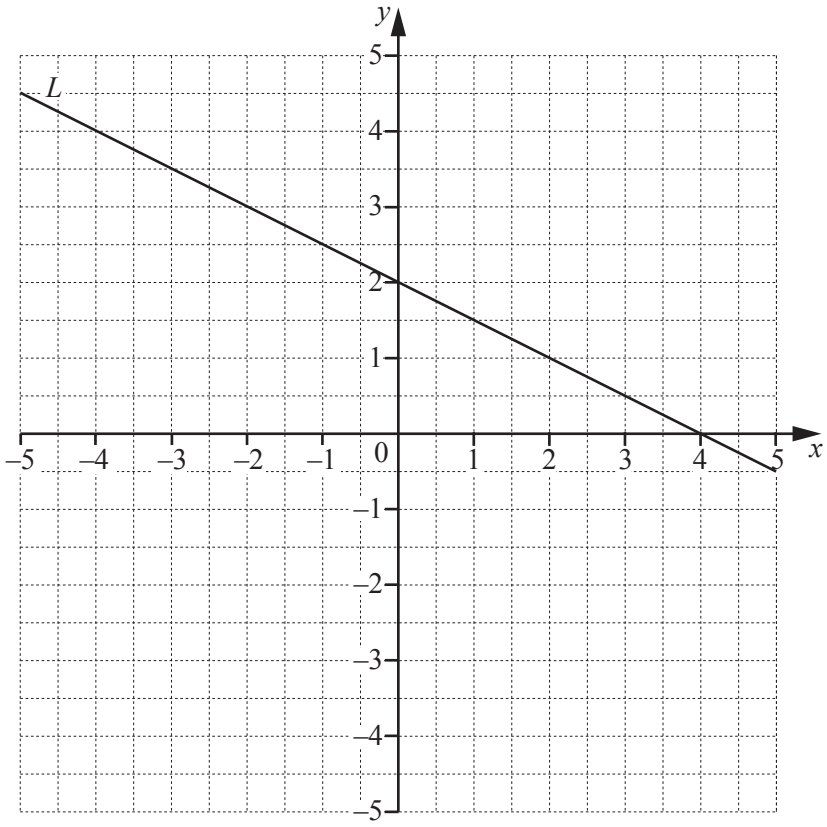

Line L is drawn on the grid.

(i) Find the equation of line L in the form $y = mx + c$.

$y =$ ..... [3]

(ii) Line P is parallel to line L and passes through the point $(0, -1)$.

On the grid above, draw line P for $-5 \leqslant x \leqslant 5$. [2]

View solution

5 **(a)** The scale drawing shows the positions of a lighthouse L and a ship S.
The scale is 1 centimetre represents 5 kilometres.

View solution

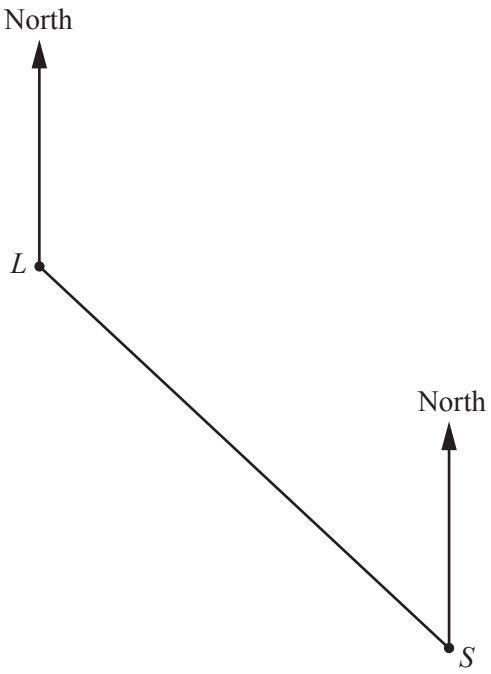

Scale: 1 cm to 5 km

(i) Work out the actual distance, in kilometres, from S to L.

..... km [2]

(ii) Measure the bearing of S from L.

View solution

..... [1]

(iii) Another ship, T, is 22 km from L on a bearing of 210°.

Mark and label the position of T on the scale drawing. [2]

View solution

(b) In this part, use a ruler and compasses only and show your construction arcs clearly.

View solution

The scale drawing shows the positions of two yachts, P and Q.
The scale is 1 centimetre represents 100 metres.



Scale: 1 cm to 100 m

(i) Construct the locus of points equidistant from P and Q. [2]

View solution

(ii) Another yacht, Y, is

- closer to P than to Q

and

- less than 700 m from Q.

On the scale drawing, construct and shade the region where yacht Y is. [3]

© UCLES 2018

6 (a)

View solution

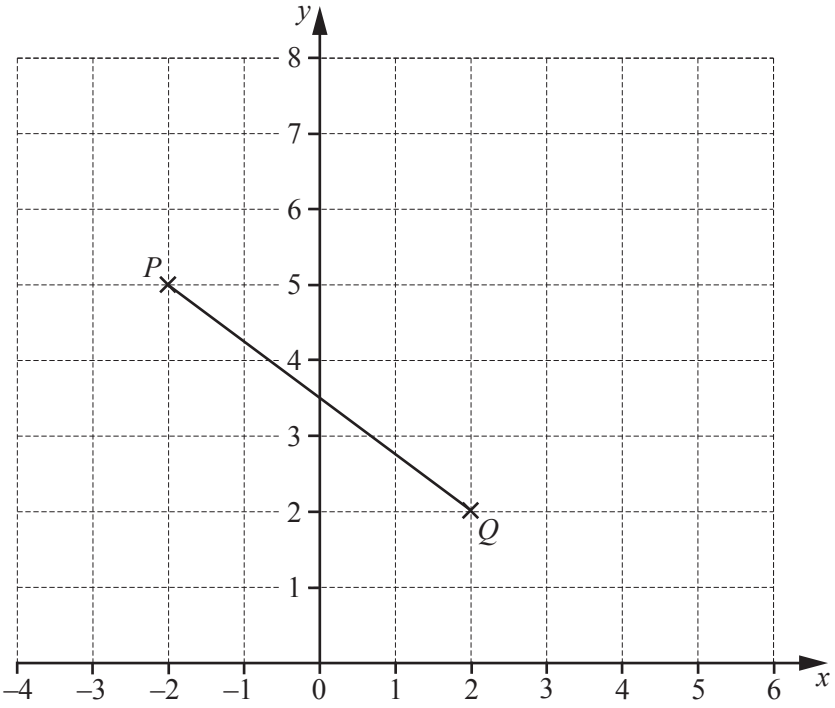

(i) Write down the co-ordinates of point P.

(..... , ...) [1]

(ii) Write down the column vector $\overrightarrow{PQ}$.

View solution

$\overrightarrow{PQ} = \begin{pmatrix} \quad \\ \quad \end{pmatrix}$ [1]

(iii) $\overrightarrow{QR} = \begin{pmatrix} 3 \\ 2 \end{pmatrix}$

View solution

On the grid, plot point R. [1]

(iv) $PQRS$ is a parallelogram.

View solution

On the grid, complete the parallelogram $PQRS$.
Write down the co-ordinates of point S.

(..... , ...) [2]

© UCLES 2018

(b)

View solution

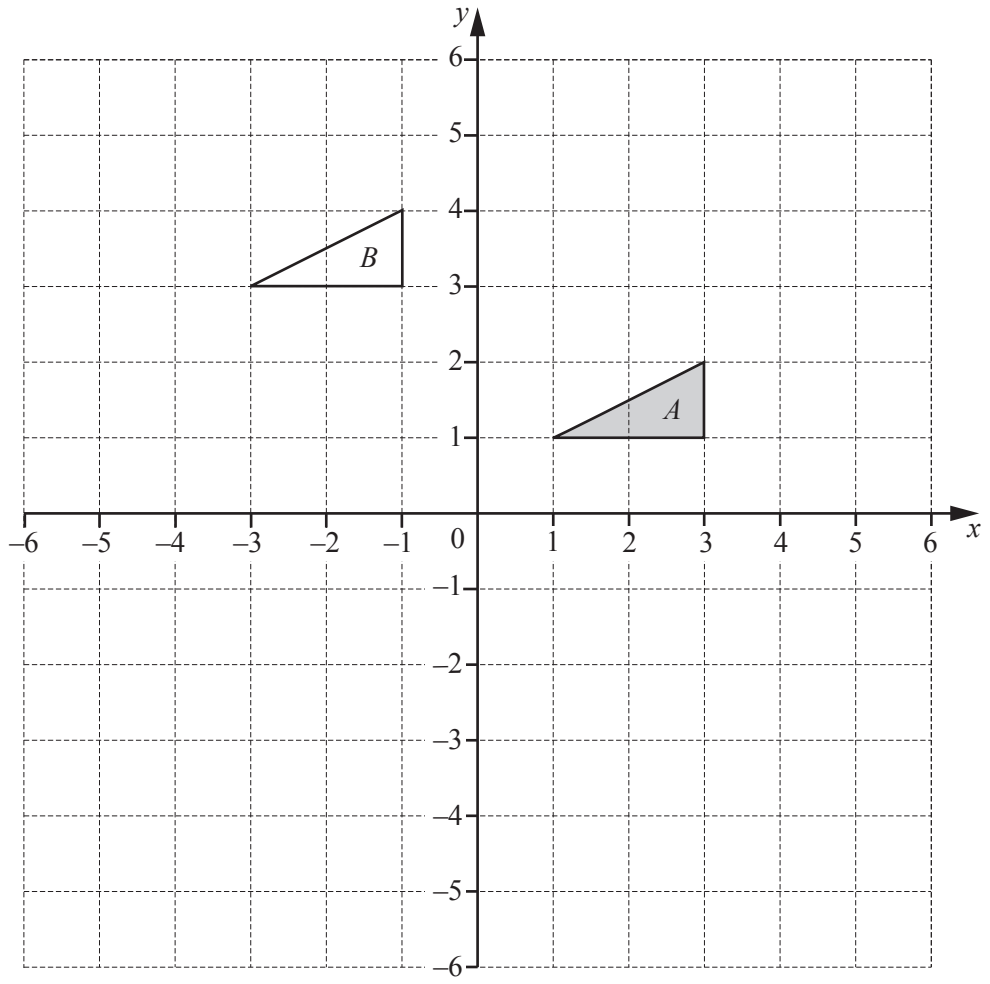

(i) Describe fully the **single** transformation that maps triangle *A* onto triangle *B*.

.....

..... [2]

(ii) On the grid, draw the image of triangle *A* after a reflection in the line $y = -1$. [2]

(iii) On the grid, draw the image of triangle *A* after a rotation through 180° about (0, 0). [2]

© UCLES 2018

7 Nora makes a birthday cake.

(a) Nora has a packet containing 250 g of cherries.

She uses $\frac{7}{10}$ of the cherries in the cake.

Find the mass of cherries she has left.

View solution

..... g [2]

(b) The cake is made by putting a small cylinder of cake on top of a large cylinder of cake.

The radius of the large cylinder is 15 cm.
The radius of the small cylinder is 8 cm.
The height of each cylinder is 10 cm.

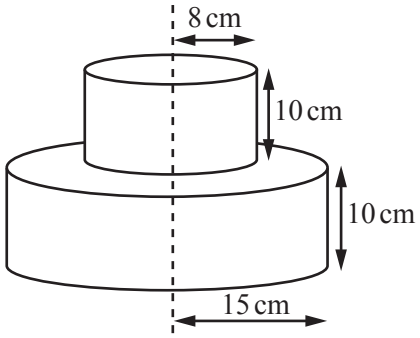

NOT TO SCALE

View solution

(i) Calculate the total volume of the cake.

..... cm^3 [3]

(ii) Nora wraps a ribbon around the large cylinder.
The ribbon is 4 cm longer than needed to go all the way around this cylinder.

Calculate the length of this ribbon.

View solution

..... cm [3]

(c) The mass, m grams, of the cake is 1250 g, correct to the nearest 10 g.

Complete this statement about the value of m.

View solution

..... $\leqslant m <$ ..... [2]

© UCLES 2018

8 **(a)** Simplify.

$4c + 2d - c + 6d$

View solution

..... [2]

(b) $h = 5m - 2n$

View solution

Calculate h when $m = 4$ and $n = -6$.

..... [2]

(c) Solve.

$7(x - 3) = 56$

View solution

$x =$ ..... [2]

(d) Make t the subject of the formula $r = 6t + 7$.

View solution

$t =$ ..... [2]

(e) The diagram shows a triangle.

View solution

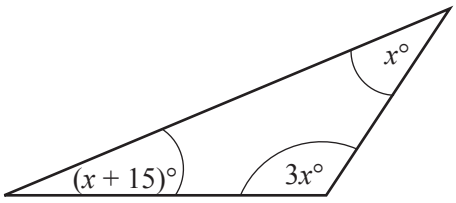

NOT TO SCALE

Use the diagram to write down an equation and solve it to find the value of x.

$x =$ ..... [4]

Question 9 is printed on the next page.

© UCLES 2018

9

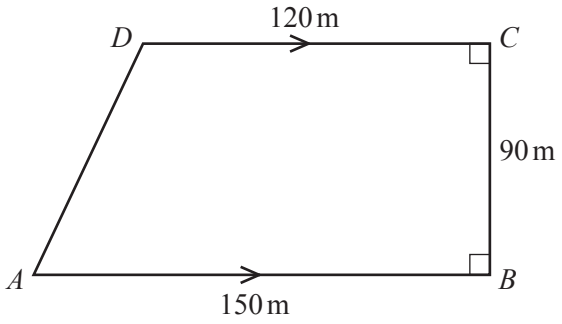

NOT TO SCALE

The diagram shows a field in the shape of a trapezium.
$AB = 150$ m, $BC = 90$ m and $CD = 120$ m.
Angle ABC = angle $BCD = 90°$.

(a) Calculate the area of the field.

View solution

.....m^2 [2]

(b) (i) Show that $AD = 95$ m, correct to the nearest metre.

View solution

[3]

(ii) A fence is built around the perimeter of the field.
It costs \$48 to build each 5-metre section of the fence.

Calculate the cost of building this fence.

View solution

\$ ..... [3]

Permission to reproduce items where third-party owned material protected by copyright is included has been sought and cleared where possible. Every reasonable effort has been made by the publisher (UCLES) to trace copyright holders, but if any items requiring clearance have unwittingly been included, the publisher will be pleased to make amends at the earliest possible opportunity.

To avoid the issue of disclosure of answer-related information to candidates, all copyright acknowledgements are reproduced online in the Cambridge International Examinations Copyright Acknowledgements Booklet. This is produced for each series of examinations and is freely available to download at www.cie.org.uk after the live examination series.

Cambridge International Examinations is part of the Cambridge Assessment Group. Cambridge Assessment is the brand name of University of Cambridge Local Examinations Syndicate (UCLES), which is itself a department of the University of Cambridge.

© UCLES 2018