Cambridge IGCSE

Cambridge International Examinations
Cambridge International General Certificate of Secondary Education

CANDIDATE NAME									
CENTRE NUMBER						CANDIDATE NUMBER				

MATHEMATICS **0580/41**

Paper 4 (Extended) **October/November 2018**

2 hours 30 minutes

Candidates answer on the Question Paper.

Additional Materials: Electronic calculator
Tracing paper (optional)
Geometrical instruments

READ THESE INSTRUCTIONS FIRST

Write your Centre number, candidate number and name on all the work you hand in.
Write in dark blue or black pen.
You may use an HB pencil for any diagrams or graphs.
Do not use staples, paper clips, glue or correction fluid.
DO **NOT** WRITE IN ANY BARCODES.

Answer **all** questions.
If working is needed for any question it must be shown below that question.
Electronic calculators should be used.
If the degree of accuracy is not specified in the question, and if the answer is not exact, give the answer to three significant figures. Give answers in degrees to one decimal place.
For π, use either your calculator value or 3.142.

At the end of the examination, fasten all your work securely together.
The number of marks is given in brackets [ ] at the end of each question or part question.
The total of the marks for this paper is 130.

This document consists of **16** printed pages.

© UCLES 2018

CAMBRIDGE International Examinations

1 Marianne sells photos.

(a) The selling price of each photo is \$6.

View solution

(i) The selling price for each photo is made up of two parts, printing cost and profit.
For each photo, the ratio printing cost : profit = 5 : 3.

Calculate the profit she makes on each photo.

\$ ..... [2]

(ii) Calculate her profit as a percentage of the selling price.

View solution

..... % [1]

(iii) Calculate the selling price of a photo in euros (€) when the exchange rate is €1 = \$1.091 .

View solution

€ ..... [2]

(b) Marianne sells two sizes of photo.
These photos are mathematically similar rectangles.
The smaller photo has length 15 cm and width 12 cm.
The larger photo has area 352.8 cm^2.

View solution

Calculate the length of the larger photo.

..... cm [3]

(c) In a sale, Marianne buys a new camera for \$483.
This is a reduction of 8% on the original price.

View solution

Calculate the original price of the camera.

\$ ..... [3]

© UCLES 2018

2

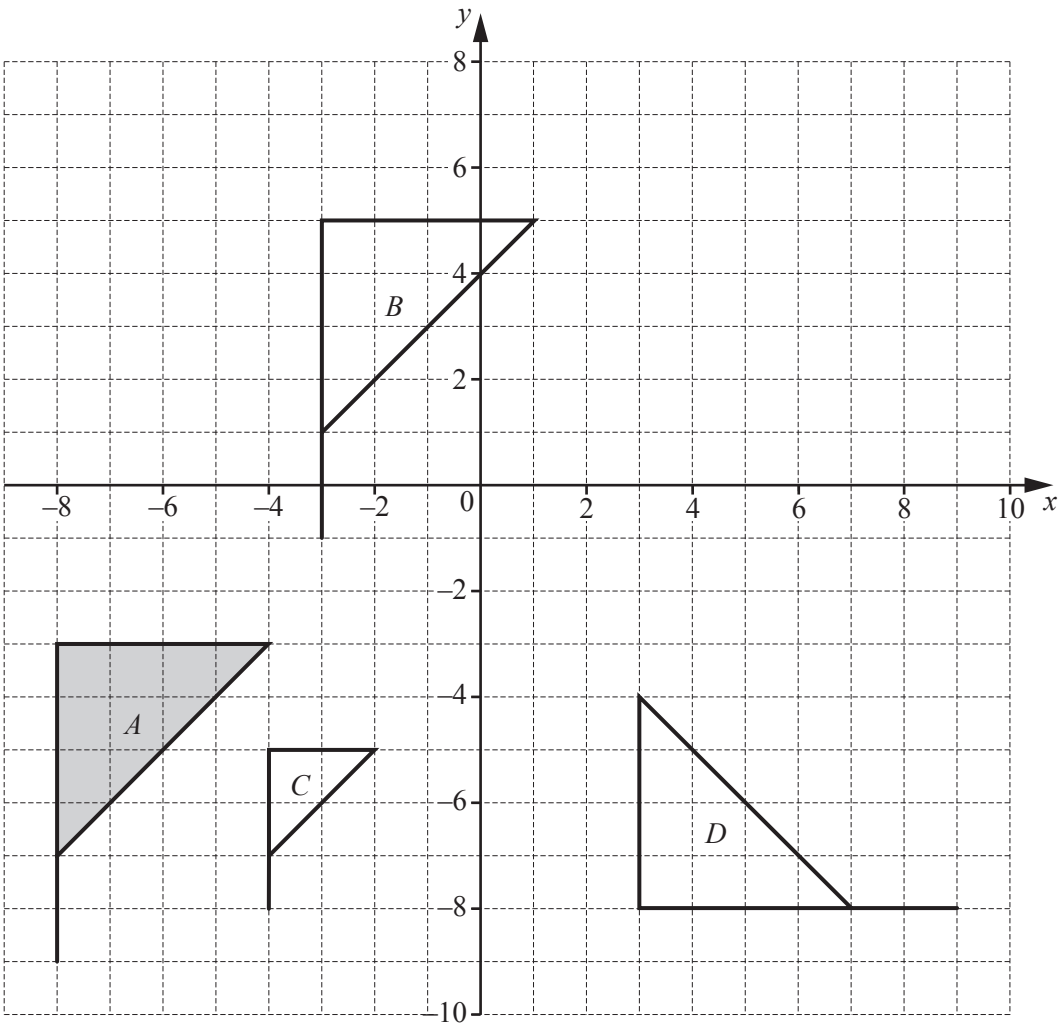

(a) Describe fully the **single** transformation that maps

(i) flag *A* onto flag *B*,

.....

..... [2]

View solution

(ii) flag *A* onto flag *C*,

.....

..... [3]

View solution

(iii) flag *A* onto flag *D*.

.....

..... [3]

View solution

(b) Draw the reflection of flag *A* in the line $y = -1$. [2]

View solution

3 The table shows some values of $y = x^3 - 3x^2 + x$.

x	−0.75	−0.5	−0.25	0	0.5	1	1.5	2	2.5	2.75
y	−2.9	−1.4	−0.5		−0.1	−1	−1.9		−0.6	

(a) Complete the table. View solution [3]

(b) On the grid, draw the graph of $y = x^3 - 3x^2 + x$ for $-0.75 \leqslant x \leqslant 2.75$. [4]

View solution

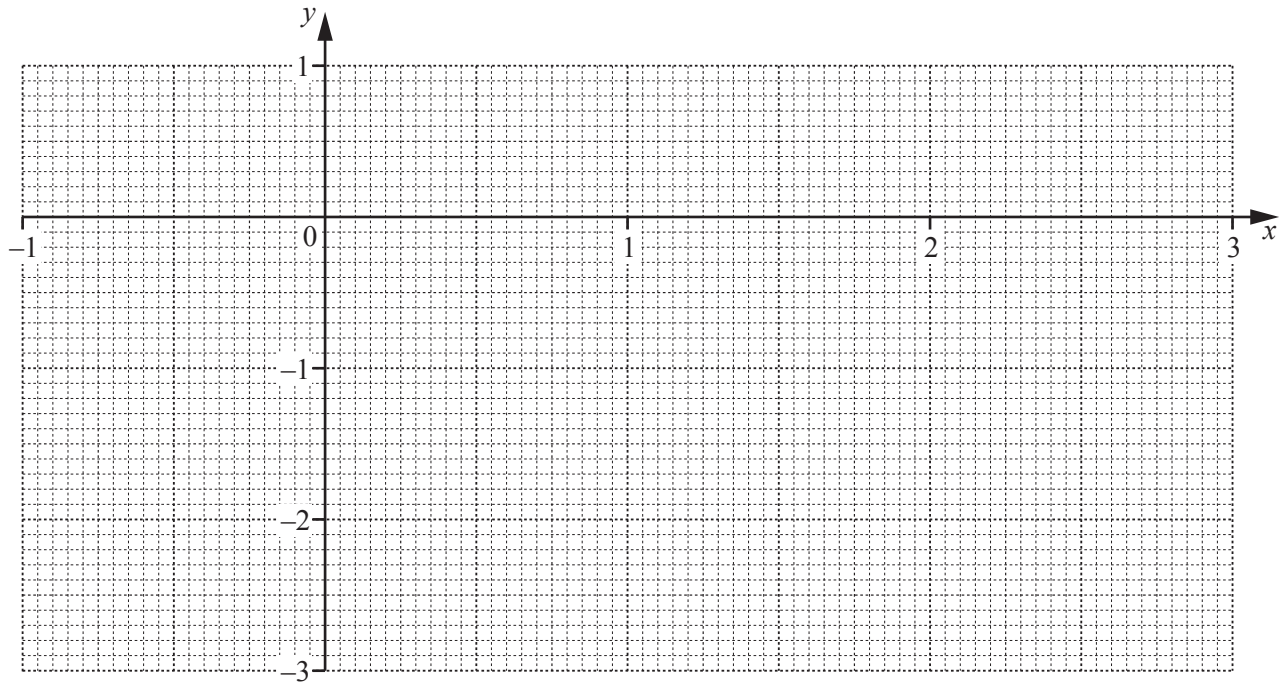

(c) Use your graph to complete the inequalities in x for which $y > -1$.

View solution

..... $< x <$ ..... and $x >$ ..... [3]

(d) The equation $x^3 - 3x^2 + 2x - 1 = 0$ can be solved by drawing a straight line on the grid.

View solution

(i) Write down the equation of this line.

..... [2]

(ii) On the grid, draw this line and use it to solve the equation $x^3 - 3x^2 + 2x - 1 = 0$.

View solution

$x =$ ..... [3]

(e) By drawing a suitable tangent, find an estimate for the gradient of the graph of $y = x^3 - 3x^2 + x$ at $x = -0.25$.

View solution

..... [3]

© UCLES 2018

4 A school nurse records the height, h cm, of each of 180 children.
The table shows the information.

Height (h cm)	$60 < h \leqslant 70$	$70 < h \leqslant 90$	$90 < h \leqslant 100$	$100 < h \leqslant 110$	$110 < h \leqslant 115$	$115 < h \leqslant 125$
Frequency	8	26	35	67	28	16

(a) Calculate an estimate of the mean.
Give your answer correct to 1 decimal place.

View solution

..... cm [4]

(b) In a histogram showing the information, the height of the bar for the interval $60 < h \leqslant 70$ is 0.4 cm.

Calculate the height of the bar for each of the following intervals.

View solution

$115 < h \leqslant 125$ ..... cm

$110 < h \leqslant 115$ ..... cm

$70 < h \leqslant 90$ ..... cm [3]

(c) Complete the cumulative frequency table below.

View solution

Height (h cm)	$h \leqslant 70$	$h \leqslant 90$	$h \leqslant 100$	$h \leqslant 110$	$h \leqslant 115$	$h \leqslant 125$
Cumulative frequency						180

[2]

(d) On the grid opposite, draw a cumulative frequency diagram.

View solution

© UCLES 2018

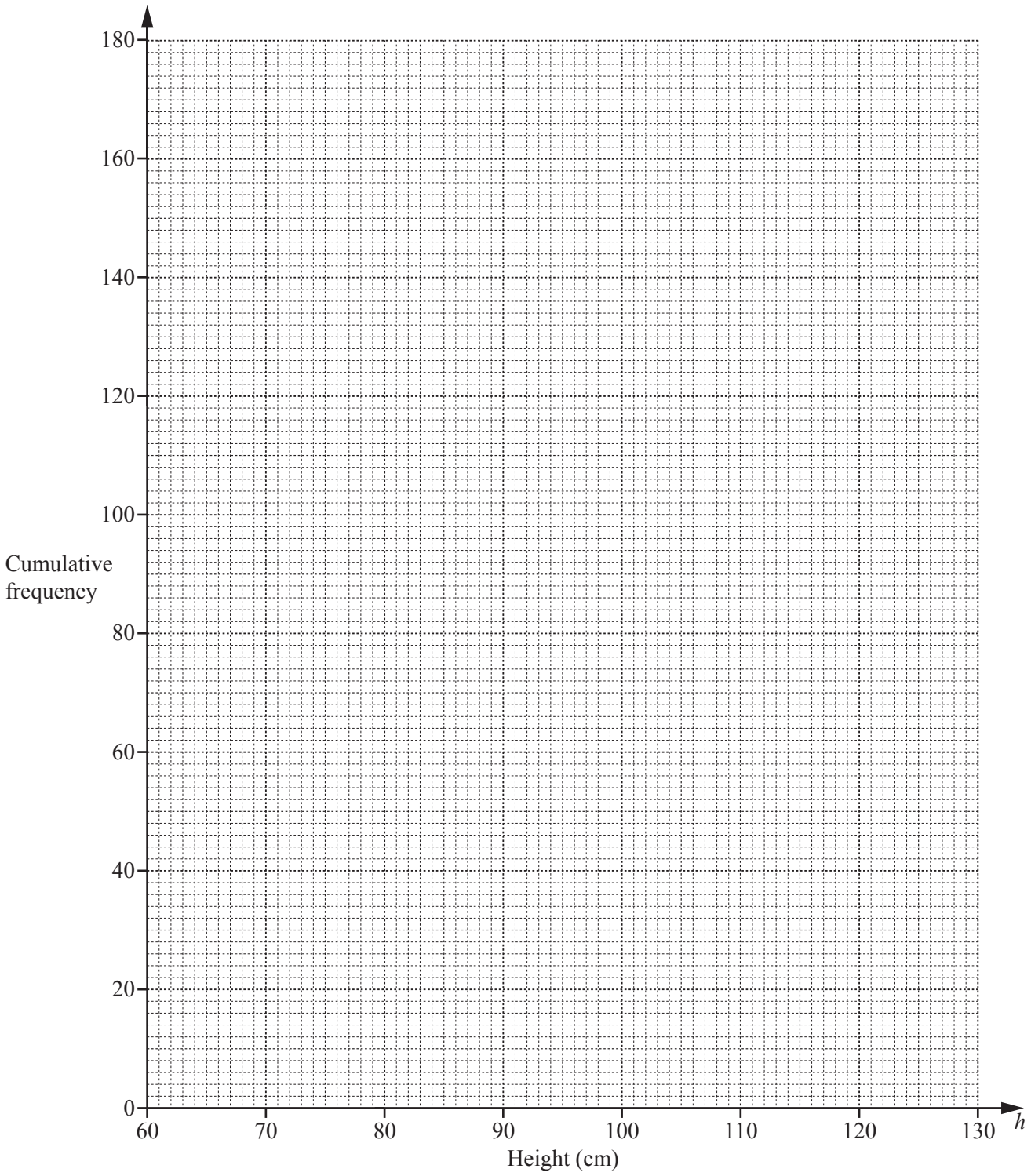

[3]

View solution

(e) Use your cumulative frequency diagram to find an estimate of

(i) the interquartile range,

..... cm [2]

(ii) the 70th percentile,

..... cm [2]

(iii) the number of children with height greater than 106 cm.

..... [2]

© UCLES 2018

5

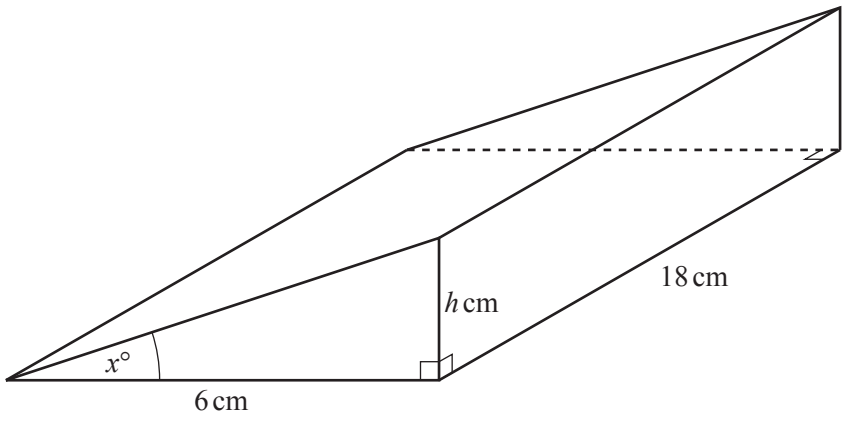

NOT TO SCALE

The diagram shows a prism with length 18 cm and volume 253.8 cm^3.
The cross-section of the prism is a right-angled triangle with base 6 cm and height h cm.

(a) (i) Show that the value of h is 4.7 .

View solution

[3]

(ii) Calculate the value of x.

View solution

x = ... [2]

(b) Calculate the total surface area of the prism.

View solution

..... cm^2 [6]

© UCLES 2018

6 (a)

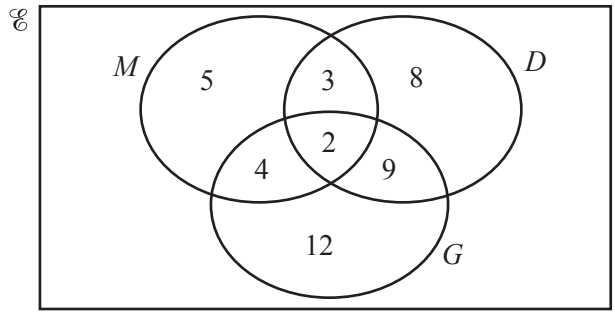

The Venn diagram above shows information about the number of students who study Music (M), Drama (D) and Geography (G).

(i) How many students study Music?

..... [1]

(ii) How many students study exactly two subjects?

..... [1]

(iii) Two students are chosen at random from those who study Drama.

Calculate the probability that they both also study Music.

..... [3]

(iv) In the Venn diagram above, shade $M \cap D'$. [1]

(b) (i) $\mathscr{E} = \{x : x \text{ is an integer and } 1 \leqslant x \leqslant 10\}$

$A = \{x : x \text{ is even}\}$

$4 \in A \cap B$

$\mathrm{n}(A \cap B) = 1$

$(A \cup B)' = \{1, 7, 9\}$

Complete the Venn diagram below using this information.

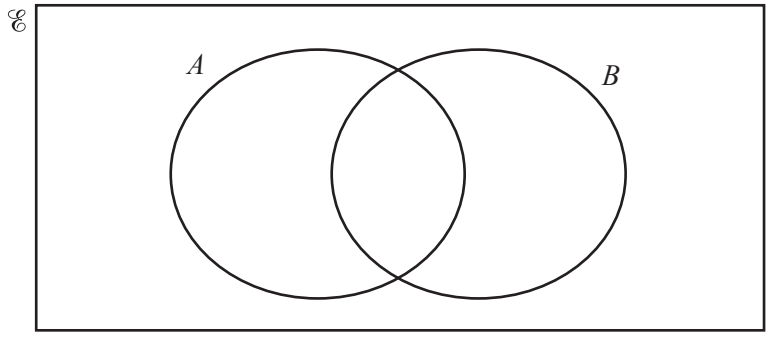

[4]

(ii) Use your Venn diagram to complete the statement.

$B = \{.....\}$ [1]

© UCLES 2018

7 **(a)**

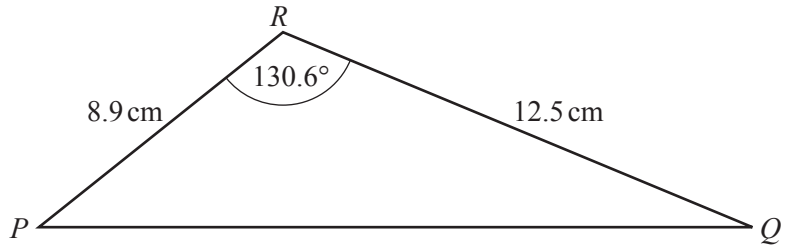

NOT TO SCALE

View solution

Calculate the area of triangle PQR.

..... cm^2 [2]

(b)

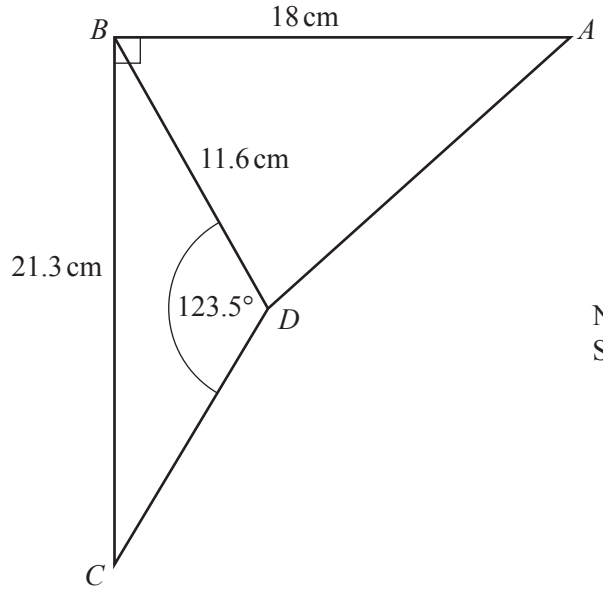

NOT TO SCALE

View solution

In the diagram, $AB = 18$ cm, $BC = 21.3$ cm and $BD = 11.6$ cm.
Angle $BDC = 123.5°$ and angle ABC is a right angle.

(i) Calculate angle BCD.

Angle BCD = ... [3]

(ii) Calculate AD.

View solution

AD = ... cm [5]

8

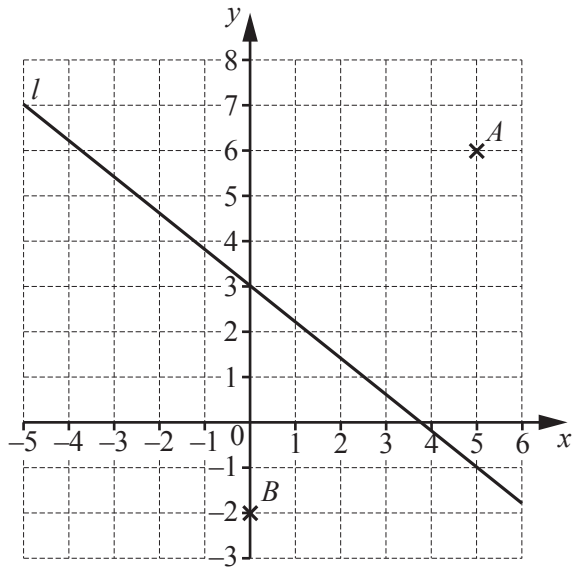

View solution

(a) Write down the co-ordinates of A.

(..... , ...) [1]

(b) Find the equation of line l in the form $y = mx + c$.

View solution

$y =$ ..... [3]

(c) Write down the equation of the line parallel to line l that passes through the point B.

View solution

..... [2]

(d) C is the point (8, 14).

View solution

(i) Write down the equation of the line perpendicular to line l that passes through the point C.

..... [3]

(ii) Calculate the length of AC.

View solution

..... [3]

(iii) Find the co-ordinates of the mid-point of BC.

View solution

(..... , ...) [2]

© UCLES 2018

9 Paulo and Jim each buy sacks of rice but from different shops.
Paulo pays \$72 for sacks costing \$$m$ each.
Jim pays \$72 for sacks costing \$(m + 0.9) each.

(a) (i) Find an expression, in terms of m, for the number of sacks Paulo buys.

View solution

..... [1]

(ii) Find an expression, in terms of m, for the number of sacks Jim buys.

View solution

..... [1]

(b) Paulo buys 4 more sacks than Jim.

View solution

Write down an equation, in terms of m, and show that it simplifies to $10m^2 + 9m - 162 = 0$.

[4]

(c) (i) Solve $10m^2 + 9m - 162 = 0$.

View solution

m = ... or m = ... [3]

(ii) Find the number of sacks of rice that Paulo buys.

View solution

..... [1]

© UCLES 2018

10

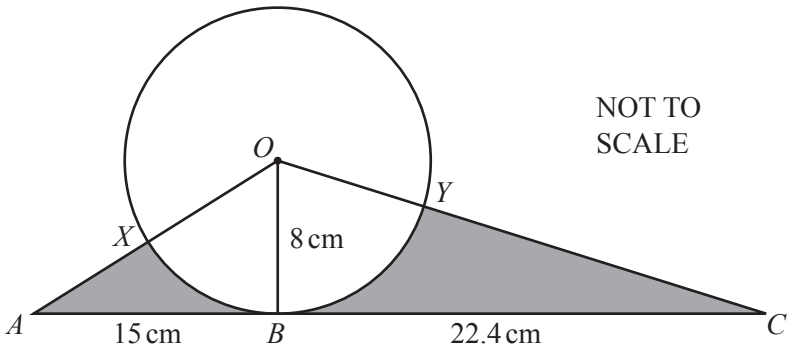

The diagram shows a circle, centre O.
The straight line ABC is a tangent to the circle at B.
$OB = 8$ cm, $AB = 15$ cm and $BC = 22.4$ cm.
AO crosses the circle at X and OC crosses the circle at Y.

(a) Calculate angle XOY.

View solution

Angle XOY = ... [5]

(b) Calculate the length of the arc XBY.

View solution

..... cm [2]

© UCLES 2018

(c) Calculate the total area of the two shaded regions.

View solution

..... cm^2 [4]

Question 11 is printed on the next page.

11 **(a)** Factorise $5m^2 - 20p^4$.

View solution

..... [3]

(b) Make P the subject of the formula $A = P + \frac{PRT}{100}$.

View solution

$P =$ ..... [3]

Permission to reproduce items where third-party owned material protected by copyright is included has been sought and cleared where possible. Every reasonable effort has been made by the publisher (UCLES) to trace copyright holders, but if any items requiring clearance have unwittingly been included, the publisher will be pleased to make amends at the earliest possible opportunity.

To avoid the issue of disclosure of answer-related information to candidates, all copyright acknowledgements are reproduced online in the Cambridge International Examinations Copyright Acknowledgements Booklet. This is produced for each series of examinations and is freely available to download at www.cie.org.uk after the live examination series.

Cambridge International Examinations is part of the Cambridge Assessment Group. Cambridge Assessment is the brand name of University of Cambridge Local Examinations Syndicate (UCLES), which is itself a department of the University of Cambridge.

© UCLES 2018