Cambridge IGCSE

Cambridge Assessment International Education
Cambridge International General Certificate of Secondary Education

CANDIDATE NAME									
CENTRE NUMBER						CANDIDATE NUMBER				

MATHEMATICS **0580/21**

Paper 2 (Extended) **October/November 2019**

1 hour 30 minutes

Candidates answer on the Question Paper.

Additional Materials: Electronic calculator
Tracing paper (optional)
Geometrical instruments

READ THESE INSTRUCTIONS FIRST

Write your centre number, candidate number and name on all the work you hand in.
Write in dark blue or black pen.
You may use an HB pencil for any diagrams or graphs.
Do not use staples, paper clips, glue or correction fluid.
DO **NOT** WRITE IN ANY BARCODES.

Answer **all** questions.
If working is needed for any question it must be shown below that question.
Electronic calculators should be used.
If the degree of accuracy is not specified in the question, and if the answer is not exact, give the answer to three significant figures. Give answers in degrees to one decimal place.
For π, use either your calculator value or 3.142.

At the end of the examination, fasten all your work securely together.
The number of marks is given in brackets [ ] at the end of each question or part question.
The total of the marks for this paper is 70.

This document consists of **11** printed pages and **1** blank page.

© UCLES 2019

Cambridge Assessment International Education

1 Work out 5% of $25.

View solution

$ ..... [1]

2 Factorise $5p + pt$.

View solution

..... [1]

3 Calculate.

$$\frac{16.379 - 0.879}{4.2} \times 1.241$$

Give your answer correct to 2 significant figures.

View solution

..... [2]

4 Write 15 060

(a) in words,

View solution

..... [1]

(b) in standard form.

View solution

..... [1]

5 Simplify $5c - d - 3d - 2c$.

View solution

..... [2]

6 Solve.

$$\frac{x-2}{3} = 3$$

View solution

$x =$ ..... [2]

© UCLES 2019

7 Simplify $2x^3 \times 3x^2$.

View solution

..... [2]

8 **Without using a calculator**, work out $\frac{5}{16} \times 1\frac{1}{7}$.

View solution

You must show all your working and give your answer as a fraction in its simplest form.

..... [2]

9 Paula invests \$600 at a rate of r% per year simple interest.
At the end of 10 years, the total interest earned is \$90.

View solution

Find the value of r.

$r =$ ..... [2]

10 Simplify.

View solution

$$\left(\frac{x^3}{8}\right)^{-\frac{4}{3}}$$

..... [2]

© UCLES 2019

11 $P = 2r + \pi r$

View solution

Rearrange the formula to write r in terms of P and π.

$r =$ ..... [2]

12 The sides of a square are 15.1 cm, correct to 1 decimal place.

View solution

Find the upper bound of the area of the square.

..... cm^2 [2]

13

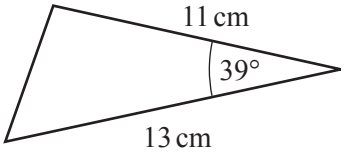

NOT TO SCALE

View solution

Calculate the area of the triangle.

..... cm^2 [2]

© UCLES 2019

14 The scale of a map is 1 : 10 000 000.
On the map, the area of Slovakia is 4.9 cm^2.

Calculate the actual area of Slovakia.
Give your answer in square kilometres.

View solution

..... km^2 [3]

15 y is inversely proportional to x^2.
When $x = 4$, $y = 2$.

Find y when $x = \frac{1}{2}$.

View solution

$y =$ ..... [3]

16

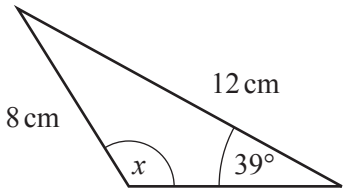

NOT TO SCALE

View solution

Calculate the **obtuse** angle x in this triangle.

$x =$ ..... [3]

17

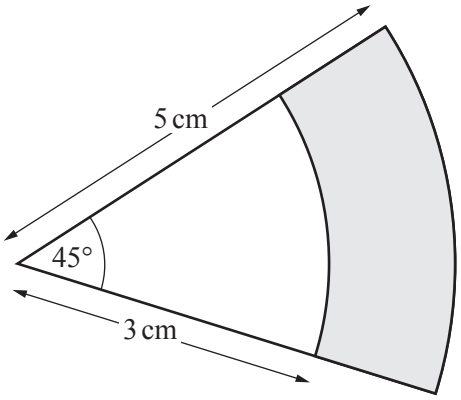

NOT TO SCALE

The diagram shows two sectors of circles with the same centre.

Calculate the shaded area.

..... cm^2 [3]

18 Write $\frac{x}{2} - \frac{2x+4}{x+1}$ as a single fraction, in its simplest form.

..... [3]

19 $\mathbf{M} = \begin{pmatrix} 1 & 2 \\ 3 & 4 \end{pmatrix}$ $\mathbf{P} = \begin{pmatrix} 5 & 6 \\ 7 & 8 \end{pmatrix}$

(a) Find **MP**.

View solution

( ) [2]

(b) Find $|\mathbf{M}|$.

View solution

..... [1]

20 The probability that the school bus is late is $\frac{9}{10}$.

View solution

If the school bus is late, the probability that Seb travels on the bus is $\frac{15}{16}$.

If the school bus is on time, the probability that Seb travels on the bus is $\frac{3}{4}$.

Find the probability that Seb travels on the bus.

..... [3]

© UCLES 2019

21

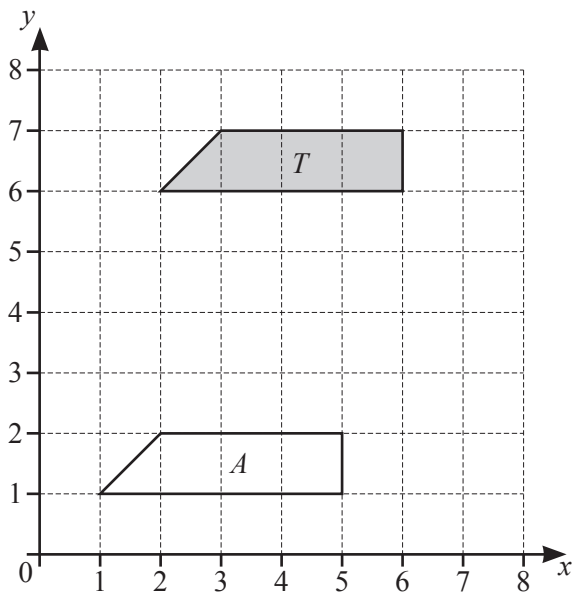

(a) Describe fully the **single** transformation that maps shape T onto shape A.

View solution

.....

..... [2]

(b) On the grid, reflect shape T in the line $y = x$.

View solution [2]

22 A pipe is completely full of water.
Water flows through the pipe at a speed of 1.2 m/s into a tank.
The cross-section of the pipe has an area of 6 cm^2.

View solution

Calculate the number of litres of water flowing into the tank in 1 hour.

..... litres [4]

© UCLES 2019

23 $\mathscr{E} = \{0, 1, 2, 3, 4, 5, 6\}$ $A = \{0, 2, 4, 5, 6\}$ $B = \{1, 2, 5\}$

View solution

Complete each of the following statements.

$A \cap B =$ {.....}

$n(B) =$ .....

$\{0, 4, 6\} =$ ..... $\cap$ .....

$\{2, 4\}$ ..... A [4]

24 $f(x) = 3x - 5$ $g(x) = 2^x$

View solution

(a) Find fg(3).

..... [2]

(b) Find $f^{-1}(x)$.

View solution

$f^{-1}(x) =$ ..... [2]

25

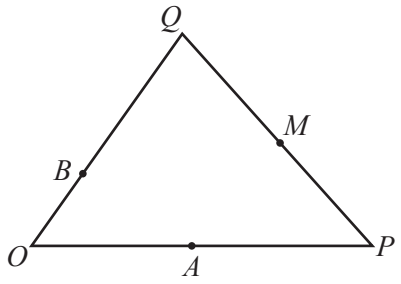

NOT TO SCALE

O is the origin, $\overrightarrow{OP} = 2\overrightarrow{OA}$, $\overrightarrow{OQ} = 3\overrightarrow{OB}$ and $\overrightarrow{PM} = \overrightarrow{MQ}$.

$\overrightarrow{OP} = \mathbf{p}$ and $\overrightarrow{OQ} = \mathbf{q}$.

Find, in terms of **p** and **q**, in its simplest form

(a) $\overrightarrow{BA}$,

View solution

$\overrightarrow{BA} =$ ..... [2]

(b) the position vector of M.

View solution

..... [2]

© UCLES 2019

26

View solution

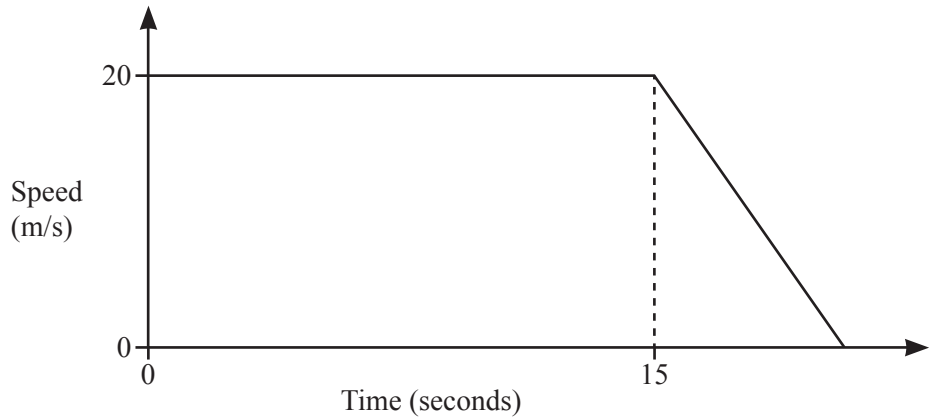

NOT TO SCALE

A car travels at 20 m/s for 15 seconds before it comes to rest by decelerating at 2.5 m/s^2.

Find the total distance travelled.

..... m [5]

BLANK PAGE

Permission to reproduce items where third-party owned material protected by copyright is included has been sought and cleared where possible. Every reasonable effort has been made by the publisher (UCLES) to trace copyright holders, but if any items requiring clearance have unwittingly been included, the publisher will be pleased to make amends at the earliest possible opportunity.

To avoid the issue of disclosure of answer-related information to candidates, all copyright acknowledgements are reproduced online in the Cambridge Assessment International Education Copyright Acknowledgements Booklet. This is produced for each series of examinations and is freely available to download at www.cambridgeinternational.org after the live examination series.

Cambridge Assessment International Education is part of the Cambridge Assessment Group. Cambridge Assessment is the brand name of the University of Cambridge Local Examinations Syndicate (UCLES), which itself is a department of the University of Cambridge.

© UCLES 2019