Cambridge IGCSE

Cambridge Assessment International Education
Cambridge International General Certificate of Secondary Education

CANDIDATE NAME									
CENTRE NUMBER						CANDIDATE NUMBER				

MATHEMATICS **0580/33**

Paper 3 (Core) **October/November 2019**

2 hours

Candidates answer on the Question Paper.

Additional Materials: Electronic calculator
Tracing paper (optional)
Geometrical instruments

READ THESE INSTRUCTIONS FIRST

Write your centre number, candidate number and name on all the work you hand in.
Write in dark blue or black pen.
You may use an HB pencil for any diagrams or graphs.
Do not use staples, paper clips, glue or correction fluid.
DO **NOT** WRITE IN ANY BARCODES.

Answer **all** questions.
If working is needed for any question it must be shown below that question.
Electronic calculators should be used.
If the degree of accuracy is not specified in the question, and if the answer is not exact, give the answer to three significant figures. Give answers in degrees to one decimal place.
For π, use either your calculator value or 3.142.

At the end of the examination, fasten all your work securely together.
The number of marks is given in brackets [ ] at the end of each question or part question.
The total of the marks for this paper is 104.

This document consists of **16** printed pages.

© UCLES 2019

Cambridge Assessment International Education

1 **(a)** Write $\frac{1}{4}$ as a decimal.

View solution

..... [1]

(b) Write $\frac{36}{124}$ as a fraction in its lowest terms.

View solution

..... [1]

(c) Work out $\frac{5}{8}$ of 128.

View solution

..... [1]

(d) Write down all the factors of 24.

View solution

..... [2]

(e) Find the highest common factor (HCF) of 24 and 108.

View solution

..... [2]

(f) Write down an irrational number between 3 and 9.

View solution

..... [1]

© UCLES 2019

(g) Write down the value of 25^0.

View solution

..... [1]

(h) $8400 is invested for 2 years at a rate of 3.5% per year compound interest.

View solution

Work out the total amount of interest earned by the end of the 2 years.

$..... [3]

(i) **Without using a calculator**, work out $2\frac{1}{3} + \frac{4}{5}$.
You must show all your working and give your answer as a mixed number in its simplest form.

View solution

..... [3]

2 **(a)** Emma records the number of letters in each word in a sentence.

View solution

7 1 5 4 2 4 5 3 3 1 2 4

Find

(i) the median,

..... [2]

(ii) the mode,

View solution

..... [1]

(iii) the range.

View solution

..... [1]

(b) Jack records the number of letters in 25 words.

View solution

Number of letters in a word	Number of words
1	3
2	1
3	5
4	8
5	6
6	2

(i) Calculate the mean.

..... [3]

(ii) Priti picks one of Jack's words at random.

View solution

Find the probability that this word has 4 or more letters.

..... [2]

© UCLES 2019

(c) The table shows information about the first 90 words in a book.

View solution

(i) Complete the table.

Length of word	Frequency	Pie chart angle
Very short	6	24°
Short	34	
Medium	41	
Long	9	

[2]

View solution

(ii) Complete the pie chart to show this information.

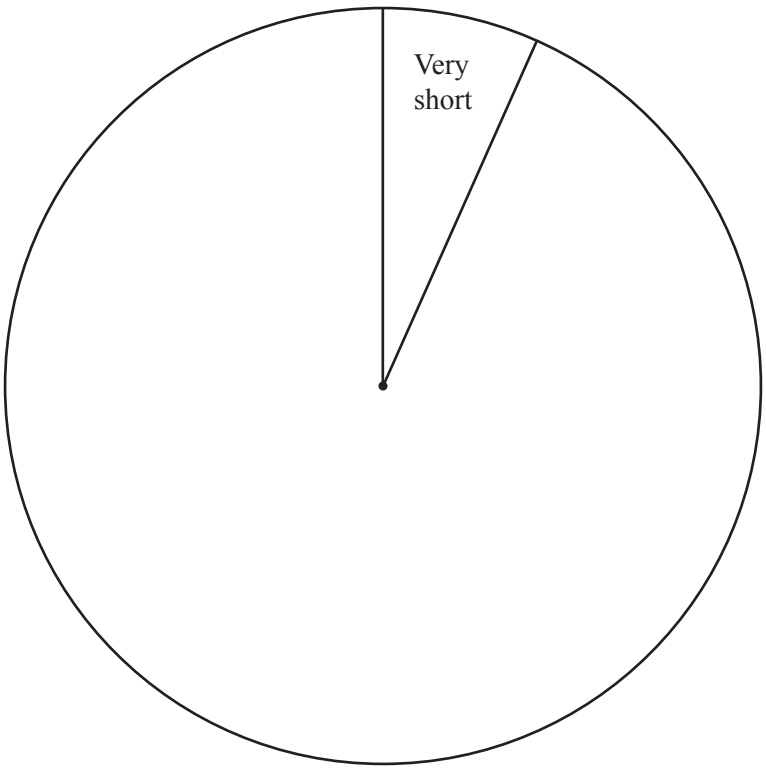

[2]

3

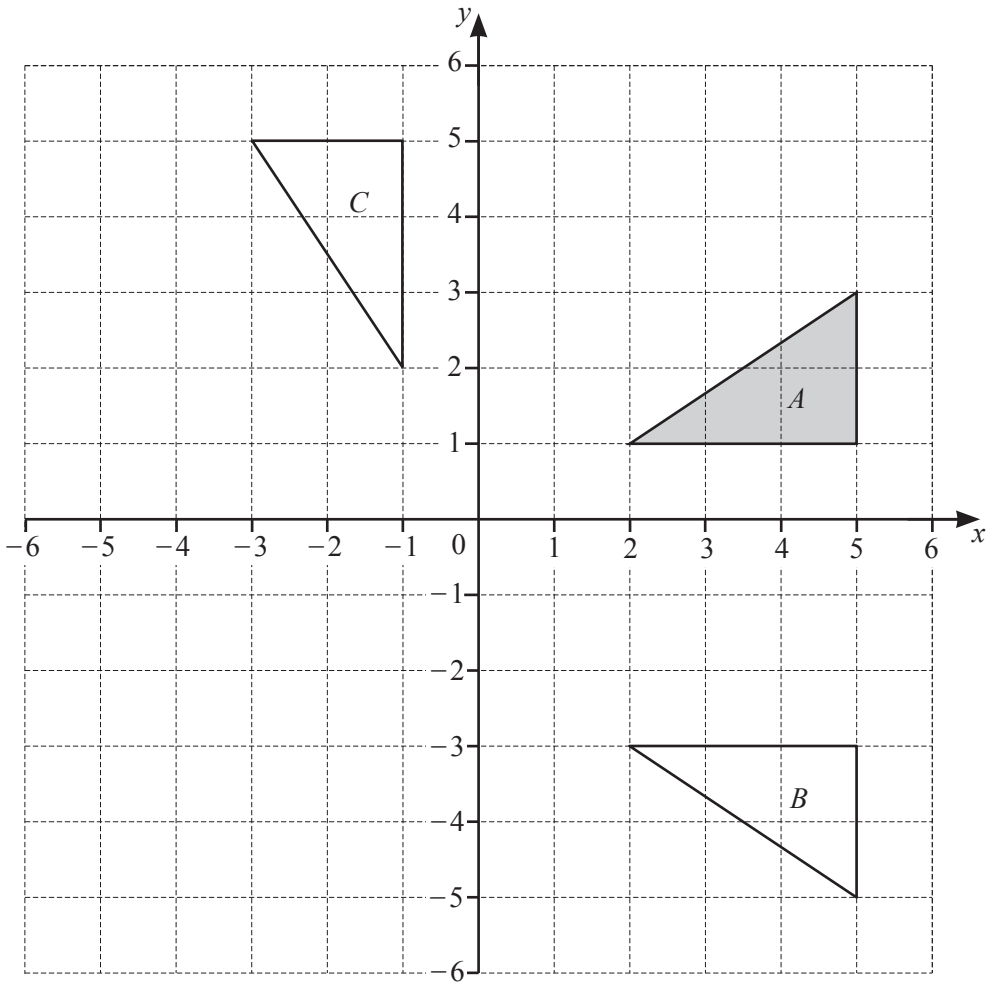

(a) Describe fully the **single** transformation that maps triangle A onto triangle B.

View solution

.....

..... [2]

(b) Describe fully the **single** transformation that maps triangle A onto triangle C.

View solution

.....

..... [3]

(c) On the grid, draw the image of triangle A after a translation by the vector $\begin{pmatrix} -2 \\ -3 \end{pmatrix}$. [2]

View solution

(d) On the grid, draw the image of triangle A after a rotation of 180° about (2, 1). [2]

View solution

4 **(a)** A plane leaves Karachi at 1530 to fly to Bangkok.
The distance is 3840 km.

View solution

The plane flies at an average speed of 720 km/h.
The local time in Bangkok is 2 hours ahead of the local time in Karachi.

Find the local time in Bangkok when the plane arrives.

..... [4]

(b) In Bangkok a watch costs 2610 baht.
The exchange rate is \$1 = 34.8 baht.

View solution

Find the cost of the watch in dollars.

\$..... [2]

(c) The price of another watch increases from \$18 to \$19.17 .

View solution

Find the percentage increase in the price of this watch.

..... % [3]

(d) Raoul makes a profit when he sells his watch for \$36.
The ratio of the price Raoul paid for the watch and the profit he makes is price paid : profit = 7 : 2.

View solution

Work out the profit that Raoul makes.

\$..... [2]

© UCLES 2019

5 **(a)** Simplify.

$9x - 2y - 5x - y$

View solution

..... [2]

(b) $P = 4ab + 3b^2$

View solution

Work out the value of a when $P = 35$ and $b = 5$.

$a =$ ..... [3]

(c) Solve.

View solution

(i) $10x = 5$

$x =$ ..... [1]

(ii) $7x - 3 = 2x + 11$

View solution

$x =$ ..... [2]

(iii) $3(2x - 1) = 27$

View solution

$x =$ ..... [3]

(d) Rearrange $T = 5(p+2)$ to make p the subject.

View solution

$p =$ ..... [2]

(e) Solve the simultaneous equations.
You must show all your working.

View solution

$$3x - y = 22$$
$$x + 2y = 5$$

$x =$ .....

$y =$ ..... [3]

6 **(a)** The scale drawing shows the positions of town *A* and town *B*.
The scale is 1 centimetre represents 12 kilometres.

View solution

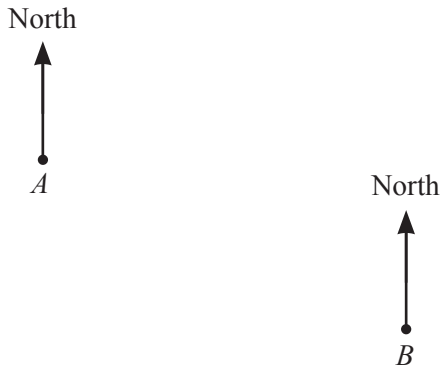

Scale : 1 cm to 12 km

(i) Measure the bearing of town *B* from town *A*.

..... [1]

(ii) Find the actual distance from town *A* to town *B*.

View solution

..... km [2]

(iii) Town *C* is on a bearing of 064° from town *A* and 028° from town *B*.

On the scale drawing, mark the position of town *C*. [2]

View solution

(b) The bearing of town D from town E is 245°.

Work out the bearing of town E from town D.

View solution

..... [2]

(c) The diagram shows three towns, P, Q and R.

View solution

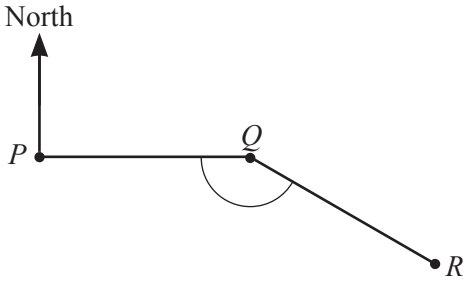

NOT TO SCALE

The bearing of town Q from town P is 090°.

(i) Complete the statement.

Town ..... is due west of town ..... . [1]

(ii) PQ and QR are two sides of a regular decagon.

View solution

Work out angle PQR.

Angle PQR = ... [3]

© UCLES 2019

7 **(a)** The diagram shows a shape made from two rectangles.

View solution

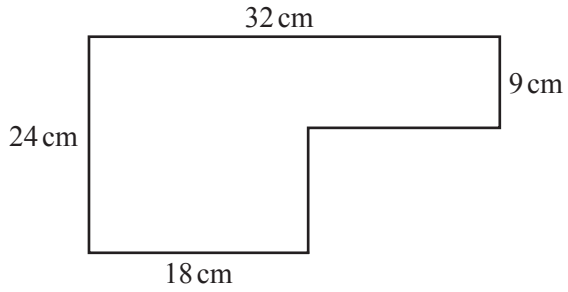

NOT TO SCALE

(i) Work out the perimeter.

..... cm [2]

(ii) Work out the area.

View solution

..... cm^2 [2]

(b) The diagram shows a triangle between two parallel lines, *AB* and *CD*.

View solution

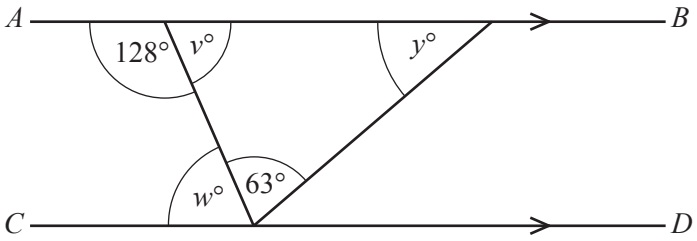

NOT TO SCALE

Find the value of

(i) *v*,

v = ... [1]

(ii) *w*,

View solution

w = ... [1]

(iii) *y*.

View solution

y = ... [1]

(c) These two cuboids have the same volume.

View solution

NOT TO SCALE

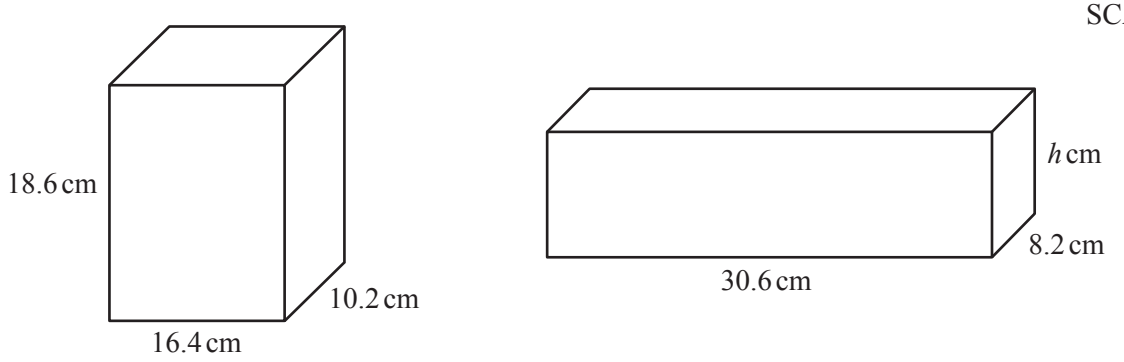

Find the value of h.

$h =$ ..... [3]

(d) The diagram shows two similar triangles, ABC and DEF.

View solution

NOT TO SCALE

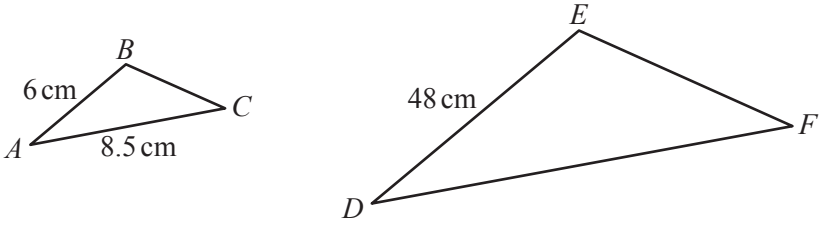

Calculate DF.

$DF =$ ..... cm [2]

© UCLES 2019

8 **(a)** **(i)** Complete the table of values for $y = x^2 - 2x$.

View solution

x	–2	–1	0	1	2	3	4
y	8		0	–1	0		8

[1]

(ii) On the grid, draw the graph of $y = x^2 - 2x$ for $-2 \leqslant x \leqslant 4$.

View solution

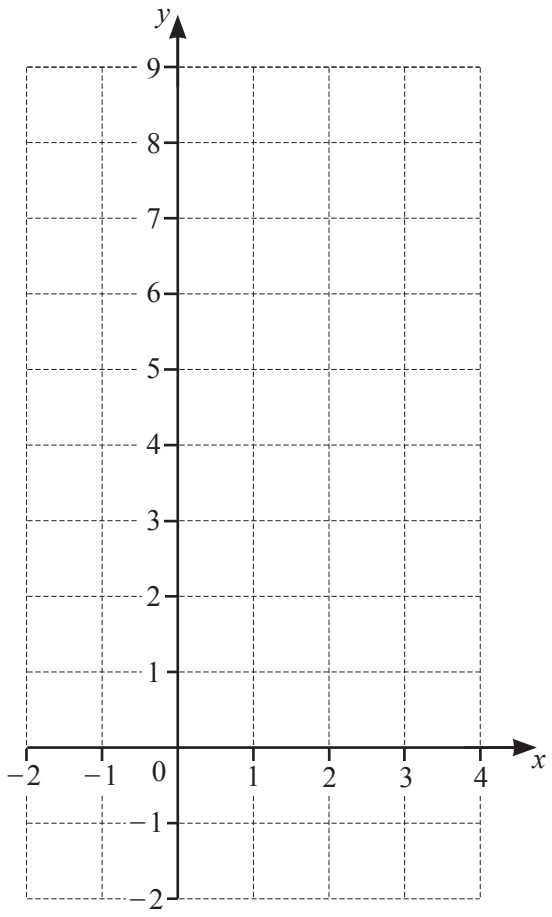

[4]

(b) Here are the first four terms of a sequence.

View solution

3 9 15 21

(i) Find the next term.

..... [1]

(ii) Write down the rule for continuing this sequence.

View solution

..... [1]

(iii) Find the *n*th term of this sequence.

View solution

..... [2]

Question 9 is printed on the next page.

9 **(a)** By rounding each number correct to 1 significant figure, show that an estimate for this calculation is 20.

View solution

$$\frac{9.78 + 31.562}{0.381 \times 5.09}$$

[2]

(b) Write these numbers in order, smallest first.

View solution

$$\frac{22}{7} \qquad 3.142 \qquad \frac{333}{106} \qquad 3.1416$$

..... < ..... < ..... < ..... [2]

smallest

(c) The length, p cm, of a pencil is 9.8 cm, correct to 2 significant figures.

View solution

Complete the statement about the value of p.

..... $\leqslant p <$ ..... [2]

(d) Calculate $3.142 - \frac{52\,163}{16\,604}$.

View solution

Give your answer in standard form correct to 2 significant figures.

..... [2]

Permission to reproduce items where third-party owned material protected by copyright is included has been sought and cleared where possible. Every reasonable effort has been made by the publisher (UCLES) to trace copyright holders, but if any items requiring clearance have unwittingly been included, the publisher will be pleased to make amends at the earliest possible opportunity.

To avoid the issue of disclosure of answer-related information to candidates, all copyright acknowledgements are reproduced online in the Cambridge Assessment International Education Copyright Acknowledgements Booklet. This is produced for each series of examinations and is freely available to download at www.cambridgeinternational.org after the live examination series.

Cambridge Assessment International Education is part of the Cambridge Assessment Group. Cambridge Assessment is the brand name of the University of Cambridge Local Examinations Syndicate (UCLES), which itself is a department of the University of Cambridge.

© UCLES 2019