Cambridge Assessment International Education

Cambridge IGCSE™

CANDIDATE NAME									
CENTRE NUMBER						CANDIDATE NUMBER				

MATHEMATICS **0580/21**

Paper 2 (Extended) **October/November 2020**

1 hour 30 minutes

You must answer on the question paper.

You will need: Geometrical instruments

INSTRUCTIONS
- Answer **all** questions.
- Use a black or dark blue pen. You may use an HB pencil for any diagrams or graphs.
- Write your name, centre number and candidate number in the boxes at the top of the page.
- Write your answer to each question in the space provided.
- Do **not** use an erasable pen or correction fluid.
- Do **not** write on any bar codes.
- You should use a calculator where appropriate.
- You may use tracing paper.
- You must show all necessary working clearly.
- Give non-exact numerical answers correct to 3 significant figures, or 1 decimal place for angles in degrees, unless a different level of accuracy is specified in the question.
- For π, use either your calculator value or 3.142.

INFORMATION
- The total mark for this paper is 70.
- The number of marks for each question or part question is shown in brackets [ ].

1 Simplify.

$3a + 7b - 4a + b$

View solution

..... [2]

View solution

2 A field, ABC, is in the shape of a triangle.
$AC = 500\,\text{m}$ and $BC = 650\,\text{m}$.

Using a ruler and compasses only, complete the scale drawing of the field ABC.
Leave in your construction arcs.
Use a scale of 1 cm to represent 100 m.
The side AB has been drawn for you.



Scale: 1 cm to 100 m

[3]

View solution

3 Rangan buys 3.6 kg of potatoes and 2.8 kg of leeks.
The total cost is \$13.72 .
Leeks cost \$2.65 per kilogram.

Find the cost of 1 kg of potatoes.

\$ ..... [3]

© UCLES 2020

4 Aisha records the distance she runs and her average speed.
The results are shown in the scatter diagram.

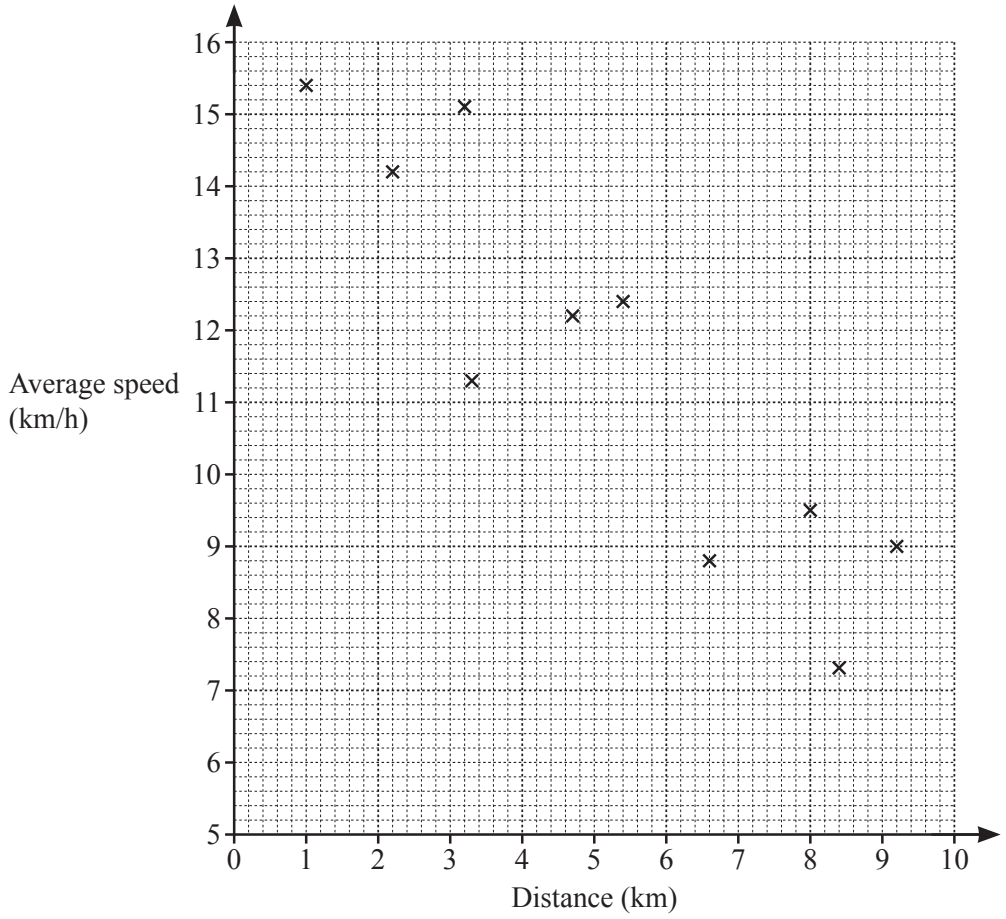

(a) The table shows the results of four more runs.

Distance (km)	4.2	5.7	7.1	8.8
Average speed (km/h)	13.4	11.8	9.8	8.3

On the scatter diagram, plot these points. [2]

(b) What type of correlation is shown in the scatter diagram?

..... [1]

(c) On the scatter diagram, draw a line of best fit. [1]

(d) Use your line of best fit to estimate her average speed when she runs a distance of 6 km.

..... km/h [1]

View solution
View solution
View solution
View solution

5 $T = \dfrac{49.2 - 9.59}{4.085 \times 2.35}$

View solution

By writing each number correct to 1 significant figure, work out an estimate for T.
You must show all your working.

..... [2]

6 **Without using a calculator**, work out $2\frac{2}{3} \times 2\frac{3}{4}$.

View solution

You must show all your working and give your answer as a mixed number in its simplest form.

..... [3]

7 Make x the subject of this formula.

View solution

$$2y = 5x - 7$$

$x =$ ..... [2]

© UCLES 2020

8 **(a)** 1, 2, 3, 5 and 7 are all common factors of two numbers.

Write down the digit that the two numbers must end in.

View solution

..... [1]

(b) Write 84 as a product of its prime factors.

View solution

..... [2]

9 **(a)** Ahmed increases 40 by 300%.

View solution

From this list, put a ring around the correct calculation.

40×1.300 40×3 40×400 40×4 40×300

[1]

(b) Ahmed finds the magnitude of the vector $\begin{pmatrix} 2 \\ -3 \end{pmatrix}$.

View solution

From this list, put a ring around the correct calculation.

$\sqrt{2^2 + -3^2}$ $2^2 - 3^2$ $\sqrt{2^2 - 3^2}$ $2^2 + (-3)^2$ $\sqrt{2^2 + (-3)^2}$

[1]

10 A town has a population of 45 000.
This population increases exponentially at a rate of 1.6% per year.

View solution

Find the population of the town at the end of 5 years.
Give your answer correct to the nearest hundred.

..... [3]

© UCLES 2020

11

View solution

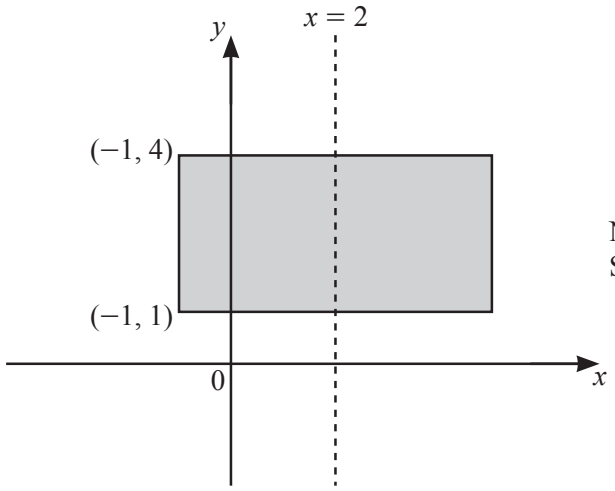

The diagram shows a rectangle with a line of symmetry at $x = 2$.
Two vertices of the rectangle are at $(-1, 1)$ and $(-1, 4)$.

The shaded region is defined by the inequalities $a \leqslant x \leqslant b$ and $c \leqslant y \leqslant d$.

Find the values of a, b, c and d.

$a =$ .....

$b =$ .....

$c =$ .....

$d =$ ..... [2]

12 The interior angle of a regular polygon with n sides is 156°.

View solution

Work out the value of n.

$n =$ ..... [2]

13 Write the recurring decimal $0.1\dot{7}$ as a fraction in its simplest form.
You must show all your working.

View solution

..... [3]

© UCLES 2020

14 Find the gradient of a line that is perpendicular to $8y + 4x = 5$.

View solution

..... [2]

15

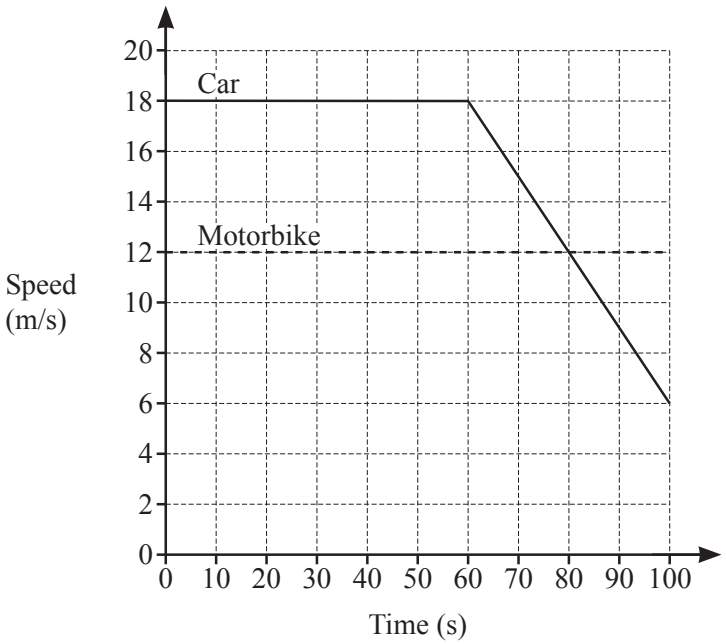

The diagram shows the speed–time graph for 100 seconds of the journey of a car and of a motorbike.

(a) Find the deceleration of the car between 60 and 100 seconds.

View solution

..... m/s^2 [1]

(b) Calculate how much further the car travelled than the motorbike during the 100 seconds.

View solution

..... m [3]

© UCLES 2020

16 Factorise $6x^2 + 7x - 20$.

View solution

..... [2]

17 **(a)** $f(x) = 3x^2 + a$ where a is an integer.
$f(-2) = 19$

Find the value of a.

View solution

$a =$ ..... [2]

(b) $g(x) = 2x + 7$ $h(x) = 3x - 8$

View solution

(i) Find $gh(x)$ in its simplest form.

..... [2]

(ii) Find $g^{-1}(x)$.

View solution

$g^{-1}(x) =$ ..... [2]

© UCLES 2020

18

View solution

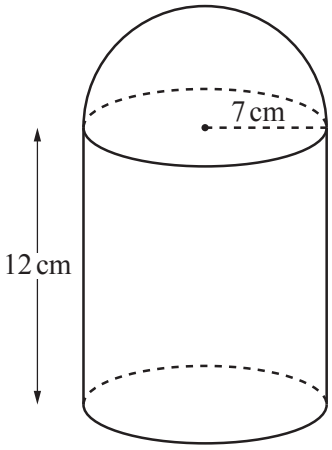

NOT TO SCALE

The diagram shows a solid made from a cylinder and a hemisphere, both of radius 7 cm.
The cylinder has length 12 cm.

Work out the total surface area of the solid.
[The surface area, A, of a sphere with radius r is $A = 4\pi r^2$.]

..... cm^2 [4]

19 In this Venn diagram, shade the region $M' \cup N \cup P$.

View solution

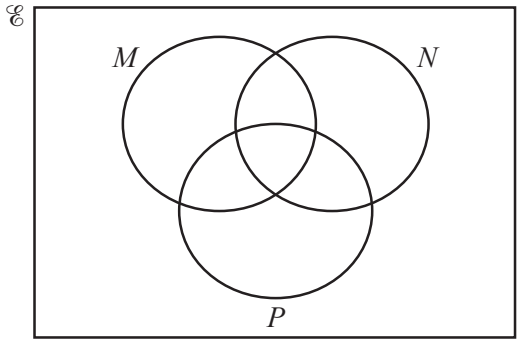

[1]

20

View solution

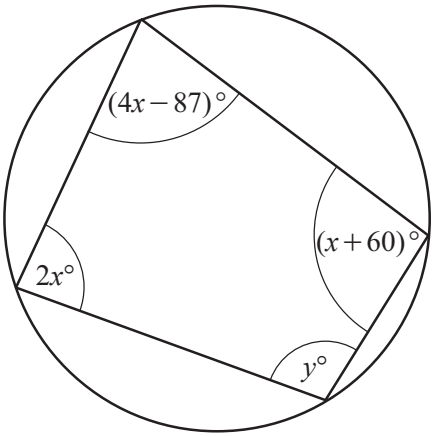

NOT TO SCALE

The diagram shows a cyclic quadrilateral.

Find the value of y.

$y =$ ..... [4]

© UCLES 2020

21

View solution

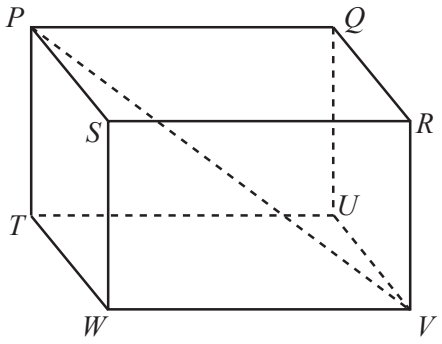

NOT TO SCALE

The diagram shows a cuboid $PQRSTUVW$.
$PV = 17.2\,\text{cm}$
The angle between the line PV and the base $TUVW$ of the cuboid is 43°.

Calculate PT.

$PT =$ ..... cm [3]

22 Simplify.

View solution

$$\frac{x^2 - 5x}{2x^2 - 50}$$

..... [4]

Question 23 is printed on the next page.

© UCLES 2020

23 (a)

View solution

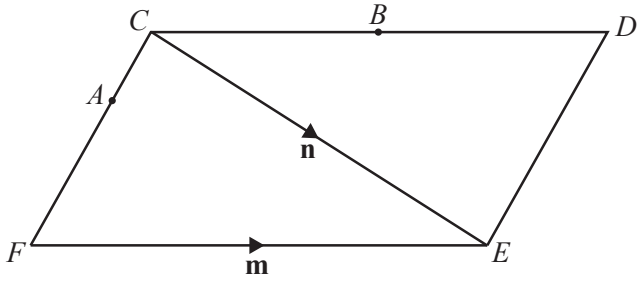

NOT TO SCALE

The diagram shows a parallelogram $CDEF$.
$\overrightarrow{FE} = \mathbf{m}$ and $\overrightarrow{CE} = \mathbf{n}$.
B is the midpoint of CD.
$FA = 2AC$

Find an expression, in terms of **m** and **n**, for $\overrightarrow{AB}$.
Give your answer in its simplest form.

$\overrightarrow{AB} =$ ..... [3]

(b) $\overrightarrow{GH} = \frac{5}{6}(2\mathbf{p} + \mathbf{q})$ $\overrightarrow{JK} = \frac{5}{18}(2\mathbf{p} + \mathbf{q})$

View solution

Write down **two** facts about vectors $\overrightarrow{GH}$ and $\overrightarrow{JK}$.

.....

..... [2]

Permission to reproduce items where third-party owned material protected by copyright is included has been sought and cleared where possible. Every reasonable effort has been made by the publisher (UCLES) to trace copyright holders, but if any items requiring clearance have unwittingly been included, the publisher will be pleased to make amends at the earliest possible opportunity.

To avoid the issue of disclosure of answer-related information to candidates, all copyright acknowledgements are reproduced online in the Cambridge Assessment International Education Copyright Acknowledgements Booklet. This is produced for each series of examinations and is freely available to download at www.cambridgeinternational.org after the live examination series.

Cambridge Assessment International Education is part of the Cambridge Assessment Group. Cambridge Assessment is the brand name of the University of Cambridge Local Examinations Syndicate (UCLES), which itself is a department of the University of Cambridge.

© UCLES 2020