Cambridge Assessment International Education

Cambridge IGCSE™

CANDIDATE NAME									
CENTRE NUMBER						CANDIDATE NUMBER				

MATHEMATICS **0580/31**

Paper 3 (Core) **October/November 2021**

2 hours

You must answer on the question paper.

You will need: Geometrical instruments

INSTRUCTIONS

- Answer **all** questions.
- Use a black or dark blue pen. You may use an HB pencil for any diagrams or graphs.
- Write your name, centre number and candidate number in the boxes at the top of the page.
- Write your answer to each question in the space provided.
- Do **not** use an erasable pen or correction fluid.
- Do **not** write on any bar codes.
- You should use a calculator where appropriate.
- You may use tracing paper.
- You must show all necessary working clearly.
- Give non-exact numerical answers correct to 3 significant figures, or 1 decimal place for angles in degrees, unless a different level of accuracy is specified in the question.
- For π, use either your calculator value or 3.142.

INFORMATION

- The total mark for this paper is 104.
- The number of marks for each question or part question is shown in brackets [ ].

This document has **20** pages. Any blank pages are indicated.

© UCLES 2021

1 **(a)** 14 17 25 27 30 36 48

View solution

From the list, write down

(i) the square root of 289,

..... [1]

(ii) a factor of 81,

View solution

..... [1]

(iii) a common multiple of 3 and 5.

View solution

..... [1]

(b) A, B and C are three **consecutive** whole numbers.

View solution

- A is a prime number.
- B is a cube number.
- C is a square number.
- A + B + C is less than 40.

Find A, B and C.

A = ...

B = ...

C = ... [2]

(c) Put **one** pair of brackets into each of these calculations to make them correct.

(i) $4 \times 3 + 7 \div 2 = 20$

[1]

(ii) $51 - 12 \div 3 + 6 = 19$

[1]

(d) Write down

(i) the reciprocal of 8,

..... [1]

(ii) the value of 14^0.

..... [1]

(e) Calculate.

(i) 5^4

..... [1]

(ii) $\sqrt[3]{6859}$

..... [1]

(iii) $16^{-\frac{1}{2}}$

..... [1]

© UCLES 2021

2 **(a)** In one year, a theatre sells four hundred and ninety-six thousand and fifty tickets.

Write this number in figures.

View solution

..... [1]

(b) The theatre is used for performances of operas, plays, concerts and musicals.
The pie chart shows information about the number of each type of performance.

View solution

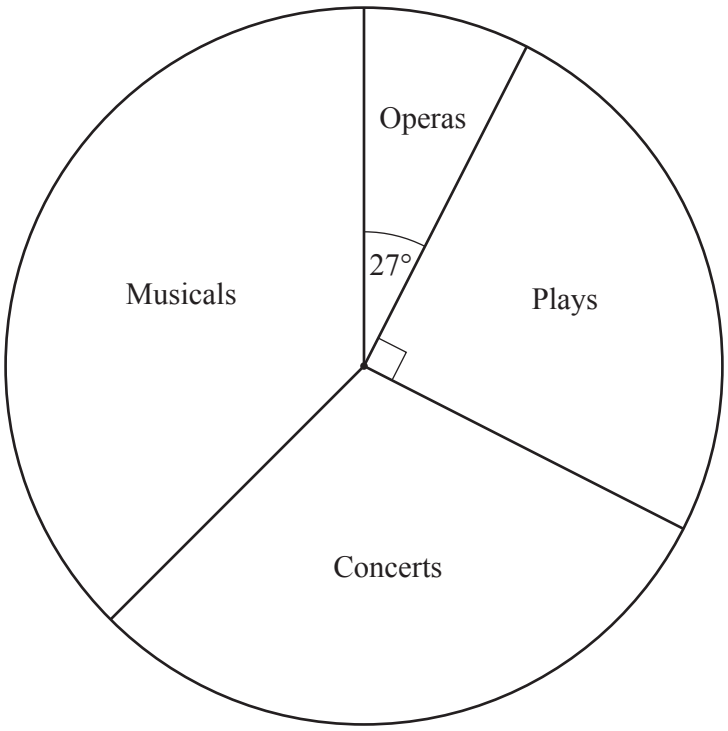

(i) Complete these statements.

The type of performance shown the most is ..... .

The sector angle for this type of performance is ..... degrees. [2]

(ii) Write down the percentage of performances that are plays.

View solution

..... % [1]

(iii) The theatre is used for 320 performances in the year.

View solution

Calculate the number of opera performances.

..... [2]

© UCLES 2021

(iv) The number of concert performances is in the ratio classical music : popular music = 7 : 5.
There are 56 classical music concerts.

Find the number of popular music concerts.

View solution

..... [2]

(c) The table shows the prices of a child ticket and a senior ticket for a play.

View solution

Adult	Child	Senior
$	$15.50	$35

Alex buys tickets for 2 adults, 3 children and 1 senior.
He pays a total of $159.50 .

Complete the table.

[2]

(d) Last week the cost of a ticket for a musical was $65.
This week the same ticket costs $55.90 .

View solution

Find the percentage reduction in the cost of this ticket.

..... % [2]

© UCLES 2021

3 360 people go on a school trip to one of four places.
Some of the information is shown in the table.

	Adventure park	Botanic gardens	Wildlife centre	Red castle	Total
Boys	65	12		36	
Girls		9	62		163
Staff	15	3			37
Total	144	24	121	71	360


View solution

(a) Complete the table.

[3]


View solution

(b) Find the probability that

(i) a girl, picked at random, visits the Wildlife centre,

..... [1]

(ii) a person, picked at random from those visiting the Botanic gardens, is a girl,


View solution

..... [1]

(iii) a person, picked at random, visits the Adventure park or the Botanic gardens.


View solution

..... [1]

(c) The people who visit the Adventure park travel by coach.
Each coach has 52 seats for passengers.


View solution

Complete this statement.

The least number of coaches needed for the trip to the Adventure park is ..... and there will be a total of ..... empty seats.

[2]

© UCLES 2021

(d) The school hires one coach from each of two different companies for the trip to Red castle.

View solution

A coach from Fast Track coaches costs \$600 plus \$0.72 per kilometre travelled.
The total cost, in dollars, for travelling x kilometres is $600 + 0.72x$.

(i) A coach from Rapid coaches costs \$550 plus \$1.12 per kilometre travelled.

Write an expression for the total cost, in dollars, for travelling x kilometres.

..... [1]

(ii) Both companies charge the same amount for the trip.

View solution

Write down an equation and solve it to find the distance travelled.

..... km [3]

(e) The length, l km, of the journey to the Wildlife centre is 53 km, correct to the nearest kilometre.

View solution

Complete this statement about the value of l.

..... $\leqslant l <$ ..... [2]

(f) Samira takes \$31.50 to spend in the Botanic gardens.

View solution

(i) She spends $\frac{2}{7}$ of this money on food.

Work out how much Samira spends on food.

\$ ..... [1]

(ii) At the end of the visit to the Botanic gardens, Samira has \$4.50 left.

View solution

What fraction of her money does Samira spend?
Give your answer in its simplest form.

..... [2]

© UCLES 2021

4 **(a)**

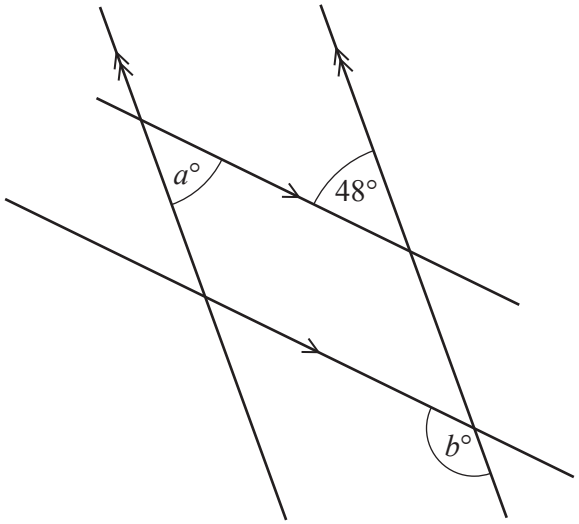

NOT TO SCALE

The diagram shows two pairs of parallel lines.

(i) Find the value of a.

$a =$ ..... [1]

(ii) Find the value of b.

$b =$ ..... [1]

(b)

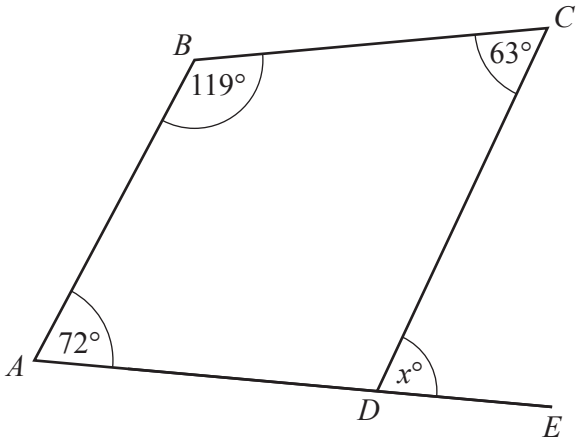

NOT TO SCALE

The diagram shows a quadrilateral $ABCD$ and a straight line ADE.

Work out the value of x.

$x =$ ..... [2]

(c)

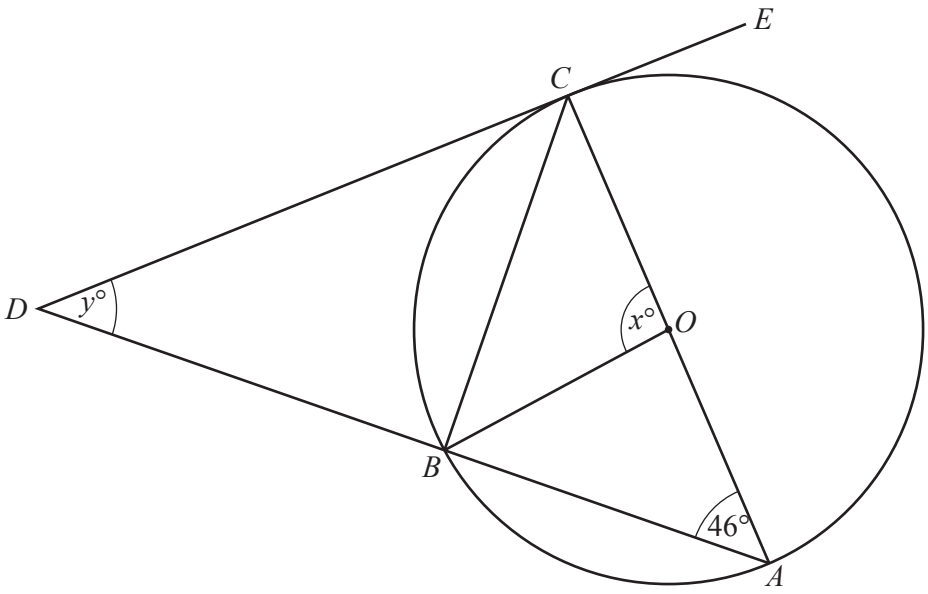

NOT TO SCALE

View solution

A, B and C are points on the circle, centre O.
AC is a diameter of the circle and ABD is a straight line.
DCE is a tangent to the circle at C.

(i) Write down the mathematical name for the line BC.

..... [1]

(ii) Explain why angle ABC is 90°.

View solution

..... [1]

(iii) Find the value of x.

View solution

$x =$ ..... [2]

(iv) Find the value of y.

View solution

$y =$ ..... [2]

5 11 students record the time they spent on social media and watching television during one week. The table shows the time, in hours, for each student.

Social media (hours)	2	9	18	6	28	14	7.5	27	22	19.5	13
Television (hours)	25	23	18.5	27.5	12	16	17	9	15	11	20

(a) Find the range of the times spent on social media.

View solution

..... hours [1]

(b) (i) Complete the scatter diagram.
The first nine points have been plotted for you.

View solution

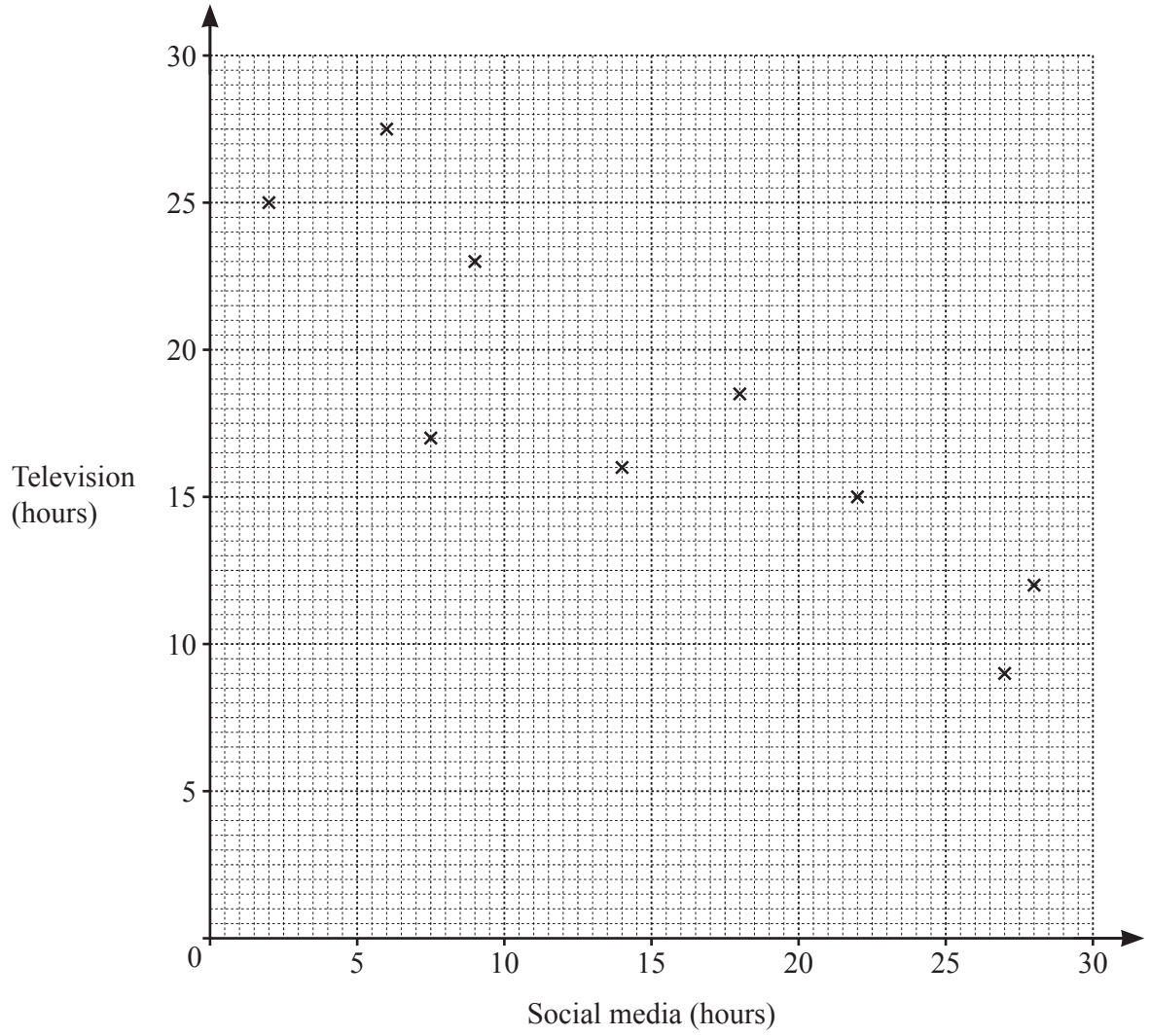

[1]

(ii) What type of correlation is shown on the scatter diagram?

..... [1]

(iii) Draw a line of best fit on the scatter diagram. [1]

(iv) Another student spent 21 hours watching television.

Use your line of best fit to estimate the number of hours this student spent on social media.

..... hours [1]

© UCLES 2021

6 **(a)** The diagram shows the travel graph of a train journey from Wengen to Kleine Scheidegg.

View solution

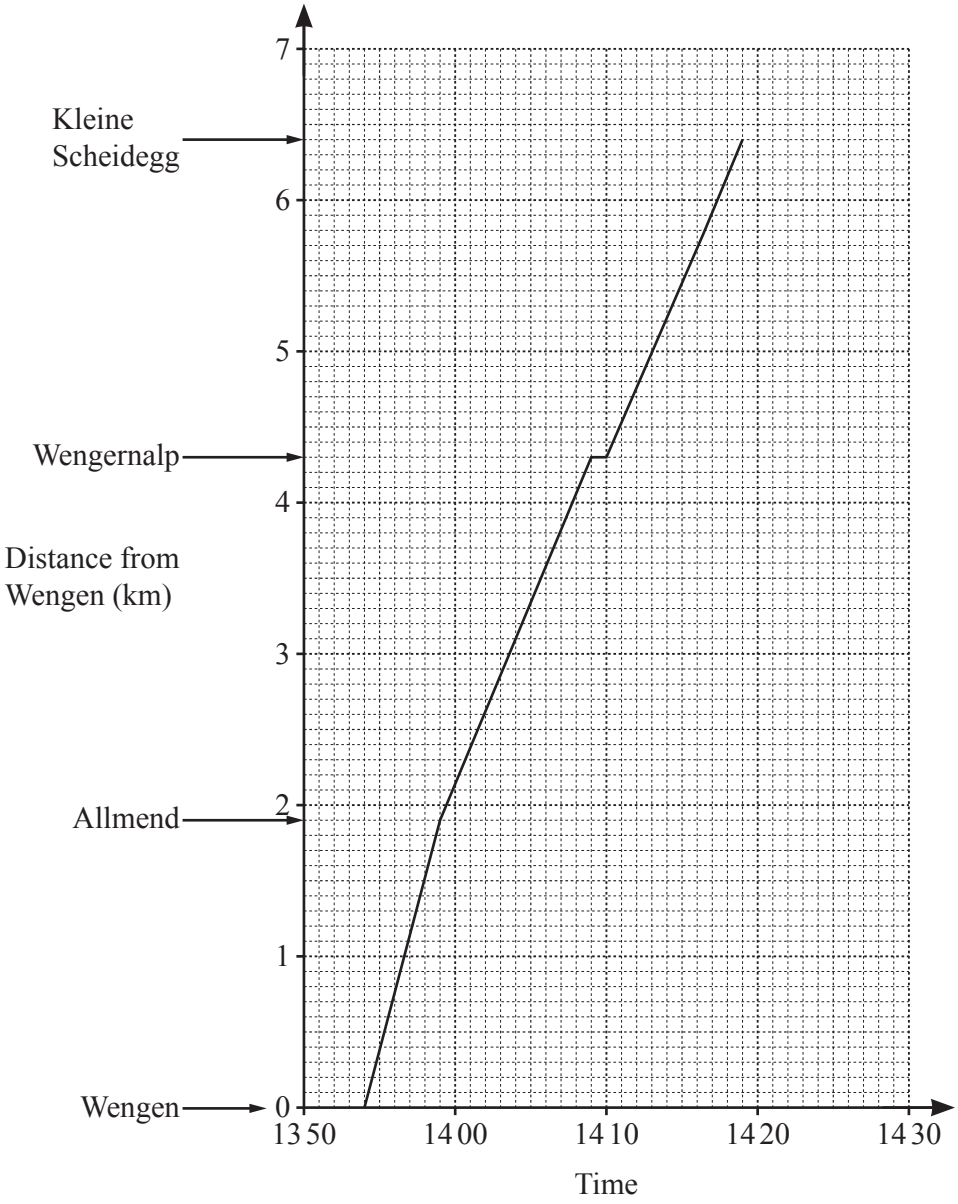

(i) Explain what happens between 14 09 and 14 10.

..... [1]

(ii) Find the journey time from Allmend to Wengernalp in minutes.

View solution

..... min [1]

(iii) Calculate the average speed for the train journey from Wengen to Kleine Scheidegg. Give your answer in km/h.

View solution

..... km/h [3]

© UCLES 2021

(iv) Another train travels from Kleine Scheidegg to Wengen.
The table gives information about its journey.

View solution

Station	Arrival time	Departure time
Kleine Scheidegg		1401
Wengernalp	Train does not stop	
Allmend	1418	1420
Wengen	1430	

On the travel graph, draw the journey for this train. [3]

(v) Write down the time when the two trains pass each other.

View solution

..... [1]

(b) The temperature in Wengen at 5 am was −3 °C.
At 4 pm the temperature has increased by 10 °C.

View solution

Work out the temperature at 4 pm.

..... °C [1]

(c) A formula to work out the temperature at different heights above Wengen is

View solution

$$T = 2 - \frac{h}{130}$$

where T is the temperature in °C and h is the height, in metres, above Wengen.
Kleine Scheidegg is 780 m above Wengen.

Work out the temperature at Kleine Scheidegg.

..... °C [1]

© UCLES 2021

7 **(a)** The diagram shows the net of a cuboid on a 1 cm^2 grid.

View solution

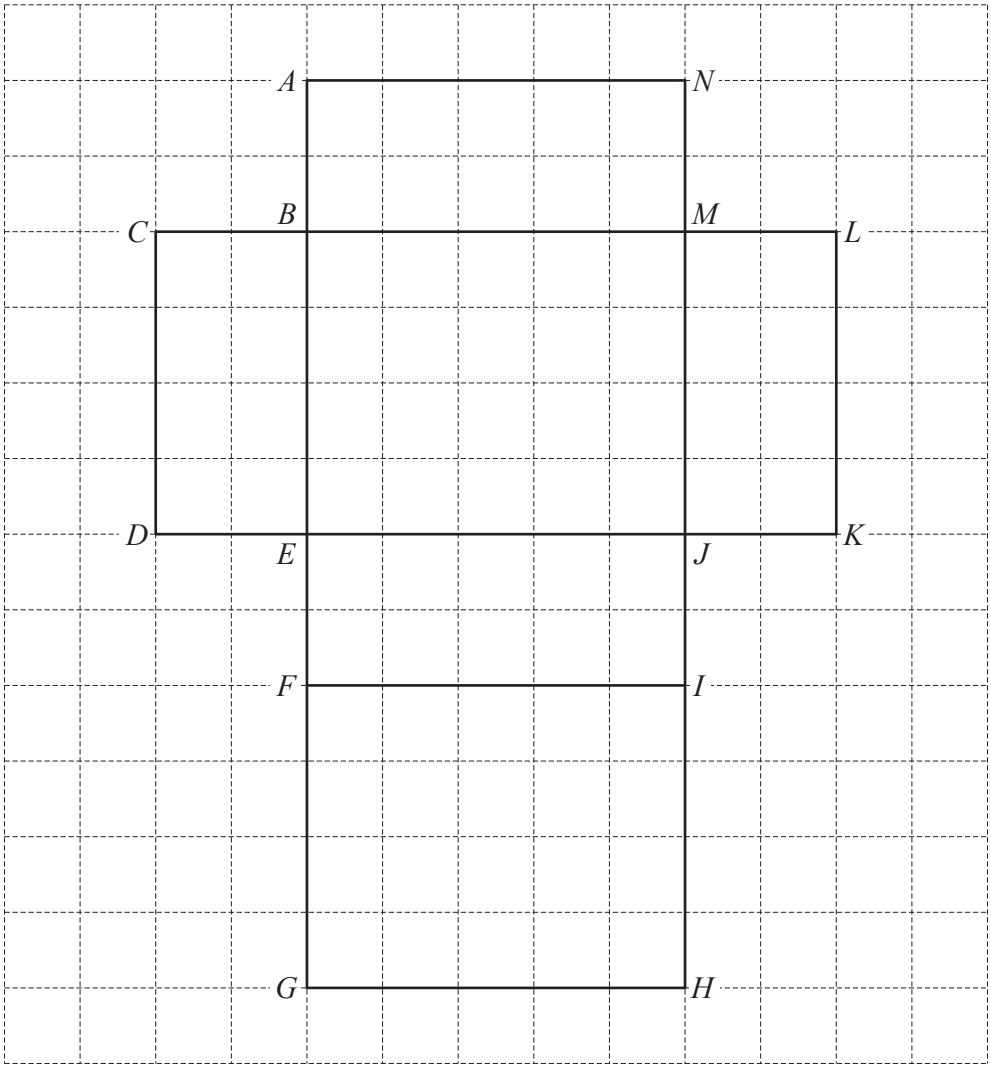

(i) The net is folded to form the cuboid.

(a) Write down which two corners join to corner *A*.

..... [1]

(b) Write down the edge which joins with *KL*.

..... [1]

(ii) Find the total surface area of the cuboid.

View solution

..... cm^2 [2]

(iii) Find the volume of the cuboid.

View solution

..... cm^3 [2]

(b) The diagram shows a cylinder with length L cm.
The radius of the cylinder is 3.2 cm and the volume is 775 cm^3.

View solution

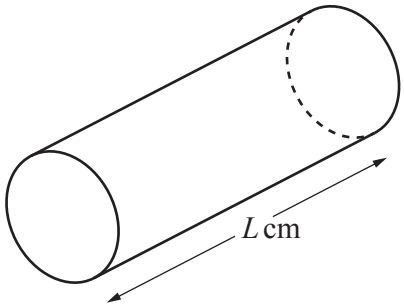

NOT TO SCALE

(i) Calculate the value of L.

$L =$ ..... [3]

(ii) Calculate the volume of a solid sphere with radius 3 cm.
[The volume, V, of a sphere with radius r is $V = \frac{4}{3}\pi r^3$.]

View solution

..... cm^3 [2]

(iii) Four of these spheres are placed inside the cylinder.

Calculate the percentage of the cylinder that is empty.

View solution

..... % [3]

8 (a)

View solution

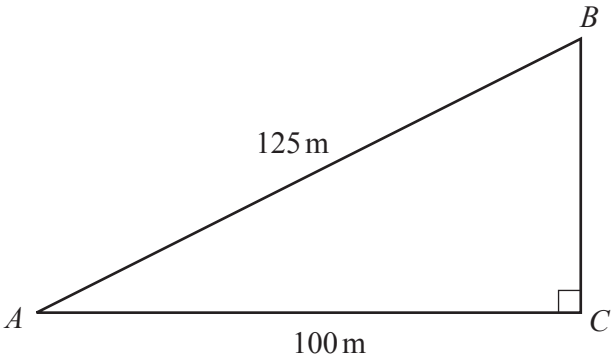

NOT TO SCALE

The diagram shows a right-angled triangle, ABC.

(i) Show that $BC = 75\,\text{m}$.

[2]

(ii) Calculate angle BAC.

View solution

Angle $BAC =$ ..... [2]

(b)

View solution

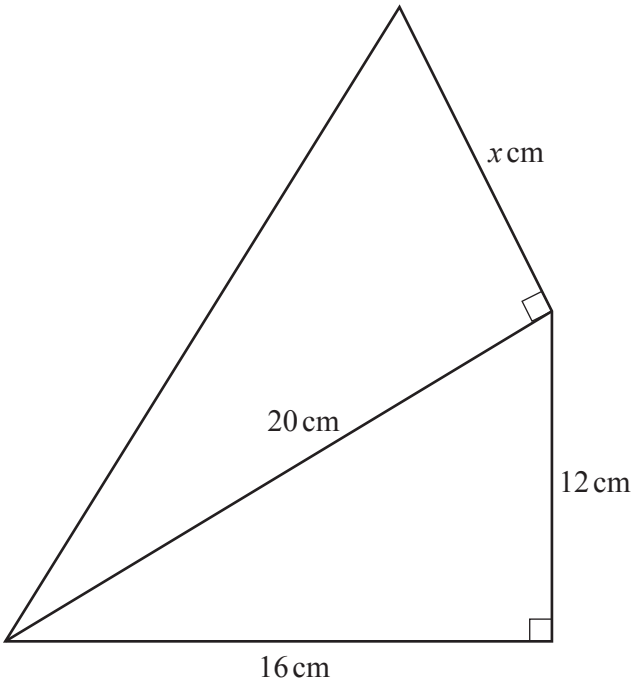

NOT TO SCALE

The diagram shows a shape made from two right-angled triangles.
The total area of this shape is $246\,\text{cm}^2$.

Work out the value of x.

$x =$ ..... [3]

9

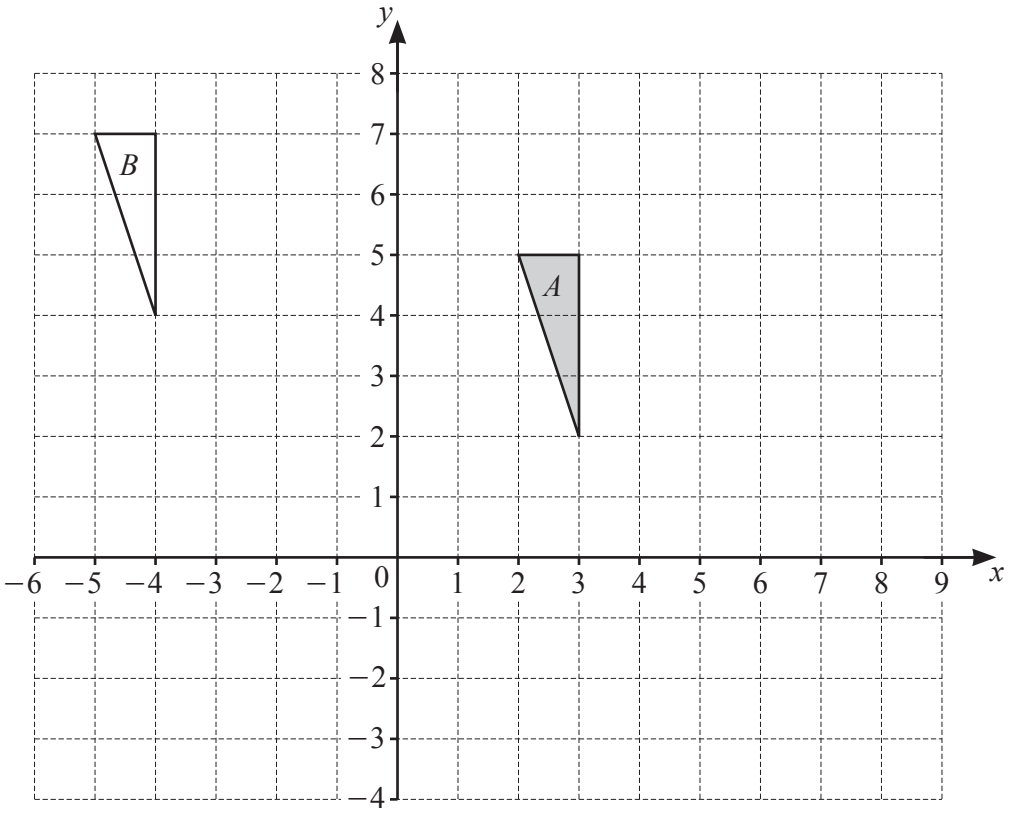

(a) On the grid, draw the image of

View solution

(i) triangle A after a rotation of 90° clockwise about the origin, [2]

(ii) triangle A after a reflection in the line $x = 5$, [2]

(iii) triangle A after an enlargement, scale factor 2, centre (7, 7). [2]

(b) Describe fully the **single** transformation that maps triangle A onto triangle B.

View solution

.....

..... [2]

10 **(a)** Complete the table of values for $y = 4 + 3x - x^2$.

View solution

x	-2	-1	0	1	2	3	4
y		0	4		6		0

[2]

(b) On the grid, draw the graph of $y = 4 + 3x - x^2$ for $-2 \leqslant x \leqslant 4$.

View solution

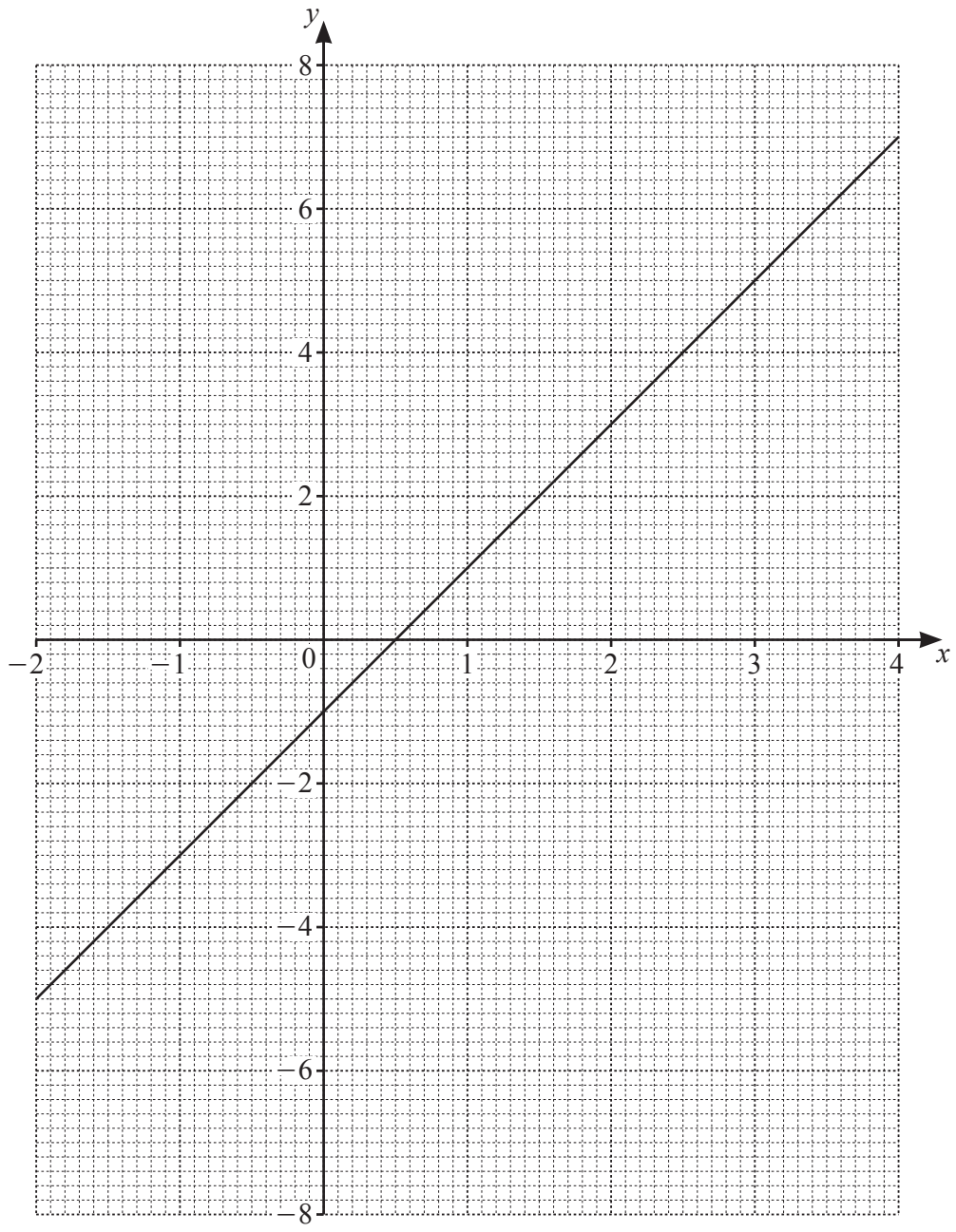

[4]

(c) The line $y = 2x - 1$ is drawn on the grid.

Use your graph to solve the equation $4 + 3x - x^2 = 2x - 1$.

View solution

$x =$ ..... or $x =$ ..... [2]

BLANK PAGE

Permission to reproduce items where third-party owned material protected by copyright is included has been sought and cleared where possible. Every reasonable effort has been made by the publisher (UCLES) to trace copyright holders, but if any items requiring clearance have unwittingly been included, the publisher will be pleased to make amends at the earliest possible opportunity.

To avoid the issue of disclosure of answer-related information to candidates, all copyright acknowledgements are reproduced online in the Cambridge Assessment International Education Copyright Acknowledgements Booklet. This is produced for each series of examinations and is freely available to download at www.cambridgeinternational.org after the live examination series.

Cambridge Assessment International Education is part of the Cambridge Assessment Group. Cambridge Assessment is the brand name of the University of Cambridge Local Examinations Syndicate (UCLES), which itself is a department of the University of Cambridge.

© UCLES 2021