Cambridge Assessment International Education

Cambridge IGCSE™

CANDIDATE NAME									
CENTRE NUMBER						CANDIDATE NUMBER				

MATHEMATICS **0580/41**

Paper 4 (Extended) **October/November 2021**

2 hours 30 minutes

You must answer on the question paper.

You will need: Geometrical instruments

INSTRUCTIONS

- Answer **all** questions.
- Use a black or dark blue pen. You may use an HB pencil for any diagrams or graphs.
- Write your name, centre number and candidate number in the boxes at the top of the page.
- Write your answer to each question in the space provided.
- Do **not** use an erasable pen or correction fluid.
- Do **not** write on any bar codes.
- You should use a calculator where appropriate.
- You may use tracing paper.
- You must show all necessary working clearly.
- Give non-exact numerical answers correct to 3 significant figures, or 1 decimal place for angles in degrees, unless a different level of accuracy is specified in the question.
- For π, use either your calculator value or 3.142.

INFORMATION

- The total mark for this paper is 130.
- The number of marks for each question or part question is shown in brackets [ ].

This document has **20** pages. Any blank pages are indicated.

© UCLES 2021

1 (a)

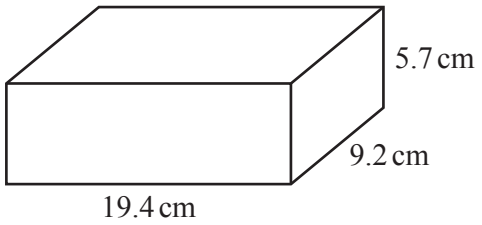

NOT TO SCALE

View solution

The diagram shows a brick in the shape of a cuboid.

(i) Calculate the total surface area of the brick.

..... cm^2 [3]

(ii) The density of the brick is $1.9\,g/cm^3$.

View solution

Work out the mass of the brick.
Give your answer in kilograms.
[Density = mass ÷ volume]

..... kg [3]

(b) 9000 bricks are needed to build a house.
200 bricks cost $175.

View solution

Work out the cost of the bricks needed to build 5 houses.

$ ..... [3]

(c) Saskia builds a wall using 1500 bricks.
She can build at the rate of 40 bricks each hour.
She works for 9 hours each day.
Saskia starts work on 6 July and works every day until the wall is completed.

Find the date when she completes the wall.

View solution

..... [3]

(d) Rafa has a cylindrical tank.
The cylinder has a height of 105 cm and a diameter of 45 cm.

Calculate the capacity of the tank in litres.

View solution

..... litres [3]

2 Bob, Chao and Mei take part in a run for charity.

(a) Their times to complete the run are in the ratio Bob : Chao : Mei = 4 : 5 : 7.

View solution

(i) Find Chao's time as a percentage of Mei's time.

..... % [1]

(ii) Bob's time for the run is 55 minutes 40 seconds.

View solution

Find Mei's time for the run.
Give your answer in minutes and seconds.

..... min ..... s [3]

(b) Chao collects $47.50 for charity.

View solution

(i) Bob collects 28% more than Chao.

Find the amount Bob collects.

$ ..... [2]

(ii) Chao collects 60% less than Mei.

View solution

Find how much more money Mei collects than Chao.

$ ..... [3]

© UCLES 2021

(c) When running, Chao has a stride length of 70 cm, correct to the nearest 5 cm.
Chao runs a distance of 11.2 km, correct to the nearest 0.1 km.

View solution

Work out the minimum number of strides that Chao could take to complete this distance.

..... [4]

(d) In 2015, a charity raised a total of $1.6 million.
After 2015, this amount increased exponentially by 2.4% each year for the next 5 years.

View solution

Work out the amount raised by the charity in 2020.

$ ..... million [2]

3 The cumulative frequency diagram shows information about the mass, m kg, of each of 80 boys.

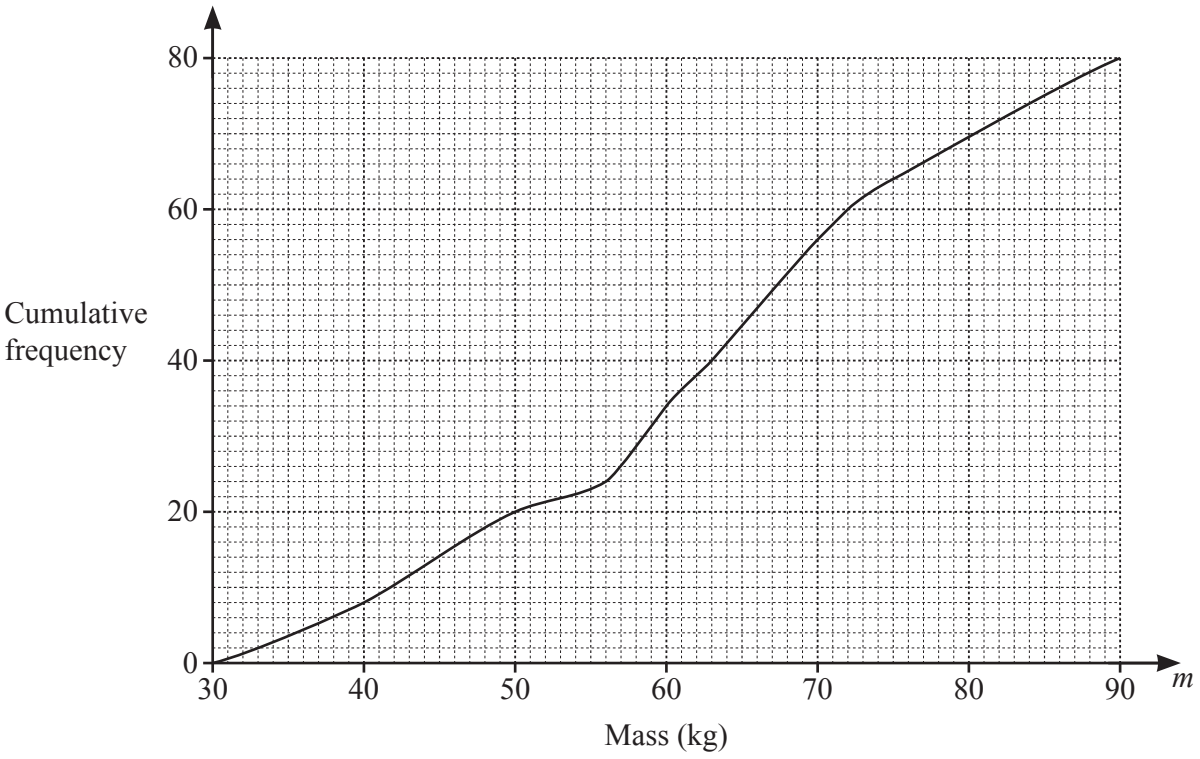

(a)

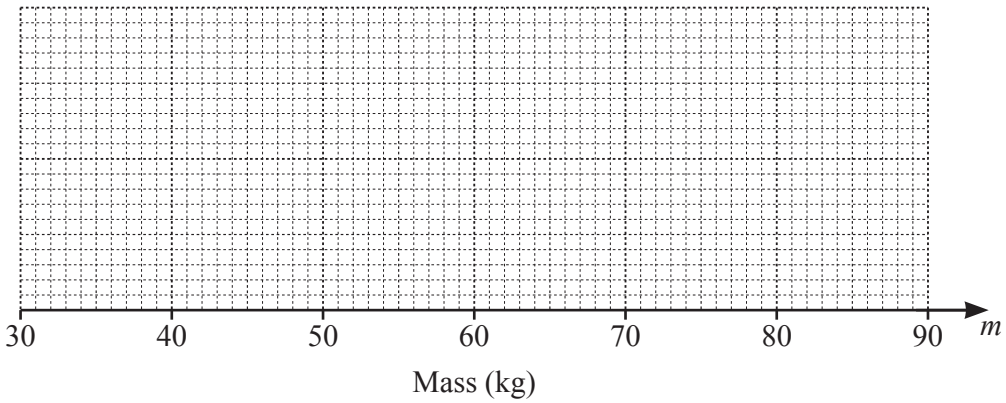

On the grid, draw a box-and-whisker plot to show the information in the cumulative frequency diagram. [4]

(b) Use the cumulative frequency diagram to find an estimate of

(i) the 30th percentile,

..... kg [2]

(ii) the number of boys with a mass greater than 75 kg.

..... [2]

(c) (i) Use the cumulative frequency diagram to complete this frequency table.

Mass (m kg)	$30 < m \leqslant 40$	$40 < m \leqslant 50$	$50 < m \leqslant 60$	$60 < m \leqslant 70$	$70 < m \leqslant 80$	$80 < m \leqslant 90$
Frequency	8	12			14	10

[1]

(ii) Calculate an estimate of the mean mass of the boys.

View solution

..... kg [4]

(iii) Two boys are chosen at random from those with a mass greater than 70 kg.

Find the probability that one of them has a mass greater than 80 kg and the other has a mass of 80 kg or less.

..... [3]

© UCLES 2021

4 **(a)** Solve.

(i) $6(7-2x) = 3x-8$

View solution

$x =$ ..... [3]

(ii) $\frac{2x}{x-5} = \frac{2}{3}$

View solution

$x =$ ..... [3]

(b) Factorise completely.

(i) $2x^2 - 288y^2$

View solution

..... [3]

(ii) $5x^2 + 17x - 40$

View solution

..... [2]

(c) Solve $x^3 + 4x^2 - 17x = x^3 - 9$.
You must show all your working and give your answers correct to 2 decimal places.

View solution

$x =$ ..... or $x =$ ..... [5]

5 (a)

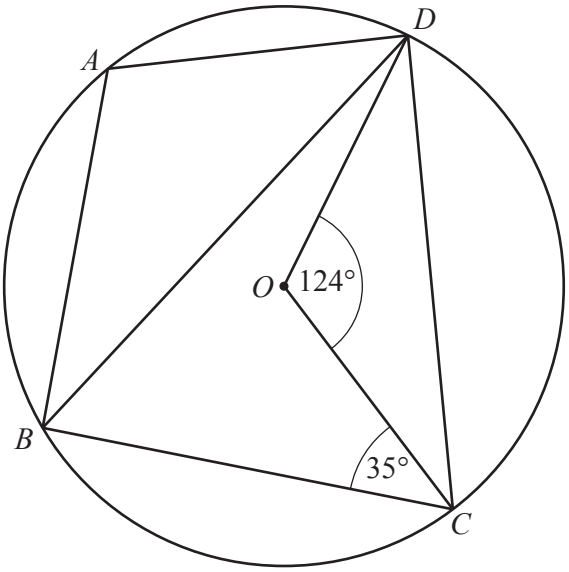

NOT TO SCALE

A, B, C and D are points on a circle, centre O.
Angle $COD = 124°$ and angle $BCO = 35°$.

(i) Work out angle CBD.
Give a geometrical reason for your answer.

Angle CBD = ... because .....

..... [2]

(ii) Work out angle BAD.
Give a geometrical reason for each step of your working.

Angle BAD = ... because .....

.....

..... [4]

(b)

View solution

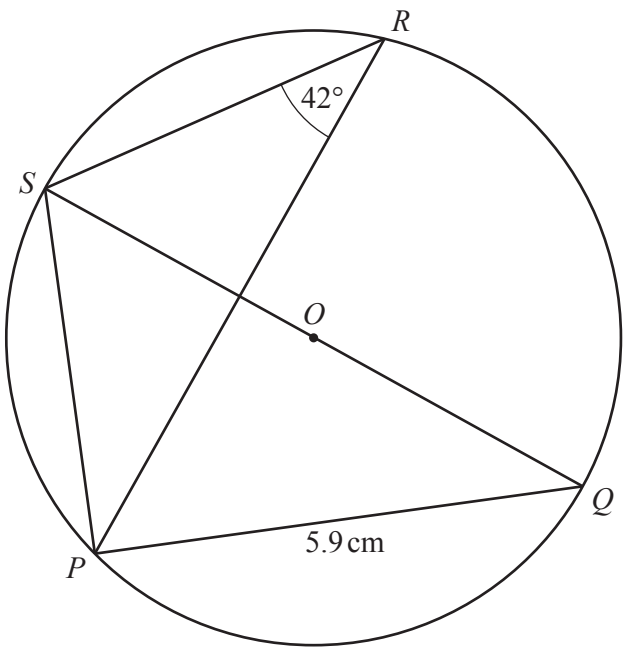

NOT TO SCALE

P, Q, R and S are points on a circle, centre O.
QS is a diameter.
Angle $PRS = 42°$ and $PQ = 5.9$ cm.

Calculate the circumference of the circle.

..... cm [5]

6 The table shows some values for $y = x^2 - \frac{3}{2x}$, $x \neq 0$, given correct to 1 decimal place.

x	−3	−2	−1	−0.5	−0.2		0.2	0.5	1	2	3
y			2.5	3.3	7.5		−7.5	−2.8	−0.5	3.3	

(a) (i) Complete the table. [3]

(ii) On the grid, draw the graph of $y = x^2 - \frac{3}{2x}$ for $-3 \leqslant x \leqslant -0.2$ and $0.2 \leqslant x \leqslant 3$.

View solution

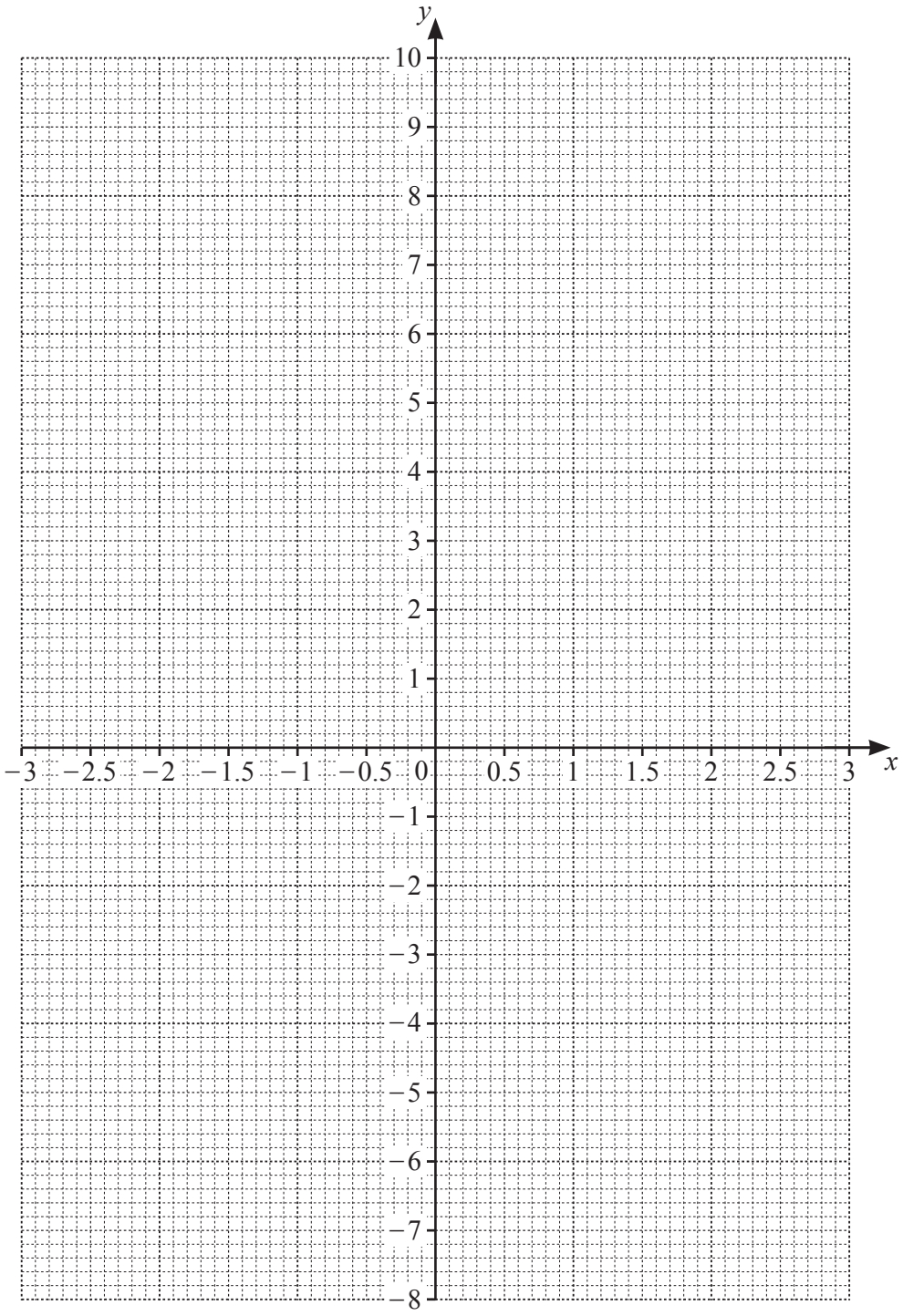

[5]

© UCLES 2021

(b) By drawing a suitable straight line on the grid, solve the equation $x^2 - \frac{3}{2x} = \frac{24}{5} - 2x$ for $-3 \leqslant x \leqslant -0.2$ and $0.2 \leqslant x \leqslant 3$.

View solution

$x =$ ..... or $x =$ ..... [4]

(c) The solutions to the equation $x^2 - \frac{3}{2x} = \frac{24}{5} - 2x$ are also the solutions to an equation of the form $ax^3 + bx^2 + cx - 15 = 0$ where a, b and c are integers.

View solution

Find the values of a, b and c.

$a =$ .....

$b =$ .....

$c =$ ..... [4]

© UCLES 2021

7 (a)

View solution

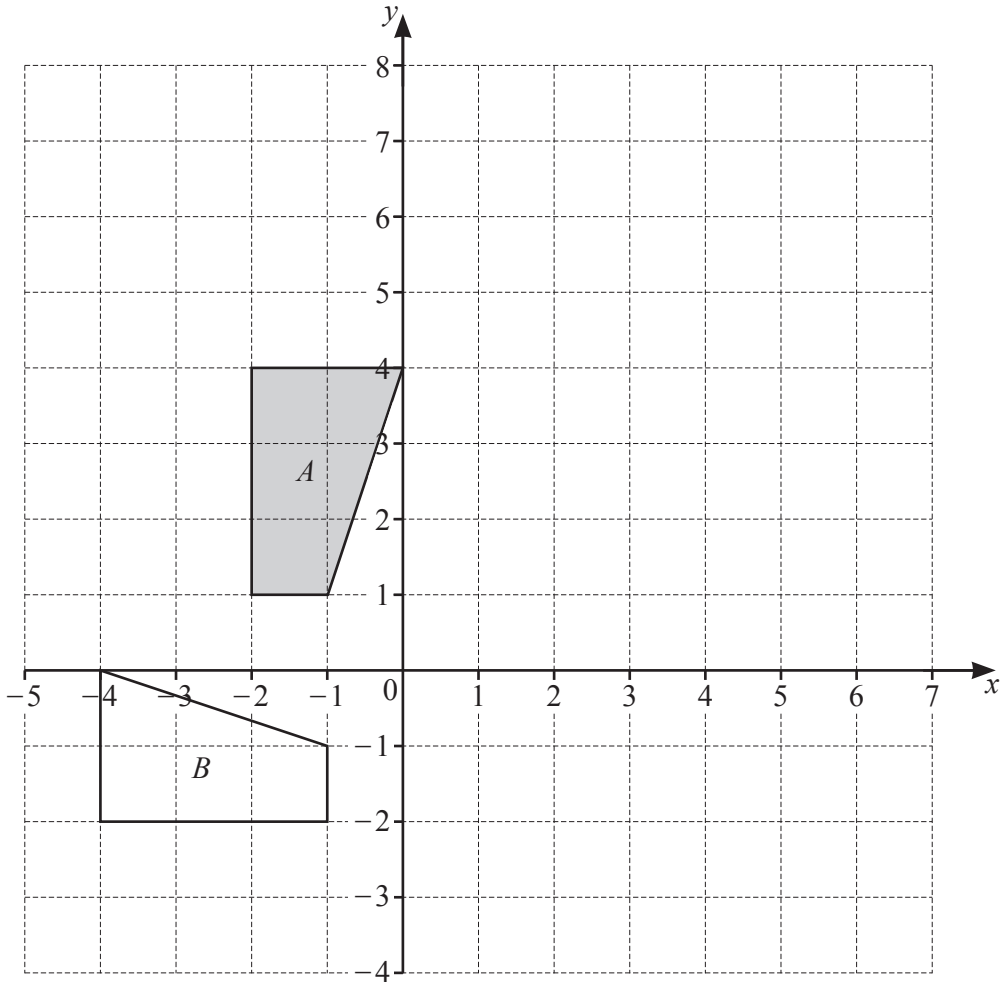

(i) On the grid, draw the image of

(a) shape A after an enlargement, scale factor 2, centre (0, 1), [2]

(b) shape A after a reflection in the line $y = x - 1$. [3]

(ii) Describe fully the **single** transformation that maps shape A onto shape B.

View solution

.....

..... [3]

(b)

View solution

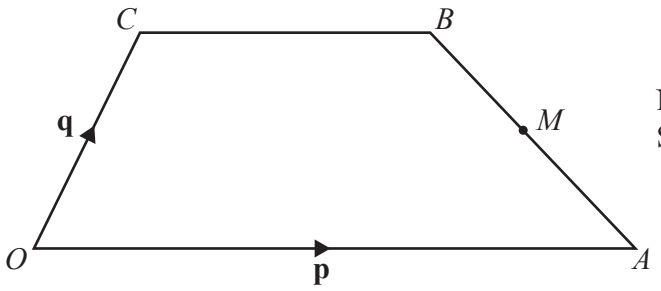

NOT TO SCALE

$OABC$ is a trapezium and O is the origin.
M is the midpoint of AB.
$\overrightarrow{OA} = \mathbf{p}$, $\overrightarrow{OC} = \mathbf{q}$ and $OA = 2CB$.

Find, in terms of **p** and **q**, the position vector of M.
Give your answer in its simplest form.

..... [3]

8 **(a)** $f(x) = 3 - 5x$

View solution

(i) Find x when $f(x) = -5$.

$x =$ ..... [2]

(ii) Find $f^{-1}(x)$.

View solution

$f^{-1}(x) =$ ..... [2]

(b) $g(x) = 18 - 3x - x^2$

View solution

(i) Write $g(x)$ in the form $b - (a + x)^2$.

..... [3]

(ii) Sketch the graph of $y = g(x)$.
On your sketch, show the coordinates of the turning point.

View solution

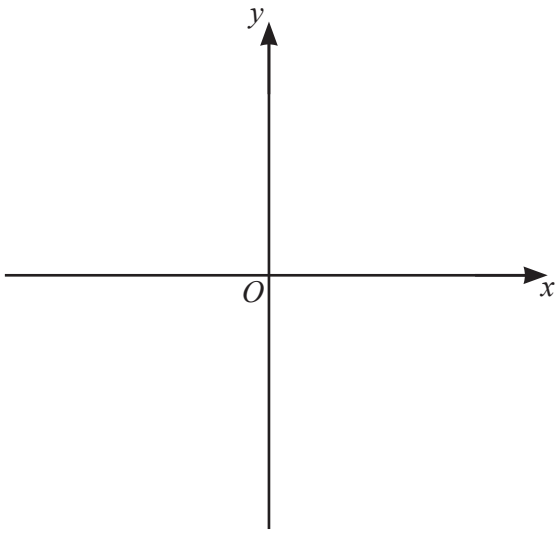

[3]

© UCLES 2021

(iii) Find the equation of the tangent to the graph of $y = 18 - 3x - x^2$ at $x = 4$.
Give your answer in the form $y = mx + c$.

View solution

$y =$ ..... [6]

9 (a)

View solution

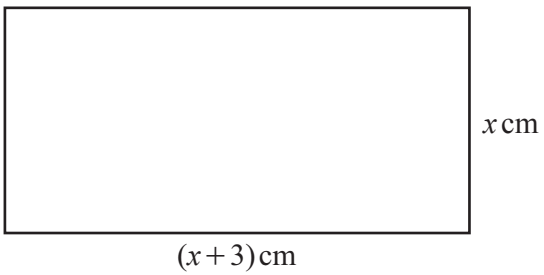

NOT TO SCALE

This rectangle has perimeter 20 cm.

Find the value of x.

$x =$ ..... [3]

(b)

View solution

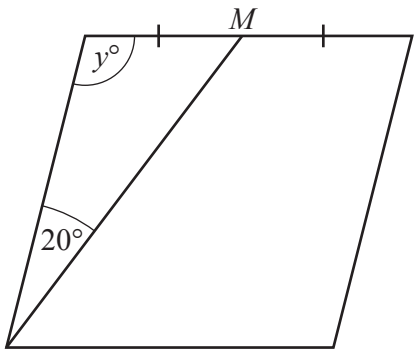

NOT TO SCALE

This rhombus has perimeter 20 cm and angle y is obtuse.
M is the midpoint of one of the sides.

Find the value of y.

$y =$ ..... [5]

(c)

View solution

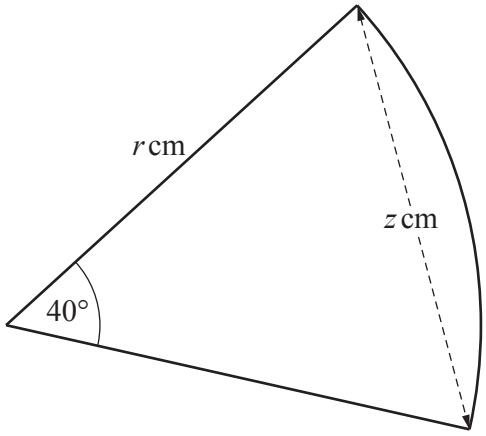

NOT TO SCALE

This sector of a circle has radius r and perimeter 20 cm.

Find the value of z.

$z =$ ..... [6]

BLANK PAGE

Permission to reproduce items where third-party owned material protected by copyright is included has been sought and cleared where possible. Every reasonable effort has been made by the publisher (UCLES) to trace copyright holders, but if any items requiring clearance have unwittingly been included, the publisher will be pleased to make amends at the earliest possible opportunity.

To avoid the issue of disclosure of answer-related information to candidates, all copyright acknowledgements are reproduced online in the Cambridge Assessment International Education Copyright Acknowledgements Booklet. This is produced for each series of examinations and is freely available to download at www.cambridgeinternational.org after the live examination series.

Cambridge Assessment International Education is part of the Cambridge Assessment Group. Cambridge Assessment is the brand name of the University of Cambridge Local Examinations Syndicate (UCLES), which itself is a department of the University of Cambridge.

© UCLES 2021