Cambridge Assessment International Education

Cambridge IGCSE™

CANDIDATE NAME									
CENTRE NUMBER						CANDIDATE NUMBER			

MATHEMATICS **0580/41**

Paper 4 (Extended) **October/November 2022**

2 hours 30 minutes

You must answer on the question paper.

You will need: Geometrical instruments

INSTRUCTIONS

- Answer **all** questions.
- Use a black or dark blue pen. You may use an HB pencil for any diagrams or graphs.
- Write your name, centre number and candidate number in the boxes at the top of the page.
- Write your answer to each question in the space provided.
- Do **not** use an erasable pen or correction fluid.
- Do **not** write on any bar codes.
- You should use a calculator where appropriate.
- You may use tracing paper.
- You must show all necessary working clearly.
- Give non-exact numerical answers correct to 3 significant figures, or 1 decimal place for angles in degrees, unless a different level of accuracy is specified in the question.
- For π, use either your calculator value or 3.142.

INFORMATION

- The total mark for this paper is 130.
- The number of marks for each question or part question is shown in brackets [ ].

This document has **20** pages. Any blank pages are indicated.

© UCLES 2022

1 **(a)** Calculate the volume of

(i) a solid cylinder with radius 6 cm and height 14 cm,

View solution

..... cm^3 [2]

(ii) a solid hemisphere with radius 6 cm.
[The volume, V, of a sphere with radius r is $V = \frac{4}{3}\pi r^3$.]

View solution

..... cm^3 [2]

(b)

View solution

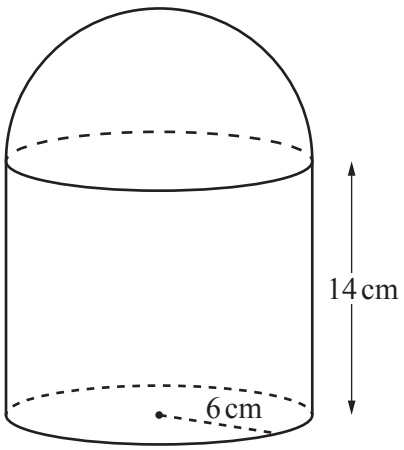

NOT TO SCALE

The cylinder and hemisphere in **part (a)** are joined to form the solid in the diagram.
The solid is made of steel and 1 cm^3 of steel has a mass of 7.85 g.

(i) Show that 1 cm^3 of steel has a mass of 0.007 85 kg.

[1]

(ii) Calculate the total mass of the solid.

View solution

..... kg [2]

(c) 2000 cm^3 of iron is melted down and some of it is used to make 50 spheres with radius 2 cm.

View solution

(i) Calculate the percentage of iron that is left over.
[The volume, V, of a sphere with radius r is $V = \frac{4}{3}\pi r^3$.]

..... % [3]

(ii) The iron left over is then made into a cube.

View solution

Calculate the length of an edge of the cube.

..... cm [1]

(d) A solid cone has radius $3R$ cm and slant height $9R$ cm.
A solid cylinder has radius x cm and height $7x$ cm.
The **total** surface area of the cone is equal to the **total** surface area of the cylinder.

View solution

Given that $R = kx$, find the value of k.
[The curved surface area, A, of a cone with radius r and slant height l is $A = \pi rl$.]

$k =$ ..... [4]

© UCLES 2022

2 **(a)** Write

(i) 2994.99 correct to the nearest 10,

View solution

..... [1]

(ii) 0.983 correct to 1 decimal place,

View solution

..... [1]

(iii) 2090 correct to 2 significant figures.

View solution

..... [1]

(b) Write down a prime number between 90 and 100.

View solution

..... [1]

(c) Write 2^{-6} as a fraction.

View solution

..... [1]

(d) Write 0.007 01 in standard form.

View solution

..... [1]

(e) Simplify $1.5 \times 10^{x} + 1.5 \times 10^{x-1}$ giving your answer in standard form.

View solution

..... [2]

(f) Write $0.3\dot{7}$ as a fraction.
You must show all your working.

View solution

..... [2]

3 **(a)**

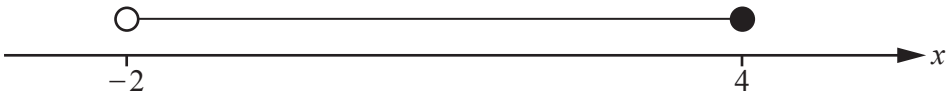

View solution

Write down the inequality shown by the number line.

..... [1]

(b) $-3 \leqslant 2x+3 < 9$

View solution

(i) Solve the inequality.

..... [3]

(ii) Write down all the integer values of x that satisfy the inequality.

View solution

..... [2]

(c) Solve the equations.

View solution

(i) $3(3-x)-\frac{2(x+2)}{5}=1$

$x =$ ..... [4]

(ii) $\frac{5}{x+3}=\frac{3}{x+5}$

View solution

$x =$ ..... [3]

4 (a) (i) Zak invests \$500 at a rate of 2% per year simple interest.

Calculate the value of Zak's investment at the end of 5 years.

View solution

\$ ..... [3]

(ii) Yasmin invests \$500 at a rate of 1.8% per year compound interest.

Calculate the value of Yasmin's investment at the end of 5 years.

View solution

\$ ..... [2]

(iii) Zak and Yasmin continue with these investments.

How many **more complete** years is it before the value of Yasmin's investment is greater than the value of Zak's investment?

View solution

..... [3]

(b) Xavier buys a car for $2500.
The value of the car decreases exponentially at a rate of 10% each year.

View solution

Calculate the value of Xavier's car at the end of 5 years.
Give your answer correct to the nearest dollar.

$ ..... [3]

(c) The number of a certain type of bacteria increases exponentially at a rate of r% each day.
After 22 days, the number of this bacteria has doubled.

View solution

Find the value of r.

$r =$ ..... [3]

5 **(a)** 100 students each record the time, t minutes, taken to eat a pizza.
The cumulative frequency diagram shows the results.

View solution

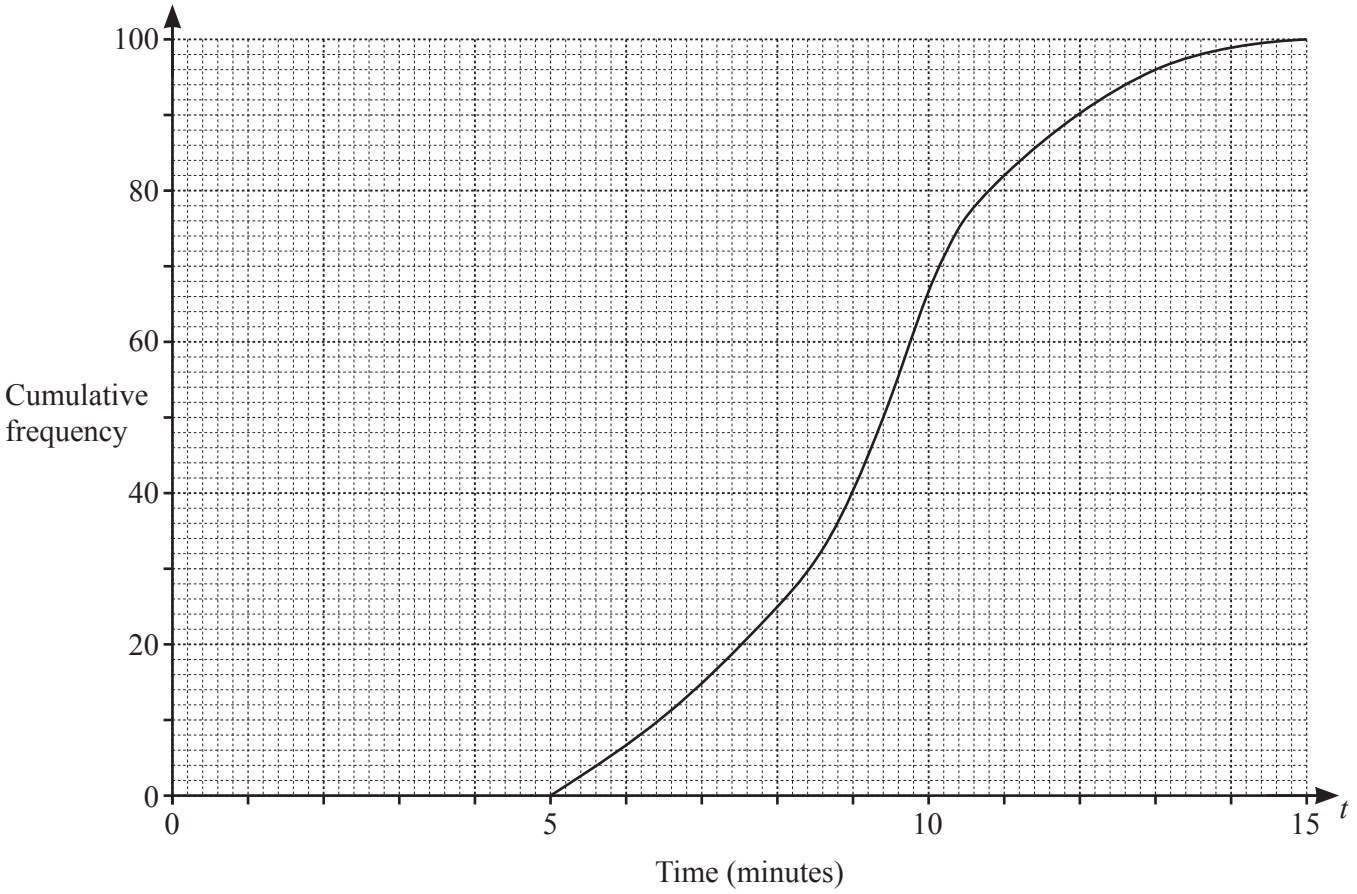

Find an estimate of

(i) the median,

..... min [1]

(ii) the interquartile range,

View solution

..... min [2]

(iii) the number of students taking more than 11 minutes to eat a pizza.

View solution

..... [2]

(b) 150 students each record how far they can throw a tennis ball.
The table shows the results.

View solution

Distance (d metres)	$0 < d \leqslant 20$	$20 < d \leqslant 30$	$30 < d \leqslant 35$	$35 < d \leqslant 45$	$45 < d \leqslant 60$
Frequency	4	38	40	53	15

(i) Calculate an estimate of the mean.

..... m [4]

View solution

(ii) A histogram is drawn to show this information.
The height of the bar representing $30 < d \leqslant 35$ is 12 cm.

Calculate the height of each of the other bars.

Distance (d metres)	Frequency	Height of bar (cm)
$0 < d \leqslant 20$	4	
$20 < d \leqslant 30$	38	
$30 < d \leqslant 35$	40	12
$35 < d \leqslant 45$	53	
$45 < d \leqslant 60$	15	

[3]

View solution

(iii) Two students are chosen at random.

Find the probability that they both threw the ball more than 45 m.

..... [2]

© UCLES 2022

6 **(a)** $\mathbf{p} = \begin{pmatrix} 2 \\ 3 \end{pmatrix}$ $\mathbf{q} = \begin{pmatrix} -1 \\ 1 \end{pmatrix}$

View solution

Find

(i) $3\mathbf{q}$,

$\begin{pmatrix} \quad \\ \quad \end{pmatrix}$ [1]

(ii) $\mathbf{p} - \mathbf{q}$,

View solution

$\begin{pmatrix} \quad \\ \quad \end{pmatrix}$ [1]

(iii) $|\mathbf{p}|$.

View solution

..... [2]

(b) B is the point (2, 7) and $\overrightarrow{AB} = \begin{pmatrix} -4 \\ 6 \end{pmatrix}$.

View solution

Find the coordinates of A.

(..... , ...) [2]

© UCLES 2022

(c)

View solution

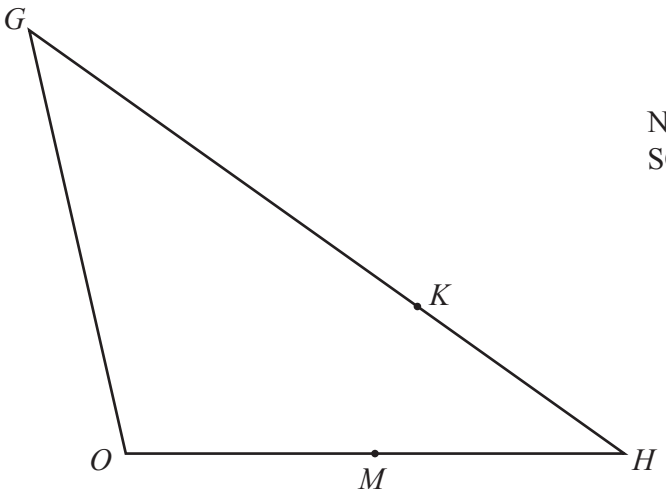

NOT TO SCALE

In triangle OGH, M is the midpoint of OH and K divides GH in the ratio 5 : 2.
$\overrightarrow{OG} = \mathbf{g}$ and $\overrightarrow{OH} = \mathbf{h}$.

Find $\overrightarrow{MK}$ in terms of **g** and **h**.
Give your answer in its simplest form.

$\overrightarrow{MK} =$ ..... [4]

© UCLES 2022

7 $f(x) = 10 - x$ $g(x) = \frac{2}{x},\ x \neq 0$ $h(x) = 2^x$ $j(x) = 5 - 2x$

(a) (i) Find $g\left(\frac{1}{2}\right)$.

View solution

..... [1]

(ii) Find $hg\left(\frac{1}{2}\right)$.

View solution

..... [1]

(b) Find x when $f(x) = 7$.

View solution

$x =$ ..... [1]

(c) Find x when $g(x) = h(3)$.

View solution

$x =$ ..... [2]

(d) Find $j^{-1}(x)$.

View solution

$j^{-1}(x) =$ ..... [2]

(e) Write $f(x) + g(x) + 1$ as a single fraction in its simplest form.

View solution

..... [3]

© UCLES 2022

(f) $\left(\mathrm{f}(x)\right)^2 - \mathrm{ff}(x) = ax^2 + bx + c$

View solution

Find the values of a, b and c.

$a =$ .....

$b =$ .....

$\mathrm{c} =$ ..... [4]

(g) Find x when $\mathrm{h}^{-1}(x) = 10$.

View solution

$x =$ ..... [2]

8

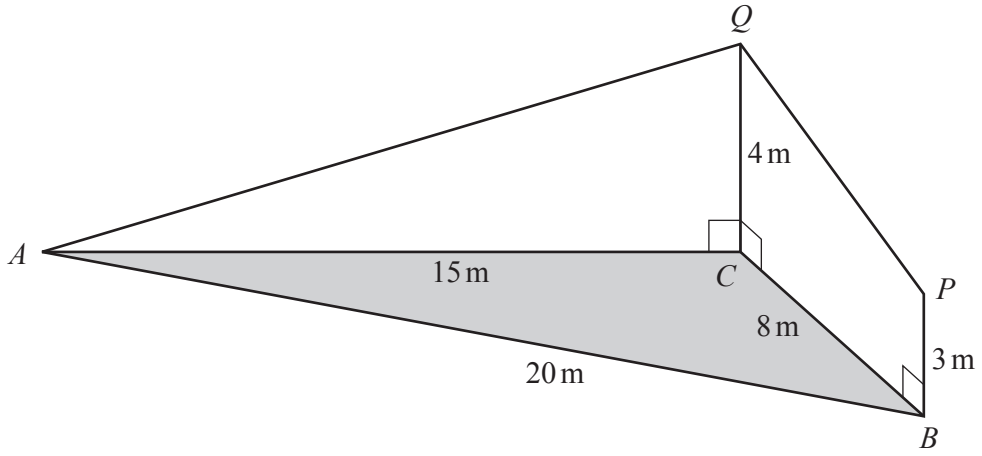

NOT TO SCALE

The diagram shows triangle ABC on horizontal ground.
$AC = 15\,\text{m}$, $BC = 8\,\text{m}$ and $AB = 20\,\text{m}$.

BP and CQ are vertical poles of different heights.
$BP = 3\,\text{m}$ and $CQ = 4\,\text{m}$.
AQ and PQ are straight wires.

(a) Show that angle $ACB = 117.5°$, correct to 1 decimal place.

View solution

[4]

(b) Calculate the area of triangle ABC.

View solution

..... m^2 [2]

(c) Calculate the length of AQ.

View solution

..... m [2]

(d) Calculate the angle of elevation of Q from P.

View solution

..... [3]

(e) Another straight wire connects A to the midpoint of PQ.

Calculate the angle between this wire and the horizontal ground.

View solution

..... [5]

9 (a)

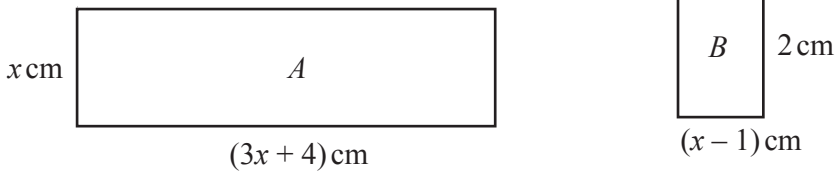

NOT TO SCALE

View solution

The total of the areas of rectangles A and B is $20\,\text{cm}^2$.

(i) Show that $3x^2 + 6x - 22 = 0$.

[2]

(ii) Solve the equation $3x^2 + 6x - 22 = 0$, giving your answers correct to 4 significant figures. You must show all your working.

View solution

$x =$ ..... or $x =$ ..... [4]

(iii) Find the perimeter of rectangle B.

View solution

..... cm [1]

(b)

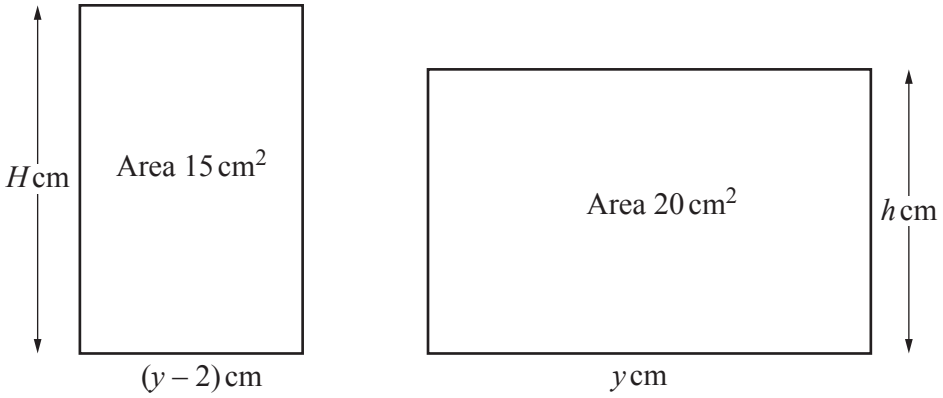

NOT TO SCALE

View solution

The diagram shows two rectangles where $H - h = 1$.

By forming a quadratic equation and factorising, find the value of y.

$y =$ ..... [7]

10 (a)

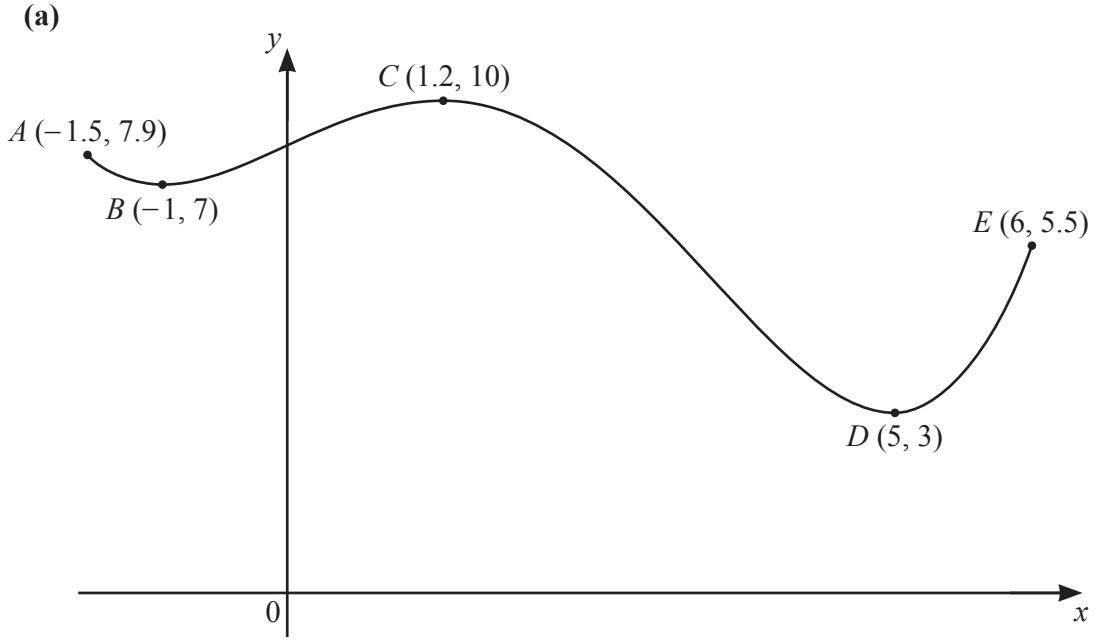

NOT TO SCALE

The diagram shows a sketch of the graph of $y = f(x)$ for $-1.5 \leqslant x \leqslant 6$.
The coordinates of five points on the graph of $y = f(x)$ are shown on the diagram.

(i) $f(x) = k$ has two solutions in the interval $-1.5 \leqslant x \leqslant 6$.

Write down a possible integer value of k.

$k =$ ..... [1]

(ii) $f(x) = j$ has no solutions in the interval $-1.5 \leqslant x \leqslant 6$ when $j < a$ or $j > b$.

Find the maximum value of a and the minimum value of b.

$a =$ .....

$b =$ ..... [2]

© UCLES 2022

(b) Find the coordinates of the two stationary points on the graph of $y = x^6 - 6x^5$.
You must show all your working.

View solution

(..... , ...)

(..... , ...) [5]

BLANK PAGE

Permission to reproduce items where third-party owned material protected by copyright is included has been sought and cleared where possible. Every reasonable effort has been made by the publisher (UCLES) to trace copyright holders, but if any items requiring clearance have unwittingly been included, the publisher will be pleased to make amends at the earliest possible opportunity.

To avoid the issue of disclosure of answer-related information to candidates, all copyright acknowledgements are reproduced online in the Cambridge Assessment International Education Copyright Acknowledgements Booklet. This is produced for each series of examinations and is freely available to download at www.cambridgeinternational.org after the live examination series.

Cambridge Assessment International Education is part of Cambridge Assessment. Cambridge Assessment is the brand name of the University of Cambridge Local Examinations Syndicate (UCLES), which is a department of the University of Cambridge.

© UCLES 2022