Cambridge Assessment International Education

Cambridge IGCSE™

CANDIDATE NAME									
CENTRE NUMBER						CANDIDATE NUMBER				

MATHEMATICS **0580/42**

Paper 4 (Extended) **October/November 2022**

2 hours 30 minutes

You must answer on the question paper.

You will need: Geometrical instruments

INSTRUCTIONS

- Answer **all** questions.
- Use a black or dark blue pen. You may use an HB pencil for any diagrams or graphs.
- Write your name, centre number and candidate number in the boxes at the top of the page.
- Write your answer to each question in the space provided.
- Do **not** use an erasable pen or correction fluid.
- Do **not** write on any bar codes.
- You should use a calculator where appropriate.
- You may use tracing paper.
- You must show all necessary working clearly.
- Give non-exact numerical answers correct to 3 significant figures, or 1 decimal place for angles in degrees, unless a different level of accuracy is specified in the question.
- For π, use either your calculator value or 3.142.

INFORMATION

- The total mark for this paper is 130.
- The number of marks for each question or part question is shown in brackets [ ].

This document has **20** pages. Any blank pages are indicated.

© UCLES 2022

1 **(a)** **(i)** At a football club, season tickets are sold for seated areas and for standing areas.
The cost of season tickets are in the ratio seated : standing = 5 : 3.
The cost of a season ticket for the standing area is $45.

View solution

Find the cost of a season ticket for the seated area.

$ ..... [2]

(ii) In 2021, the value of the team's players was $2.65 million.
In 2022 this value has decreased by 12%.

View solution

Find the value in 2022.

$ ..... million [2]

(iii) The number of people at a football match is 1455.
This is 6.25% of the total number of people allowed in the stadium.

View solution

Find the total number of people allowed in the stadium.

..... [2]

(iv) The average attendance increased exponentially by 4% each year for the three years from 2016 to 2019.
In 2019 the average attendance was 1631.

View solution

Find the average attendance for 2016.

..... [3]

© UCLES 2022

(b) Another club sells season tickets for individuals and for families.
In 2018, the number of season tickets sold is in the ratio family : individual = 2 : 7.

View solution

(i) The number of family season tickets sold is x.

Write an expression, in terms of x, for the number of individual season tickets sold.

..... [1]

(ii) In 2019, the number of family season tickets sold increases by 12 and the number of individual season tickets sold decreases by 26.

Complete the table by writing expressions, in terms of x, for the number of tickets sold each year.

View solution

Year	Family tickets	Individual tickets
2018	x	
2019		

[2]

(iii) In 2019, the number of individual season tickets sold is 3 times the number of family season tickets sold.

Write an equation in x and solve it to find the number of family tickets sold in 2018.

View solution

$x =$ ..... [4]

© UCLES 2022

2 All the lengths in this question are measured in centimetres.

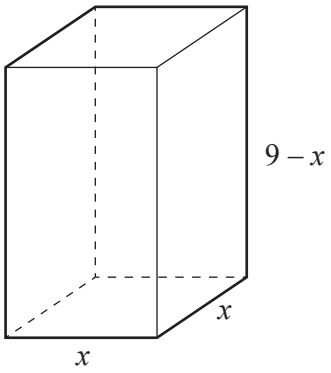

NOT TO SCALE

The diagram shows a solid cuboid with a square base.

View solution

(a) The volume, $V\,\text{cm}^3$, of the cuboid is $V = x^2(9-x)$.
The table shows some values of V for $0 \leqslant x \leqslant 9$.

x	0	1	2	3	4	5	6	7	8	9
V	0	8		54	80	100	108	98	64	0

(i) Complete the table.

[1]

(ii) On the grid on the opposite page, draw the graph of $V = x^2(9-x)$ for $0 \leqslant x \leqslant 9$. [4]

(iii) Find the values of x when the volume of the cuboid is $44\,\text{cm}^3$.

$x =$ ..... or $x =$ ..... [2]

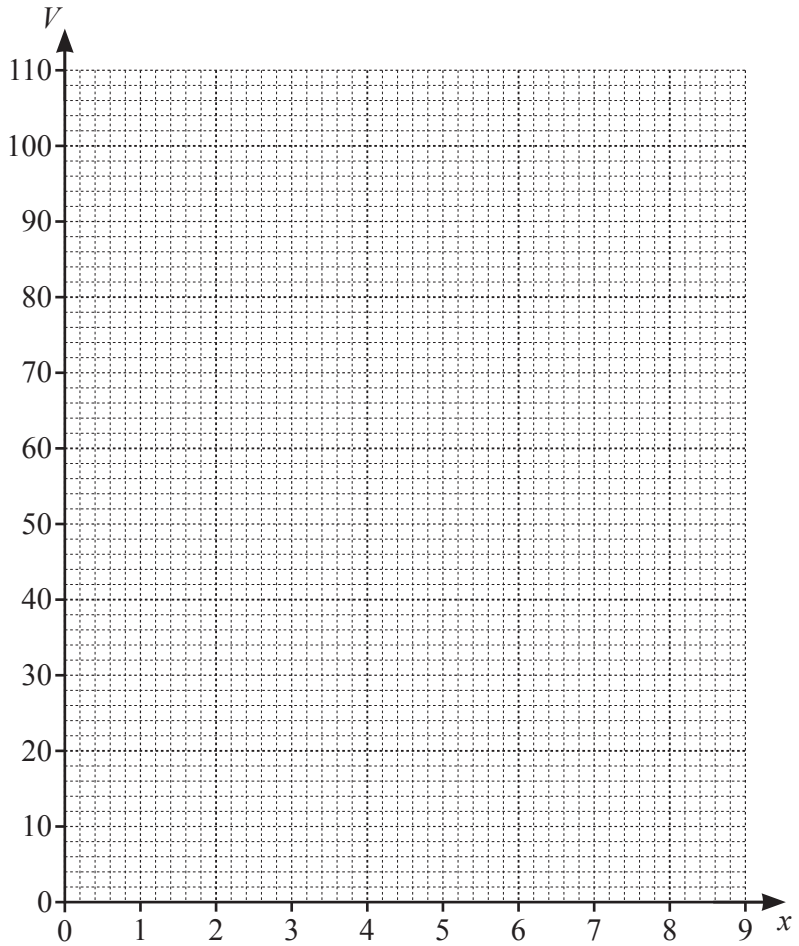

(b) (i) Show that the total surface area of the cuboid is $(36x - 2x^2)\text{cm}^2$.

View solution

[2]

(ii) Find the surface area when the volume of the cuboid is a maximum.

View solution

..... cm^2 [3]

3 Kai and Ann carry out a survey on the distances travelled, in kilometres, by 200 cars.

Kai completes this frequency table for the data collected.

Distance (d km)	$80 < d \leqslant 100$	$100 < d \leqslant 150$	$150 < d \leqslant 200$	$200 < d \leqslant 300$	$300 < d \leqslant 400$
Frequency	7	33	76	52	32

(a) (i) Calculate an estimate of the mean.

View solution

..... km [4]

(ii) Ann uses this frequency table for the same data.
There is a different interval for the final group.

View solution

Distance (d km)	$80 < d \leqslant 100$	$100 < d \leqslant 150$	$150 < d \leqslant 200$	$200 < d \leqslant 300$	$300 < d \leqslant 360$
Frequency	7	33	76	52	32

Without calculating an estimate of the mean for this data, find the difference between Ann's and Kai's estimate of the mean.
You must show all your working.

..... km [2]

© UCLES 2022

(iii) A histogram is drawn showing the information in **Kai's** frequency table.
The height of the block for the interval $200 < d \leqslant 300$ is 2.6 cm.

View solution

Calculate the height of the block for each of the following intervals.

$80 < d \leqslant 100$ ..... cm

$150 < d \leqslant 200$ ..... cm

$300 < d \leqslant 400$ ..... cm [3]

(b) One car is picked at random.

View solution

Find the probability that the car has travelled more than 300 km.

..... [1]

(c) Two of the 200 cars are picked at random.

View solution

Find the probability that

(i) both cars have travelled 150 km or less,

..... [2]

(ii) one car has travelled more than 200 km and the other car has travelled 100 km or less.

View solution

..... [3]

4

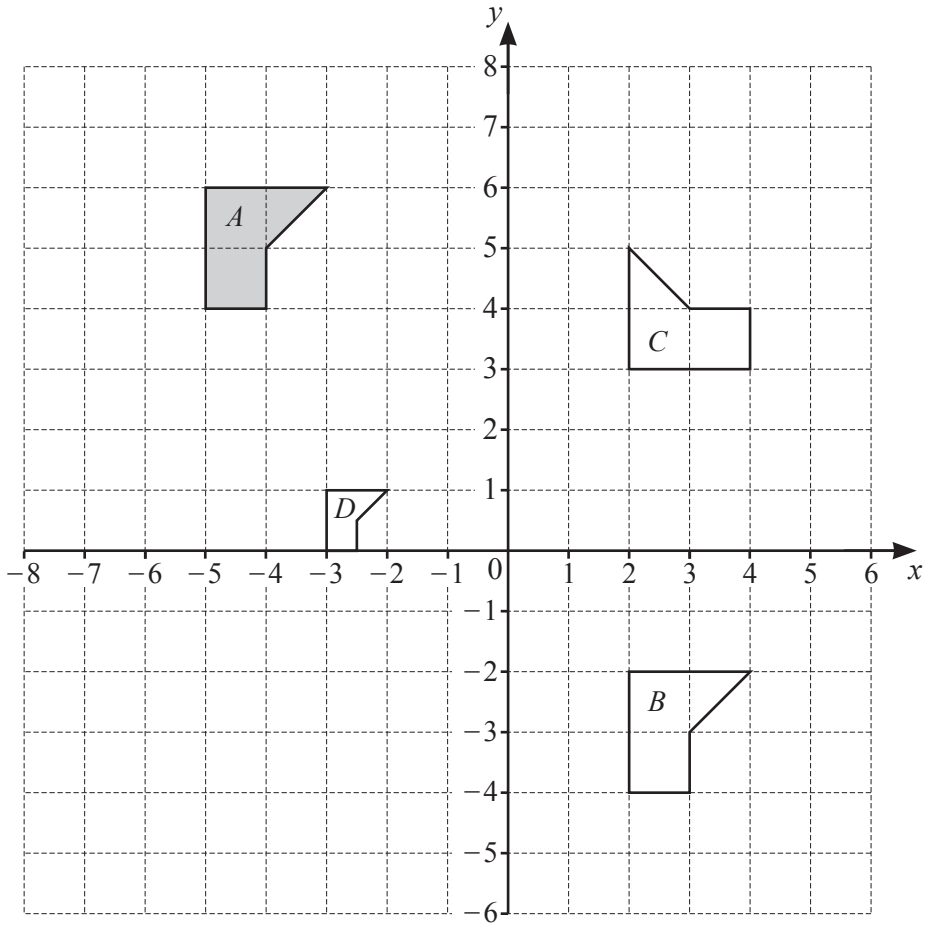

(a) Describe fully the **single** transformation that maps

(i) shape A onto shape B,

.....

..... [2]

(ii) shape A onto shape C,

.....

..... [3]

(iii) shape A onto shape D.

.....

..... [3]

(b) On the grid, draw the image of shape A after a reflection in the line $y = x + 8$. [2]

5 **(a)** The diagram shows the speed–time graph for part of a journey for two vehicles, a car and a bus.

View solution

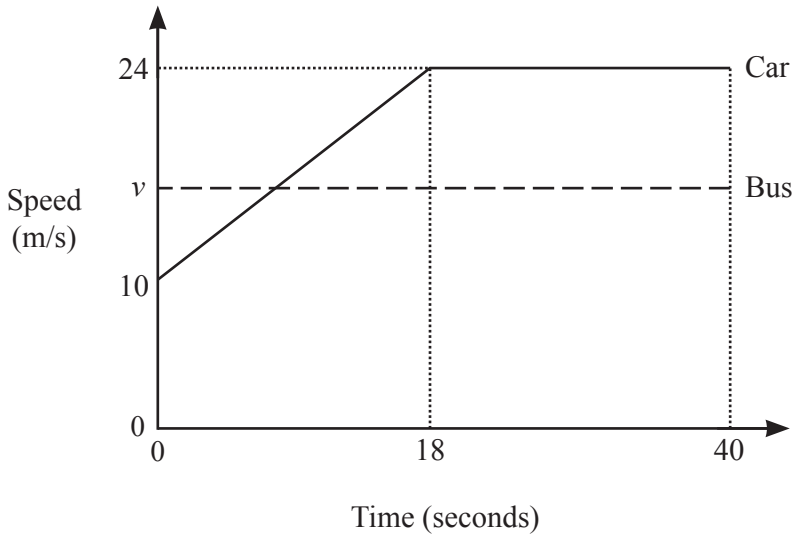

NOT TO SCALE

(i) Calculate the acceleration of the car during the first 18 seconds.

..... m/s^2 [1]

(ii) In the first 40 seconds the car travelled 134 m more than the bus.

View solution

Calculate the constant speed, v, of the bus.

v = ... m/s [4]

(b) A train takes 10 minutes 30 seconds to travel 16 240 m.

View solution

Calculate the average speed of the train.
Give your answer in kilometres per hour.

..... km/h [3]

6 **(a)** Solve.

$$4x + 15 = 9$$

View solution

$x =$ ..... [2]

(b) Factorise.

$$a^2 - 9$$

View solution

..... [1]

(c) Write as a single fraction in its simplest form.

$$\frac{4a}{5} \div \frac{3ad}{10c}$$

View solution

..... [3]

(d) $5^n + 5^n + 5^n + 5^n + 5^n = 5^m$

Find an expression for m in terms of n.

View solution

$m =$ ..... [2]

(e) Solve by factorisation.

$$4x^2 + 8x - 5 = 0$$

View solution

$x =$ ..... or $x =$ ..... [3]

© UCLES 2022

(f) **(i)** y is directly proportional to $(x+3)^3$.
When $x = 2,\ y = 13.5$.

Find x when $y = 108$.

View solution

$x =$ ..... [3]

(ii) g is inversely proportional to the square of d.
When d is halved, the value of g is multiplied by a factor n.

Find n.

View solution

$n =$ ..... [2]

(g) Expand and simplify.

$$(2x+3)(x-1)(x+3)$$

View solution

..... [3]

(h) Find the derivative, $\frac{\mathrm{d}y}{\mathrm{d}x}$, of $y = 3x^2 + 4x - 1$.

View solution

..... [2]

7 (a)

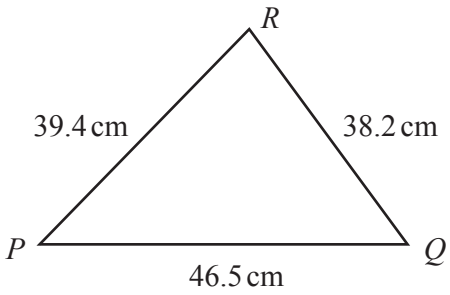

NOT TO SCALE

View solution

(i) Calculate angle QPR.

Angle QPR = ... [4]

(ii) Find the shortest distance from Q to PR.

View solution

..... cm [3]

(b) The diagram shows a cuboid.

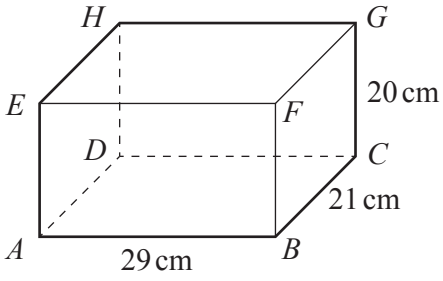

NOT TO SCALE

View solution

(i) Calculate the length AG.

AG = ... cm [3]

© UCLES 2022

(ii) Calculate the angle between AG and the base $ABCD$.

View solution

..... [3]

(c)

View solution

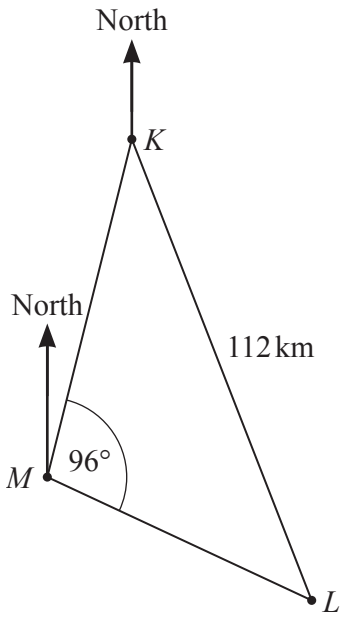

NOT TO SCALE

The diagram shows the positions of a lighthouse, L, and two ships, K and M.
The bearing of L from K is 155° and $KL = 112\,\text{km}$.
The bearing of K from M is 010° and angle $KML = 96°$.

Find the bearing and distance of ship M from the lighthouse, L.

Bearing .....

Distance ..... km [5]

© UCLES 2022

8 AB is a line with midpoint M.
A is the point (2, 3) and M is the point (12, 7).

(a) Find the coordinates of B.

View solution

(..... , ...) [2]

(b) Show that the equation of the perpendicular bisector of AB is $2y + 5x = 74$.

View solution

[4]

(c) The perpendicular bisector of AB passes through the point N.
The point N has coordinates $(2, n)$.

View solution

Find the value of n.

$n =$ ..... [1]

(d) Points A, M and N form a triangle.

View solution

Find the area of the triangle.

..... [2]

© UCLES 2022

9



(a) On the diagram, sketch the graph of $y = \sin x$ for $0° \leqslant x \leqslant 360°$. [2]

View solution

(b) Solve the equation $5\sin x + 4 = 0$ for $0° \leqslant x \leqslant 360°$.

View solution

$x =$ ..... or $x =$ ..... [3]

10 **(a)** The lengths of the sides of a triangle are 11.4 cm, 14.8 cm and 15.7 cm, all correct to 1 decimal place.

View solution

Calculate the upper bound of the perimeter of the triangle.

..... cm [2]

(b)

View solution

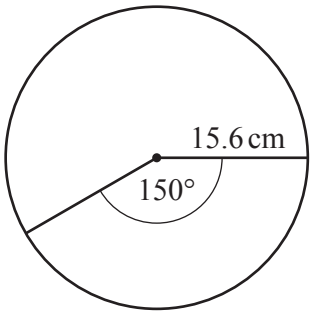

NOT TO SCALE

The diagram shows a circle, radius 15.6 cm.
The angle of the minor sector is 150°.

Calculate the area of the minor sector.

..... cm^2 [2]

© UCLES 2022

(c)

View solution

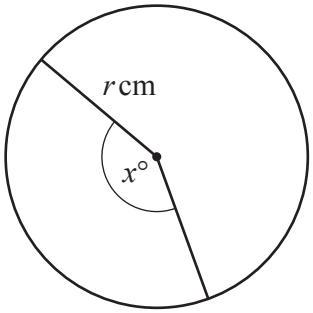

NOT TO SCALE

The diagram shows a circle, radius r cm and minor sector angle $x°$.
The **perimeter** of the major sector is three times the **perimeter** of the minor sector.

Show that $x = \dfrac{90(\pi - 2)}{\pi}$.

[4]

11 **(a)** $\left|\begin{pmatrix} 9m \\ 40m \end{pmatrix}\right| = \frac{205}{2}$

View solution

Find the two possible values of m.

$m =$ ..... or ..... [3]

(b)

View solution

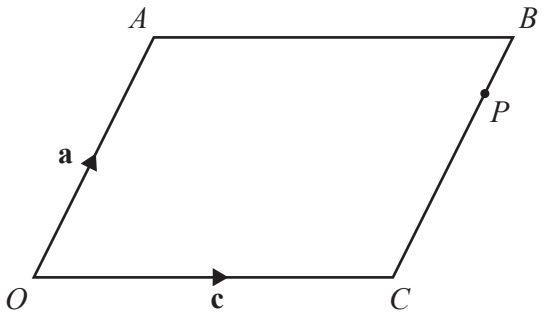

NOT TO SCALE

$OABC$ is a parallelogram.
$\overrightarrow{OA} = \mathbf{a}$ and $\overrightarrow{OC} = \mathbf{c}$.
P is the point on CB such that $CP : PB = 3 : 1$.

(i) Find, in terms of **a** and/or **c**, in their simplest form,

(a) $\overrightarrow{AC}$,

$\overrightarrow{AC} =$ ..... [1]

(b) $\overrightarrow{CP}$,

$\overrightarrow{CP} =$ ..... [1]

(c) $\overrightarrow{OP}$.

$\overrightarrow{OP} =$ ..... [1]

© UCLES 2022

(ii) OP and AB are extended to meet at Q.

Find the position vector of Q.

View solution

..... [2]

BLANK PAGE

Permission to reproduce items where third-party owned material protected by copyright is included has been sought and cleared where possible. Every reasonable effort has been made by the publisher (UCLES) to trace copyright holders, but if any items requiring clearance have unwittingly been included, the publisher will be pleased to make amends at the earliest possible opportunity.

To avoid the issue of disclosure of answer-related information to candidates, all copyright acknowledgements are reproduced online in the Cambridge Assessment International Education Copyright Acknowledgements Booklet. This is produced for each series of examinations and is freely available to download at www.cambridgeinternational.org after the live examination series.

Cambridge Assessment International Education is part of Cambridge Assessment. Cambridge Assessment is the brand name of the University of Cambridge Local Examinations Syndicate (UCLES), which is a department of the University of Cambridge.

© UCLES 2022