Cambridge Assessment International Education

Cambridge IGCSE™

CANDIDATE NAME									
CENTRE NUMBER						CANDIDATE NUMBER				

MATHEMATICS **0580/21**

Paper 2 (Extended) **October/November 2024**

1 hour 30 minutes

You must answer on the question paper.

You will need: Geometrical instruments

INSTRUCTIONS
- Answer **all** questions.
- Use a black or dark blue pen. You may use an HB pencil for any diagrams or graphs.
- Write your name, centre number and candidate number in the boxes at the top of the page.
- Write your answer to each question in the space provided.
- Do **not** use an erasable pen or correction fluid.
- Do **not** write on any bar codes.
- You should use a calculator where appropriate.
- You may use tracing paper.
- You must show all necessary working clearly.
- Give non-exact numerical answers correct to 3 significant figures, or 1 decimal place for angles in degrees, unless a different level of accuracy is specified in the question.
- For π, use either your calculator value or 3.142.

INFORMATION
- The total mark for this paper is 70.
- The number of marks for each question or part question is shown in brackets [ ].

This document has **12** pages.

© UCLES 2024

1 A concert starts at 19 50 and finishes 2 hours 42 minutes later.

Work out the time the concert finishes.

View solution

..... [1]

2 Find the reciprocal of $1\frac{1}{4}$.

View solution

..... [1]

3 Use one of the symbols $<$, $>$ or $=$ to make each statement true.

View solution

$\frac{2}{7}$ 0.2861

$\frac{99}{900}$ 11%

1^3 ..... 4^0

[2]

4 Safia has a piece of fabric of length 5.6 m.
She cuts the fabric into two parts, with lengths in the ratio 3 : 4.

View solution

Calculate the length of the longer part.

..... m [2]

© UCLES 2024

5 Work out.

(a) $3\begin{pmatrix} 6 \\ -4 \end{pmatrix}$

View solution

$\begin{pmatrix} \quad \\ \quad \end{pmatrix}$ [1]

(b) $\begin{pmatrix} 4 \\ -1 \end{pmatrix} + \begin{pmatrix} -7 \\ 5 \end{pmatrix}$

$\begin{pmatrix} \quad \\ \quad \end{pmatrix}$ [1]

View solution

6 The diagram shows a right-angled triangle ABC and a quadrilateral $AEDC$.

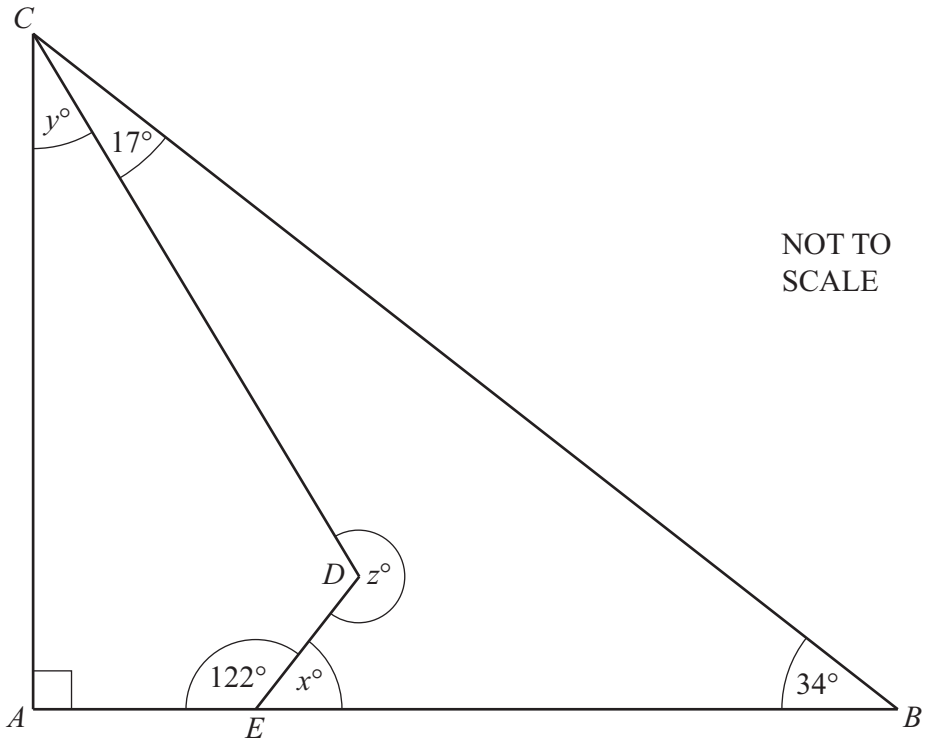

NOT TO SCALE

Find the value of

(a) x

View solution

$x =$ ..... [1]

(b) y

View solution

$y =$ ..... [1]

(c) z.

View solution

$z =$ ..... [1]

7 Factorise.

$28x - 35$

View solution

..... [1]

View solution

8 Edith invests \$3000 in a savings account.
The account pays simple interest at a rate of 2.6% per year.

Calculate the total interest earned at the end of 3 years.

\$ ..... [2]

View solution

9

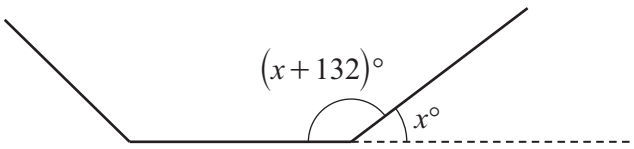

NOT TO SCALE

The diagram shows part of a regular polygon.
The interior angle of the polygon is 132° larger than the exterior angle.

Calculate the number of sides of this polygon.

..... [3]

© UCLES 2024

10 Jacinda plays a game with her friend.
She can win, lose or draw the game.
The probability that she wins the game is 0.28 .

View solution

(a) Jacinda is twice as likely to draw the game as to lose the game.

Work out the probability that she loses the game.

..... [2]

View solution

(b) Jacinda plays the game 150 times.

Find the expected number of times that **she wins**.

..... [1]

View solution

11 **Without using a calculator**, work out $5\frac{1}{3} - 3\frac{4}{7}$.
You must show all your working and give your answer as a mixed number in its simplest form.

..... [3]

© UCLES 2024

12 Solve the simultaneous equations.
You must show all your working.

View solution

$$5x + 6y = 9$$
$$3x - 2y = -17$$

$x =$ .....

$y =$ .....

[3]

13 **(a)** A sequence has nth term $3n^2 - 1$.

View solution

Find the second term in this sequence.

..... [1]

(b) The table shows the first five terms of sequences A and B.

View solution

	1st term	2nd term	3rd term	4th term	5th term	nth term
Sequence A	–6	–2	2	6	10	
Sequence B	3	17	55	129	251	

Complete the table to show the nth term of each sequence.

[4]

© UCLES 2024

14 Two solid steel statues are mathematically similar.
The smaller statue has height 12 cm and the larger statue has height 15 cm.
The larger statue has a mass 2.5 kg.
The density of steel is 8 g/cm^3.

View solution

Calculate the volume of the smaller statue.
[Density = mass ÷ volume.]

..... cm^3 [4]

15 Students in class *P* take a test.
These statistics show information about their marks.

- lower quartile = 38
- median = 53
- interquartile range = 28
- range = 81
- highest mark = 96

(a) Draw a box-and-whisker plot to represent this information.

View solution

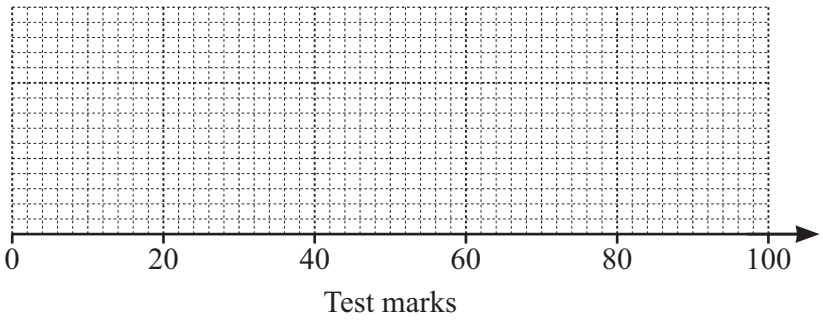

[3]

(b) Students in class *Q* take the same test.
For class *Q*, the median is 49 and the interquartile range is 35.

View solution

Make two comments comparing the distribution of marks for class *P* with that of class *Q*.

1. .....

.....

2. .....

.....

[2]

16

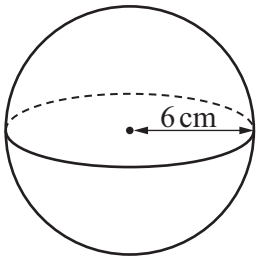

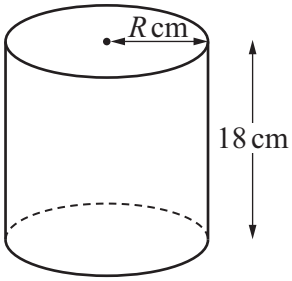

NOT TO SCALE

The diagram shows a sphere of radius 6 cm and a cylinder of height 18 cm and radius R cm.
The volume of the sphere is equal to the volume of the cylinder.

Calculate the curved surface area of the cylinder.
Give your answer in terms of π.
[The volume, V, of a sphere with radius r is $V = \frac{4}{3}\pi r^3$]

..... cm^2 [4]

17 Solve.

$$3x^2 - 7x - 16 = 0$$

You must show all your working and give your answers correct to 2 decimal places.

$x =$ ..... or $x =$ ..... [4]

© UCLES 2024

18 $g(x) = 4^{x+3}$

(a) Find x when $g(x) = 1$.

View solution

..... [1]

(b) Find $g^{-1}\left(\frac{1}{16}\right)$.

View solution

..... [2]

19 $\mathscr{E} = \{1, 2, 3, 4, 5, 6, 7, 8, 9, 10\}$
$P = \{\text{odd numbers}\}$
$Q = \{\text{multiples of 3}\}$
$R = \{\text{square numbers}\}$

(a) Find $P \cap Q \cap R$.

View solution

{ ..... } [1]

(b) **(i)** Find $Q \cup R$.

View solution

{ ..... } [1]

(ii) Find $n\left(P \cap (Q \cup R)'\right)$.

View solution

..... [1]

© UCLES 2024

20

View solution

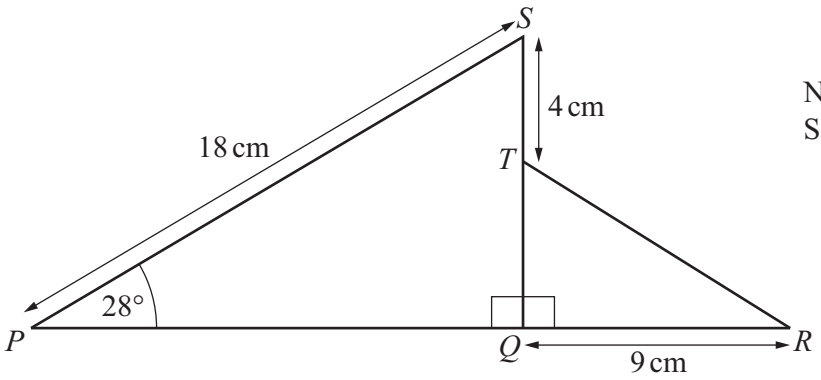

NOT TO SCALE

The diagram shows two right-angled triangles PQS and RQT.
PQR and QTS are straight lines.

Calculate angle QTR.

Angle QTR = ... [5]

21 Solve the equation $3\tan x + 5 = 1$ for $0° \leqslant x \leqslant 360°$.

View solution

x = ... or x = ... [3]

© UCLES 2024

22 The graph of $y = (x+2)(x-1)^2$ is shown on the grid.

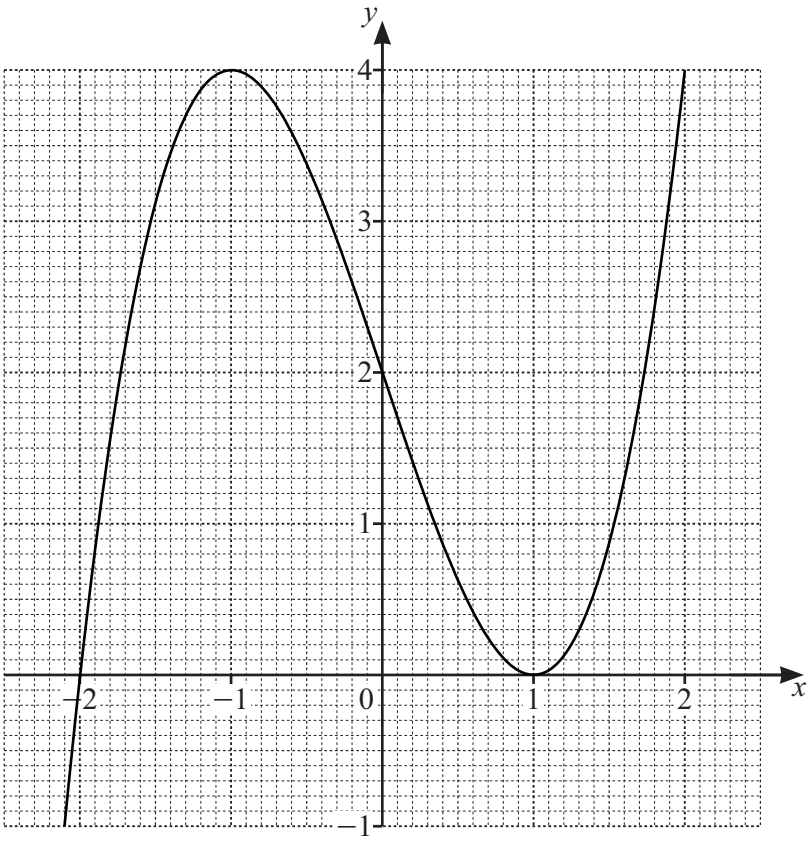

(a) Show that $y = (x+2)(x-1)^2$ can be written as $y = x^3 - 3x + 2$.

View solution

[2]

(b) By drawing a suitable straight line, solve the equation $2x^3 - 5x = 0$.

View solution

$x =$ ..... or $x =$ ..... or $x =$ ..... [4]

Question 23 is printed on the next page.

23 $(x-5)^2+k=x^2-px-21$

View solution

Find the value of p and the value of k.

$p =$ .....

$k =$ .....
[2]

Permission to reproduce items where third-party owned material protected by copyright is included has been sought and cleared where possible. Every reasonable effort has been made by the publisher (UCLES) to trace copyright holders, but if any items requiring clearance have unwittingly been included, the publisher will be pleased to make amends at the earliest possible opportunity.

To avoid the issue of disclosure of answer-related information to candidates, all copyright acknowledgements are reproduced online in the Cambridge Assessment International Education Copyright Acknowledgements Booklet. This is produced for each series of examinations and is freely available to download at www.cambridgeinternational.org after the live examination series.

Cambridge Assessment International Education is part of Cambridge Assessment. Cambridge Assessment is the brand name of the University of Cambridge Local Examinations Syndicate (UCLES), which is a department of the University of Cambridge.

© UCLES 2024