Cambridge Assessment International Education

Cambridge IGCSE™

CANDIDATE NAME									
CENTRE NUMBER						CANDIDATE NUMBER				

MATHEMATICS **0580/43**

Paper 4 Calculator (Extended) **October/November 2025**

2 hours

You must answer on the question paper.

You will need: Geometrical instruments

INSTRUCTIONS

- Answer **all** questions.
- Use a black or dark blue pen. You may use an HB pencil for any diagrams or graphs.
- Write your name, centre number and candidate number in the boxes at the top of the page.
- Write your answer to each question in the space provided.
- Do **not** use an erasable pen or correction fluid.
- Do **not** write on any bar codes.
- You should use a scientific calculator where appropriate.
- You may use tracing paper.
- You must show all necessary working clearly.
- Give non-exact numerical answers correct to 3 significant figures, or 1 decimal place for angles in degrees, unless a different level of accuracy is specified in the question.
- For π, use either your calculator value or 3.142.

INFORMATION

- The total mark for this paper is 100.
- The number of marks for each question or part question is shown in brackets [ ].

This document has **20** pages. Any blank pages are indicated.

© UCLES 2025

List of formulas

Area, A, of triangle, base b, height h.	$A = \frac{1}{2}bh$
Area, A, of circle of radius r.	$A = \pi r^2$
Circumference, C, of circle of radius r.	$C = 2\pi r$
Curved surface area, A, of cylinder of radius r, height h.	$A = 2\pi rh$
Curved surface area, A, of cone of radius r, sloping edge l.	$A = \pi rl$
Surface area, A, of sphere of radius r.	$A = 4\pi r^2$
Volume, V, of prism, cross-sectional area A, length l.	$V = Al$
Volume, V, of pyramid, base area A, height h.	$V = \frac{1}{3}Ah$
Volume, V, of cylinder of radius r, height h.	$V = \pi r^2 h$
Volume, V, of cone of radius r, height h.	$V = \frac{1}{3}\pi r^2 h$
Volume, V, of sphere of radius r.	$V = \frac{4}{3}\pi r^3$
For the equation $ax^2 + bx + c = 0$, where $a \neq 0$,	$x = \frac{-b \pm \sqrt{b^2 - 4ac}}{2a}$

For the triangle shown,

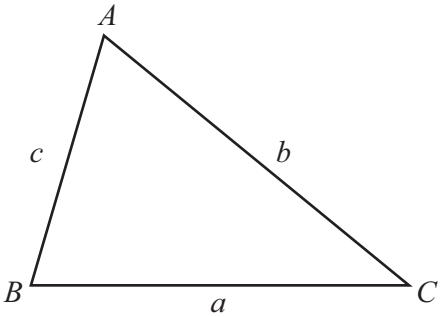

$$\frac{a}{\sin A} = \frac{b}{\sin B} = \frac{c}{\sin C}$$

$$a^2 = b^2 + c^2 - 2bc\cos A$$

$$\text{Area} = \frac{1}{2}ab\sin C$$

1 The nth term of a sequence is $5 - 2n$.

(a) Find the 6th term of this sequence.

View solution

..... [1]

(b) Find the greatest number in this sequence.

View solution

..... [1]

2 The stem-and-leaf diagram shows the age of each of 16 adults.

3	2	3	3	5	6	7	
4	0	1	5	5	6	8	9
5	1	1	1				

Key: 3 | 2 represents age 32 years

(a) Find the mode.

View solution

..... years [1]

(b) Find the median.

View solution

..... years [1]

(c) Find the percentage of the 16 adults with an age of less than 38 years.

View solution

.....% [2]

© UCLES 2025

3 $G = \frac{4}{5}m^2n$

Find the value of G when $m = 6$ and $n = 15$.

View solution

$G =$ ..... [1]

4 **(a)** The scale diagram shows the position of town A on a map.
Town B is 12 km from town A on a bearing of 080°.

View solution

Using a scale of 1 cm represents 2 km, mark the position of town B on the diagram.



Scale: 1 cm to 2 km

[2]

(b) The bearing of C from D is 130°.

View solution

Work out the bearing of D from C.

..... [2]

© UCLES 2025

5 **(a)** The diagram shows a regular decagon.
AB is a line of symmetry of the decagon.

View solution

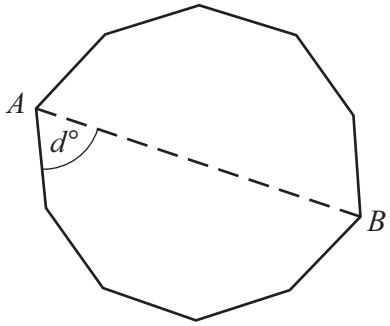

NOT TO SCALE

Work out the value of *d*.

$d =$ ..... [3]

(b) The exterior angle of a regular polygon with n sides is 45°.

View solution

Work out the value of n.

$n =$ ..... [1]

6 Simplify.

(a) $\dfrac{y^5}{y^2}$

View solution

..... [1]

(b) $3x^3 \times 5x^5$

View solution

..... [2]

7

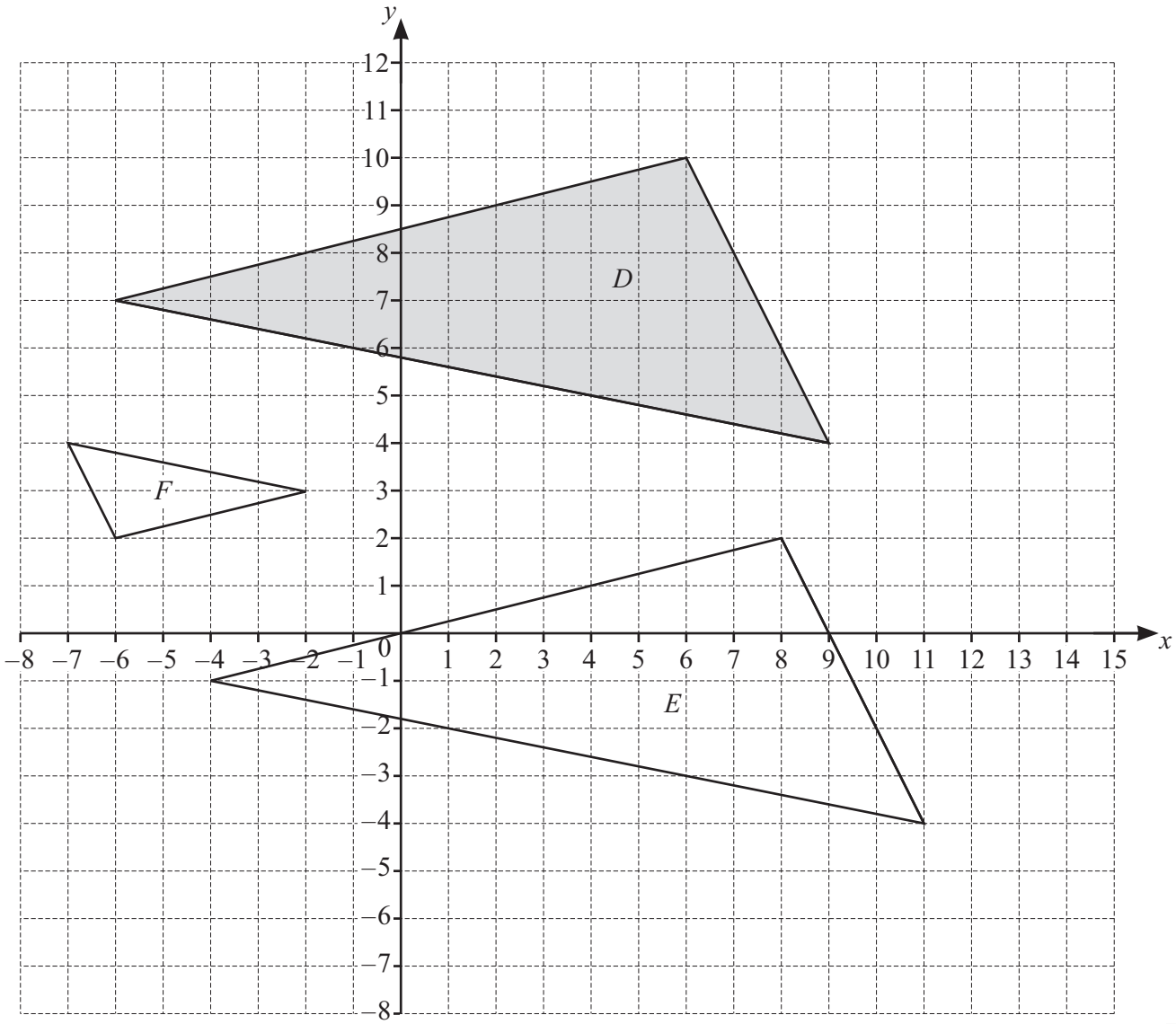

(a) Describe fully the **single** transformation that maps triangle *D* onto triangle *E*.

View solution

.....

..... [2]

(b) Describe fully the **single** transformation that maps triangle *D* onto triangle *F*.

View solution

.....

..... [3]

8 m is a positive integer.

View solution

Write these values in order of size, starting with the smallest.

m 33% of m $\frac{1}{3}$ of m 320% of $\frac{m}{10}$

....., ..., ..., ... [2]

smallest

9 Draw a ring around the calculation that is equivalent to $n \div 2\frac{3}{5}$.

View solution

$n \times 2\frac{5}{3}$ $n \times \frac{5}{13}$ $n \times \frac{13}{5}$ $\frac{1}{n} \times \frac{13}{5}$ $\frac{1}{n} \times \frac{5}{13}$

[1]

10 Solve the simultaneous equations.

View solution

You must show all your working.

$3x + 5y = 5$
$2x - 5y = 45$

$x =$ .....

$y =$ .....

[2]

© UCLES 2025

11

2.89×10^{-1}	1.3×10^{12}	8.3×10^{1}	9×10^{11}	2.03×10^{-5}	0.3×10^{-2}

View solution

Use a number from the box to complete each statement.

The number that is not written in standard form is ..... .

The largest number is ..... .

The smallest number is ..... .

[2]

View solution

12 A vase contains flowers that are red or pink or white.
Ruth picks a flower at random from the vase.
The probability that the flower is **not** red is 0.9 .
The probability that the flower is **not** pink is 0.65 .

Find the probability that the flower is white.

..... [2]

View solution

13 The point (5, 1024) lies on the curve $y = c^x$, where c is a whole number.

Find the y-coordinate of the point on the curve with x-coordinate -2.

..... [3]

© UCLES 2025

14 These expressions are all equal in value.

View solution

$$\frac{5x-2}{3} \qquad 10-x \qquad y+11$$

Find the value of y.

$y =$ ..... [5]

15 The population of a town is 54 000.
The population is **decreasing** exponentially at a rate of 2% per year.

View solution

(a) Calculate the decrease in the population at the end of 4 years.

..... [3]

(b) Find the number of complete years it takes for the population of 54 000 to first fall below 44 000.

View solution

..... years [2]

© UCLES 2025

16 Expand and simplify.

(a) $7(x+2)+4(3x-5)$

View solution

..... [2]

(b) $(3x-y)(5x+2y)$

View solution

..... [2]

17 Make t the subject of the formula.

View solution

$$x = \frac{7t}{5-t}$$

$t =$ ..... [3]

18

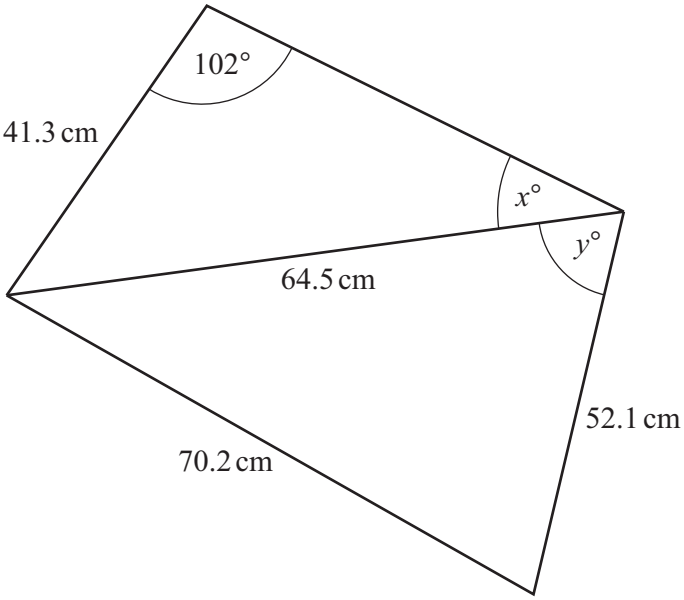

NOT TO SCALE

(a) Calculate the value of x.

View solution

$x =$ ..... [3]

(b) Calculate the value of y.

View solution

$y =$ ..... [3]

19 $f(x) = 5^x$ $g(x) = 3x - 2$ $h(x) = x^2 + 1$

(a) Find $f(5)$.

View solution

..... [1]

(b) Find $g(8x)$.

View solution

..... [1]

(c) Find $g^{-1}(x)$.

View solution

$g^{-1}(x) =$ ..... [2]

(d) Find the positive solution of $gh(x) = 364$.

View solution

$x =$ ..... [3]

(e) Find $ff^{-1}(12)$.

View solution

..... [1]

© UCLES 2025

20 $y = x^3 + 3x^2 - 13x$

(a) Find $\frac{dy}{dx}$.

View solution

..... [2]

(b) Find the gradient of the curve $y = x^3 + 3x^2 - 13x$ at the point where $x = 3$.

View solution

..... [2]

21 A dressmaker takes 75 hours to make 31 dresses.
In week 1, she takes a total of 12 hours 30 minutes to make the first 4 dresses.
In week 2, she makes the remaining 27 dresses at a constant hourly rate.

View solution

Work out the percentage increase in her hourly rate of making dresses from week 1 to week 2.

..... % [4]

© UCLES 2025

22 (a)

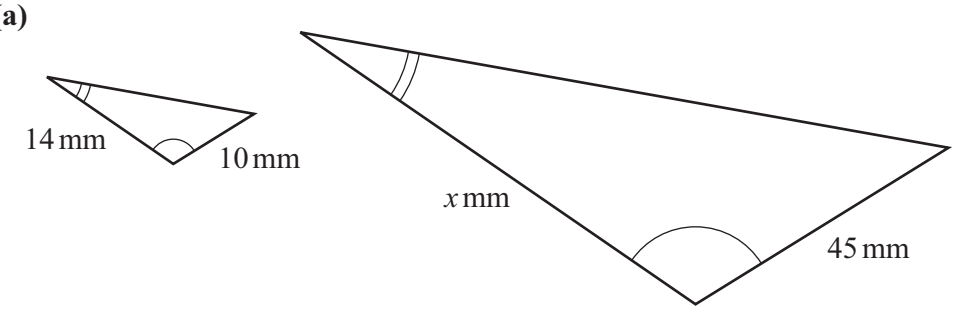

NOT TO SCALE

View solution

The diagram shows two mathematically similar triangles.

Find the value of x.

$x =$ ..... [2]

(b) The surface areas of two mathematically similar containers are 124 cm^2 and 279 cm^2.
The capacity of the smaller container is 56 ml.

View solution

Find the capacity of the larger container.

..... ml [3]

23 The table shows some information about the mass of each of 200 oranges.

Mass (m grams)	$180 < m \leqslant 200$	$200 < m \leqslant 210$	$210 < m \leqslant 215$	$215 < m \leqslant 230$
Frequency	32	64	74	30

View solution

(a) Calculate an estimate of the mean mass of an orange.

..... g [4]

View solution

(b) Sarah draws a histogram to show this information.
The table shows the height of one of the bars for this histogram.

Complete the table.

Mass (m grams)	$180 < m \leqslant 200$	$200 < m \leqslant 210$	$210 < m \leqslant 215$	$215 < m \leqslant 230$
Height of bar (cm)			7.4	

[3]

© UCLES 2025

24

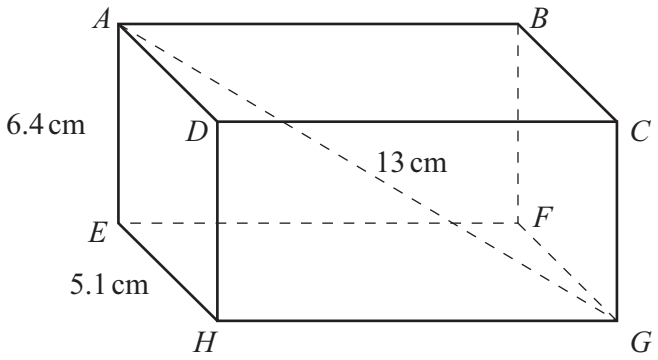

NOT TO SCALE

The diagram shows a cuboid $ABCDEFGH$.
$AE = 6.4$ cm, $EH = 5.1$ cm and $AG = 13$ cm.

(a) Calculate EF.

View solution

$EF =$ ..... cm [3]

(b) Calculate the angle between the line AG and the base $EFGH$ of the cuboid.

View solution

..... [3]

25 Jenna has a length of wire measuring 68 cm, correct to the nearest cm.

View solution

From this wire she cuts off two smaller pieces

- a piece of length 4.7 cm, correct to the nearest mm
- a piece of length 10.0 cm, correct to the nearest mm.

Work out the lower bound and the upper bound for the length of the wire remaining.

Lower bound = ... cm

Upper bound = ... cm

[3]

26

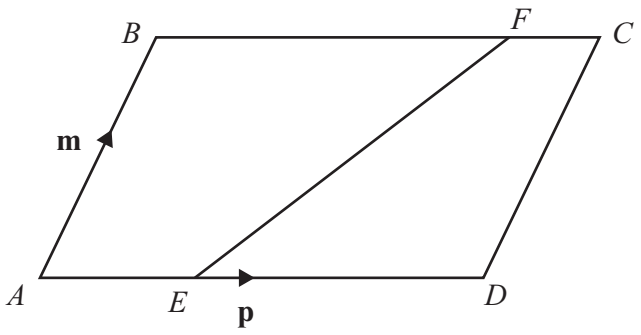

NOT TO SCALE

ABCD is a parallelogram.
$\overrightarrow{AB} = \mathbf{m}$ and $\overrightarrow{AD} = \mathbf{p}$.
F is a point on *BC* and $BF = 4FC$.
E is a point on *AD* and $AE : ED = 1 : 2$.

(a) Find $\overrightarrow{EF}$, in terms of **m** and **p**, in its simplest form.

View solution

..... [3]

(b) *EF* and *DC* are extended to meet at the point *G*.

Find $\overrightarrow{CG}$, in terms of **m** and/or **p**, in its simplest form.

View solution

..... [2]

© UCLES 2025

BLANK PAGE

BLANK PAGE

Permission to reproduce items where third-party owned material protected by copyright is included has been sought and cleared where possible. Every reasonable effort has been made by the publisher (UCLES) to trace copyright holders, but if any items requiring clearance have unwittingly been included, the publisher will be pleased to make amends at the earliest possible opportunity.

To avoid the issue of disclosure of answer-related information to candidates, all copyright acknowledgements are reproduced online in the Cambridge Assessment International Education Copyright Acknowledgements Booklet. This is produced for each series of examinations and is freely available to download at www.cambridgeinternational.org after the live examination series.

Cambridge Assessment International Education is part of Cambridge Assessment. Cambridge Assessment is the brand name of the University of Cambridge Local Examinations Syndicate (UCLES), which is a department of the University of Cambridge.

© UCLES 2025