Cambridge IGCSE

Cambridge International Examinations
Cambridge International General Certificate of Secondary Education

CANDIDATE NAME									
CENTRE NUMBER						CANDIDATE NUMBER				

ADDITIONAL MATHEMATICS **0606/21**

Paper 2 **May/June 2018**

2 hours

Candidates answer on the Question Paper.

Additional Materials: Electronic calculator

READ THESE INSTRUCTIONS FIRST

Write your Centre number, candidate number and name on all the work you hand in.
Write in dark blue or black pen.
You may use an HB pencil for any diagrams or graphs.
Do not use staples, paper clips, glue or correction fluid.
DO **NOT** WRITE IN ANY BARCODES.

Answer **all** the questions.
Give non-exact numerical answers correct to 3 significant figures, or 1 decimal place in the case of angles in degrees, unless a different level of accuracy is specified in the question.
The use of an electronic calculator is expected, where appropriate.
You are reminded of the need for clear presentation in your answers.

At the end of the examination, fasten all your work securely together.
The number of marks is given in brackets [ ] at the end of each question or part question.
The total number of marks for this paper is 80.

This document consists of **15** printed pages and **1** blank page.

© UCLES 2018

CAMBRIDGE International Examinations

Mathematical Formulae

1. ALGEBRA

Quadratic Equation

For the equation $ax^2 + bx + c = 0$,

$$x = \frac{-b \pm \sqrt{b^2 - 4ac}}{2a}$$

Binomial Theorem

$$(a + b)^n = a^n + \binom{n}{1} a^{n-1}\, b + \binom{n}{2} a^{n-2}\, b^2 + \ldots + \binom{n}{r} a^{n-r}\, b^r + \ldots + b^n,$$

where n is a positive integer and $\binom{n}{r} = \frac{n!}{(n-r)!r!}$

2. TRIGONOMETRY

Identities

$$\sin^2 A + \cos^2 A = 1$$

$$\sec^2 A = 1 + \tan^2 A$$

$$\operatorname{cosec}^2 A = 1 + \cot^2 A$$

Formulae for ΔABC

$$\frac{a}{\sin A} = \frac{b}{\sin B} = \frac{c}{\sin C}$$

$$a^2 = b^2 + c^2 - 2bc \cos A$$

$$\Delta = \frac{1}{2} bc \sin A$$

© UCLES 2018

1 A, B and C are subsets of the same universal set.

(i) Write each of the following statements in words.

(a) $A \not\subset B$ [1]

View solution

(b) $A \cap C = \varnothing$ [1]

View solution

(ii) Write each of the following statements in set notation.

(a) There are 3 elements in set A or B or both. [1]

View solution

(b) x is an element of A but it is not an element of C. [1]

View solution

© UCLES 2018

2 The variables x and y are such that $y = \ln(3x - 1)$ for $x > \frac{1}{3}$.

(i) Find $\frac{dy}{dx}$. [2]

View solution

(ii) Hence find the approximate change in x when y increases from $\ln(1.2)$ to $\ln(1.2) + 0.125$. [3]

View solution

© UCLES 2018

3 A 7-character password is to be selected from the 12 characters shown in the table. Each character may be used only once.

	Characters			
Upper-case letters	A	B	C	D
Lower-case letters	e	f	g	h
Digits	1	2	3	4

Find the number of different passwords

(i) if there are no restrictions, [1]

View solution

(ii) that start with a digit, [1]

View solution

(iii) that contain 4 upper-case letters and 3 lower-case letters such that all the upper-case letters are together and all the lower-case letters are together. [3]

View solution

© UCLES 2018

4 Do not use a calculator in this question.

It is given that $x+4$ is a factor of $\mathrm{p}(x) = 2x^3 + 3x^2 + ax - 12$. When $\mathrm{p}(x)$ is divided by $x-1$ the remainder is b.

(i) Show that $a = -23$ and find the value of the constant b. [2]

View solution

(ii) Factorise $\mathrm{p}(x)$ completely and hence state all the solutions of $\mathrm{p}(x) = 0$. [4]

View solution

© UCLES 2018

5 The function f is defined by $\mathrm{f}(x) = \dfrac{1}{2x-5}$ for $x > 2.5$.

(i) Find an expression for $\mathrm{f}^{-1}(x)$. [2]

View solution

(ii) State the domain of $\mathrm{f}^{-1}(x)$. [1]

View solution

(iii) Find an expression for $\mathrm{f}^{2}(x)$, giving your answer in the form $\dfrac{ax+b}{cx+d}$, where a, b, c and d are integers to be found. [3]

View solution

6

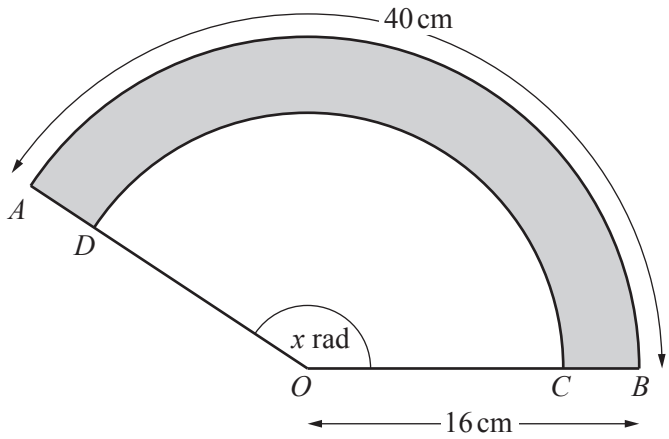

In the diagram AOB and DOC are sectors of a circle centre O. The angle AOB is x radians. The length of the arc AB is 40 cm and the radius OB is 16 cm.

(i) Find the value of x. [2]

View solution

(ii) Find the area of sector AOB. [2]

View solution

(iii) Given that the area of the shaded region $ABCD$ is 140 cm^2, find the length of OC. [3]

View solution

© UCLES 2018

7 Differentiate with respect to x

(i) $4x\tan x$, [2]

View solution

(ii) $\dfrac{e^{3x+1}}{x^2-1}$. [3]

View solution

8 An experiment was carried out recording values of y for certain values of x. The variables x and y are thought to be connected by the relationship $y = ax^n$, where a and n are constants.

(i) Transform the relationship $y = ax^n$ into straight line form. [2]

View solution

The values of $\ln y$ and $\ln x$ were plotted and a line of best fit drawn. This is shown in the diagram below.

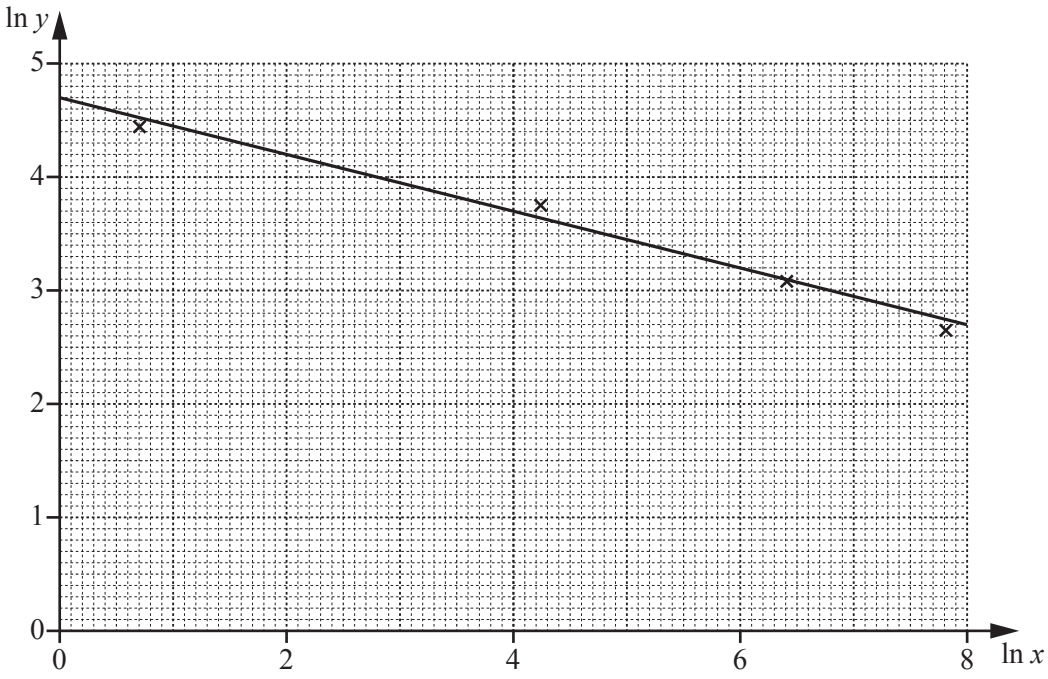

(ii) Use the graph to find the value of a and of n, stating the coordinates of the points that you use. [3]

View solution

(iii) Find the value of x when $y = 50$. [2]

View solution

© UCLES 2018

9 **(i)** Express $5x^2 - 14x - 3$ in the form $p(x+q)^2 + r$, where p, q and r are constants. [3]

View solution

(ii) Sketch the graph of $y = |5x^2 - 14x - 3|$ on the axes below. Show clearly any points where your graph meets the coordinate axes. [4]

View solution

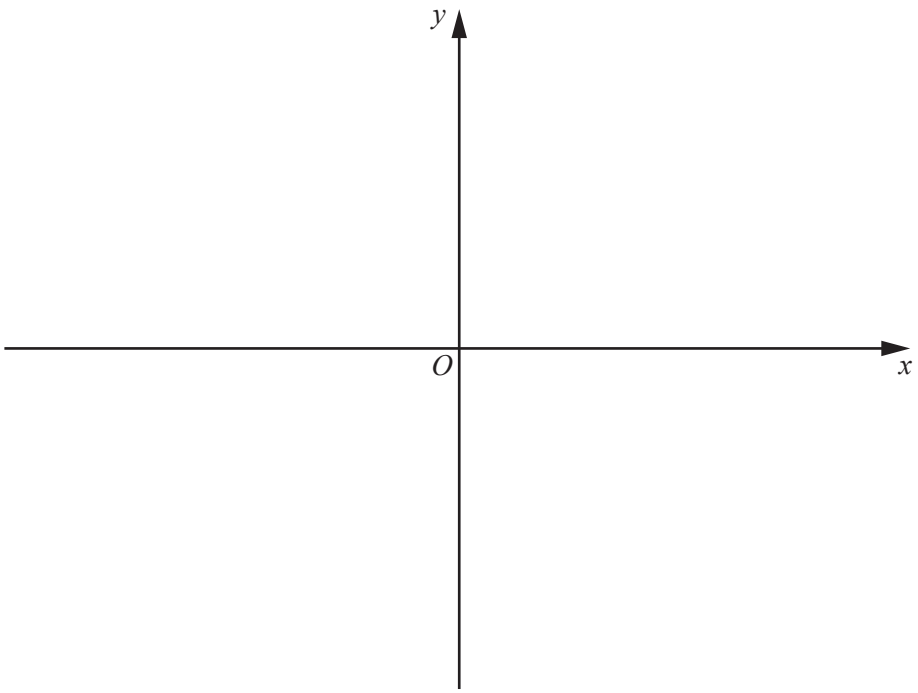

(iii) State the set of values of k for which $|5x^2 - 14x - 3| = k$ has exactly four solutions. [2]

View solution

© UCLES 2018

10 A particle moves in a straight line such that its displacement, s metres, from a fixed point O at time t seconds, is given by $s = 4 + \cos 3t$, where $t \geqslant 0$. The particle is initially at rest.

(i) Find the exact value of t when the particle is next at rest. [2]

View solution

(ii) Find the distance travelled by the particle between $t = \frac{\pi}{4}$ and $t = \frac{\pi}{2}$ seconds. [3]

View solution

(iii) Find the greatest acceleration of the particle. [2]

View solution

© UCLES 2018

11 **(a)** Solve $10\cos^2 x + 3\sin x = 9$ for $0° < x < 360°$. [5]

View solution

(b) Solve $3\tan 2y = 4\sin 2y$ for $0 < y < \pi$ radians. [5]

© UCLES 2018

12 In this question all lengths are in metres.

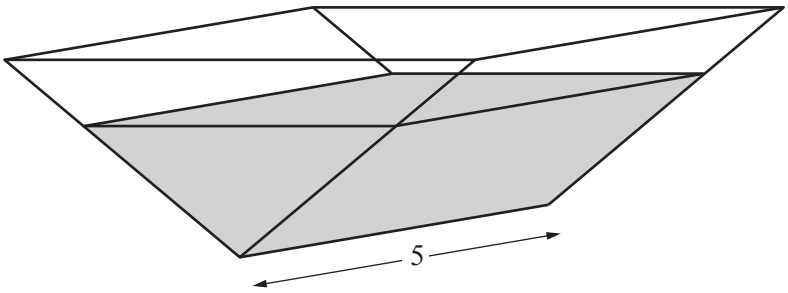

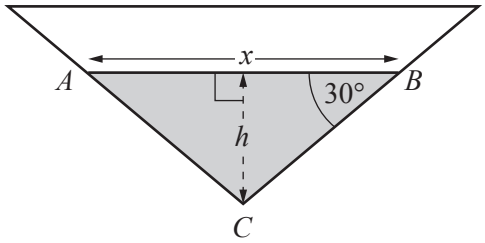

A water container is in the shape of a triangular prism. The diagrams show the container and its cross-section. The cross-section of the water in the container is an isosceles triangle ABC, with angle ABC = angle BAC = 30°. The length of AB is x and the depth of water is h. The length of the container is 5.

(i) Show that $x = 2\sqrt{3}h$ and hence find the volume of water in the container in terms of h. [3]

View solution

(ii) The container is filled at a rate of $0.5\,m^3$ per minute. At the instant when h is 0.25 m, find

(a) the rate at which h is increasing, [4]

View solution

(b) the rate at which x is increasing. [2]

View solution

© UCLES 2018

BLANK PAGE

Permission to reproduce items where third-party owned material protected by copyright is included has been sought and cleared where possible. Every reasonable effort has been made by the publisher (UCLES) to trace copyright holders, but if any items requiring clearance have unwittingly been included, the publisher will be pleased to make amends at the earliest possible opportunity.

To avoid the issue of disclosure of answer-related information to candidates, all copyright acknowledgements are reproduced online in the Cambridge International Examinations Copyright Acknowledgements Booklet. This is produced for each series of examinations and is freely available to download at www.cie.org.uk after the live examination series.

Cambridge International Examinations is part of the Cambridge Assessment Group. Cambridge Assessment is the brand name of University of Cambridge Local Examinations Syndicate (UCLES), which is itself a department of the University of Cambridge.