Cambridge Assessment International Education

Cambridge IGCSE™

CANDIDATE NAME									
CENTRE NUMBER						CANDIDATE NUMBER				

ADDITIONAL MATHEMATICS **0606/22**

Paper 2 **May/June 2021**

2 hours

You must answer on the question paper.

No additional materials are needed.

INSTRUCTIONS

- Answer **all** questions.
- Use a black or dark blue pen. You may use an HB pencil for any diagrams or graphs.
- Write your name, centre number and candidate number in the boxes at the top of the page.
- Write your answer to each question in the space provided.
- Do **not** use an erasable pen or correction fluid.
- Do **not** write on any bar codes.
- You should use a calculator where appropriate.
- You must show all necessary working clearly; no marks will be given for unsupported answers from a calculator.
- Give non-exact numerical answers correct to 3 significant figures, or 1 decimal place for angles in degrees, unless a different level of accuracy is specified in the question.

INFORMATION

- The total mark for this paper is 80.
- The number of marks for each question or part question is shown in brackets [ ].

© UCLES 2021

Mathematical Formulae

1. ALGEBRA

Quadratic Equation

For the equation $ax^2 + bx + c = 0$,

$$x = \frac{-b \pm \sqrt{b^2 - 4ac}}{2a}$$

Binomial Theorem

$$(a+b)^n = a^n + \binom{n}{1}a^{n-1}b + \binom{n}{2}a^{n-2}b^2 + \ldots + \binom{n}{r}a^{n-r}b^r + \ldots + b^n$$

where n is a positive integer and $\binom{n}{r} = \frac{n!}{(n-r)!r!}$

Arithmetic series $u_n = a + (n-1)d$

$$S_n = \frac{1}{2}n(a+l) = \frac{1}{2}n\{2a + (n-1)d\}$$

Geometric series $u_n = ar^{n-1}$

$$S_n = \frac{a(1-r^n)}{1-r} \quad (r \neq 1)$$

$$S_\infty = \frac{a}{1-r} \quad (|r| < 1)$$

2. TRIGONOMETRY

Identities

$$\sin^2 A + \cos^2 A = 1$$
$$\sec^2 A = 1 + \tan^2 A$$
$$\operatorname{cosec}^2 A = 1 + \cot^2 A$$

Formulae for ΔABC

$$\frac{a}{\sin A} = \frac{b}{\sin B} = \frac{c}{\sin C}$$

$$a^2 = b^2 + c^2 - 2bc\cos A$$

$$\Delta = \frac{1}{2}bc\sin A$$

© UCLES 2021

1 Using the binomial theorem, expand $(1+e^{2x})^4$, simplifying each term. [2]

View solution

2 On the axes, sketch the graph of $y = 3(x-3)(x-1)(x+2)$ stating the intercepts with the coordinate axes. [3]

View solution

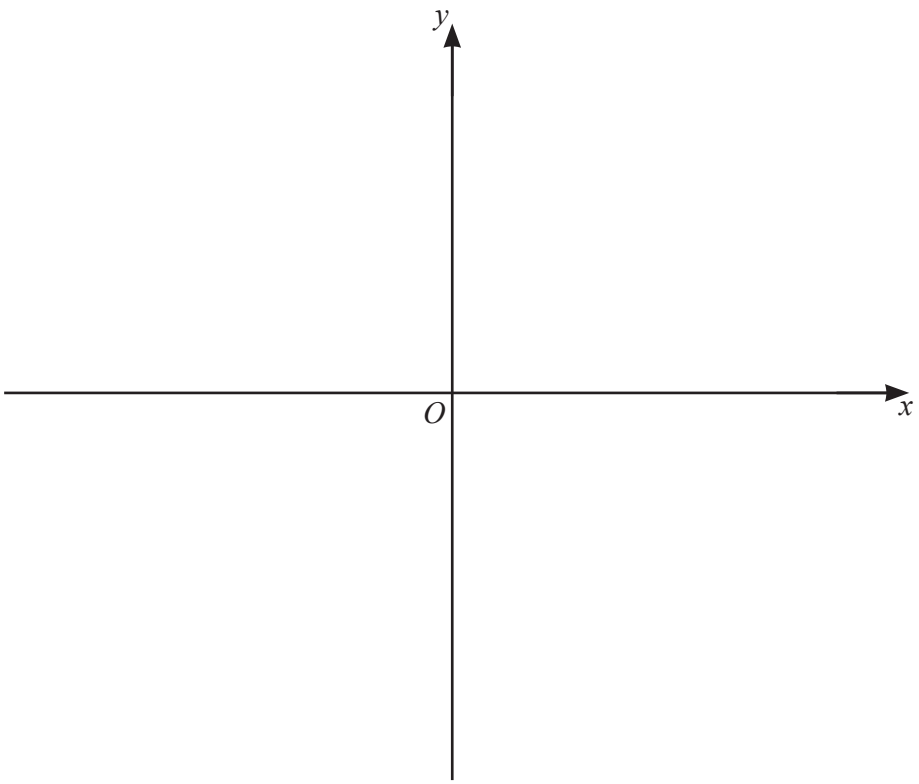

© UCLES 2021

3 Find the values of the constant k for which $(2k-1)x^2+6x+k+1=0$ has real roots. [5]

View solution

4 The polynomial $\mathrm{p}(x) = mx^3 - 29x^2 + 39x + n$, where m and n are constants, has a factor $3x - 1$, and remainder 6 when divided by $x - 1$. Show that $x - 2$ is a factor of $\mathrm{p}(x)$. [6]

View solution

5 The function f is defined, for $0° \leqslant x \leqslant 810°$, by $\mathrm{f}(x) = -2 + \cos\frac{2x}{3}$.

(a) Write down the amplitude of f. [1]

View solution

(b) Find the period of f. [2]

View solution

(c) On the axes, sketch the graph of $y = \mathrm{f}(x)$. [2]

View solution

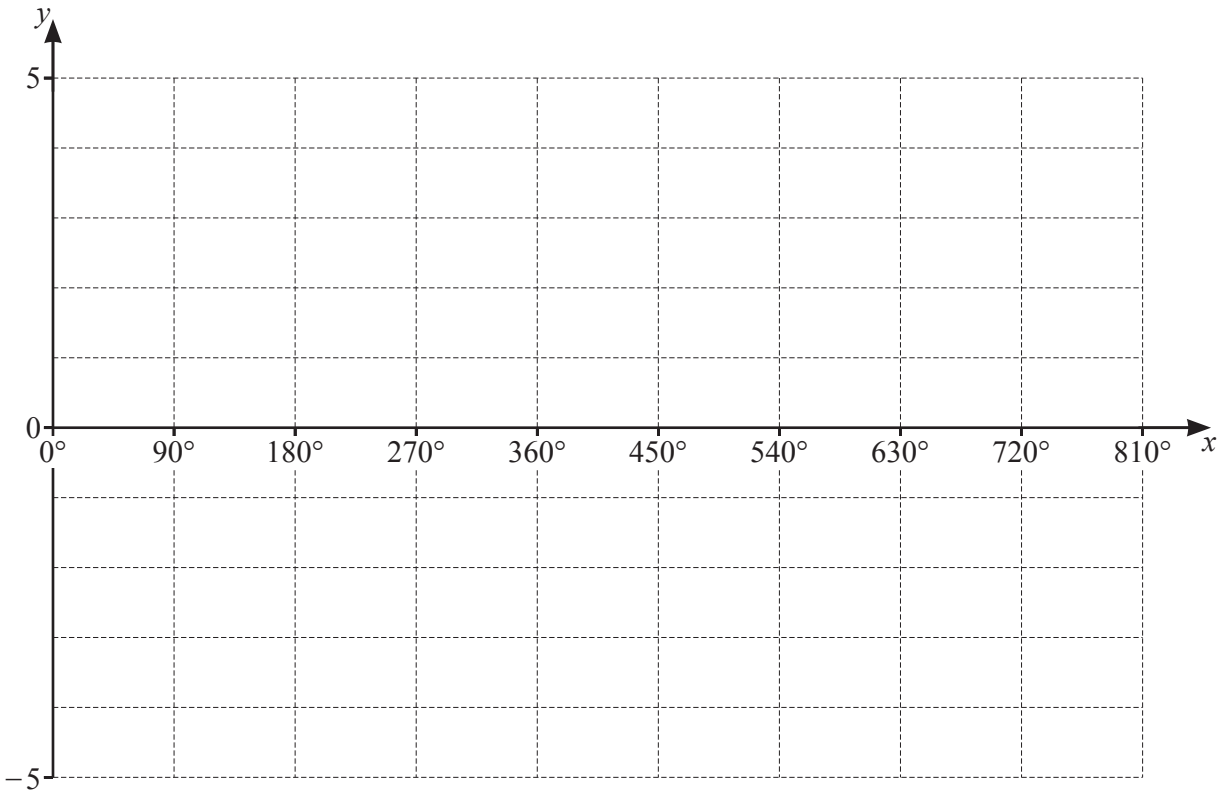

6 The points $A(5, -4)$ and $C(11, 6)$ are such that AC is the diagonal of a square, $ABCD$.

(a) Find the length of the line AC. [2]

View solution

(b) (i) The coordinates of the centre, E, of the square are $(8, y)$. Find the value of y. [1]

View solution

(ii) Find the equation of the diagonal BD. [3]

View solution

(iii) Given that the x-coordinate of B is less than the x-coordinate of D, write $\overrightarrow{EB}$ and $\overrightarrow{ED}$ as column vectors. [2]

View solution

© UCLES 2021

7

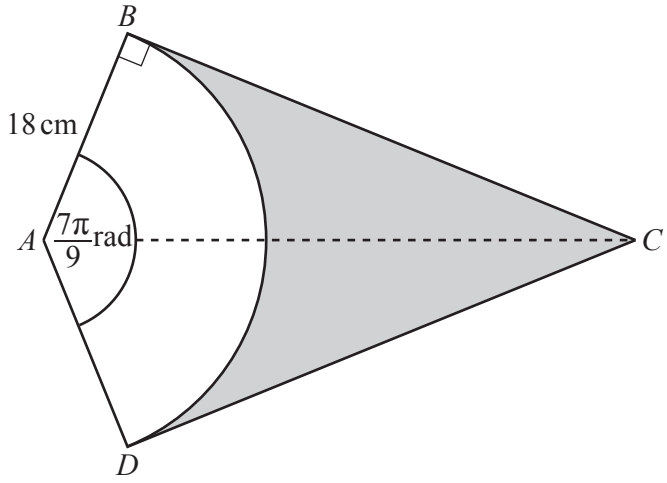

DAB is a sector of a circle, centre *A*, radius 18 cm. The lines *CB* and *CD* are tangents to the circle. Angle *DAB* is $\frac{7\pi}{9}$ radians.

(a) Find the perimeter of the shaded region. [3]

View solution

(b) Find the area of the shaded region. [3]

View solution

© UCLES 2021

8 A particle moves in a straight line so that, t seconds after passing through a fixed point O, its velocity, $v\,\text{ms}^{-1}$, is given by $v = 3t^2 - 30t + 72$.

(a) Find the distance between the particle's two positions of instantaneous rest. [6]

View solution

(b) Find the acceleration of the particle when $t = 2$. [2]

View solution

9 Solve the following simultaneous equations.

$$4x^2 + 3xy + y^2 = 8$$
$$xy + 4 = 0$$

View solution

[6]

10 **(a)** Find $\int (e^{x+1})^3 dx$. [2]

View solution

(b) **(i)** Differentiate, with respect to x, $y = x \sin 4x$. [2]

View solution

(ii) Hence show that $\int_{\frac{\pi}{4}}^{\frac{\pi}{3}} 4x \cos 4x dx = \frac{1}{8} - \frac{\pi\sqrt{3}}{6}$. [4]

View solution

11 In this question all lengths are in centimetres.

The volume and surface area of a sphere of radius r are $\frac{4}{3}\pi r^3$ and $4\pi r^2$ respectively.

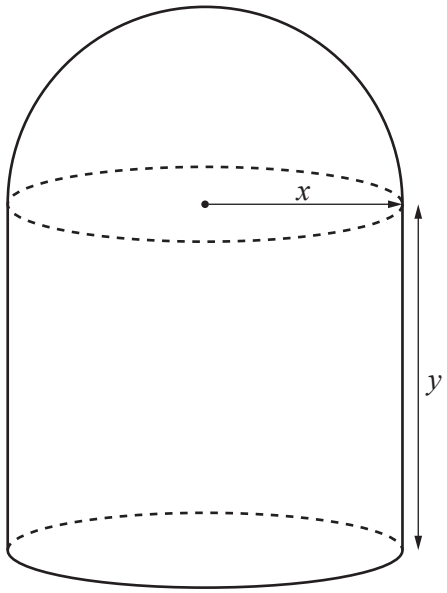

The diagram shows a solid object made from a hemisphere of radius x and a cylinder of radius x and height y. The volume of the object is $500\,\text{cm}^3$.

(a) Find an expression for y in terms of x and show that the surface area, S, of the object is given by $S = \frac{5}{3}\pi x^2 + \frac{1000}{x}$. [4]

View solution

(b) Given that x can vary and that S has a minimum value, find the value of x for which S is a minimum.

[4]

View solution

12 DO NOT USE A CALCULATOR IN THIS QUESTION.

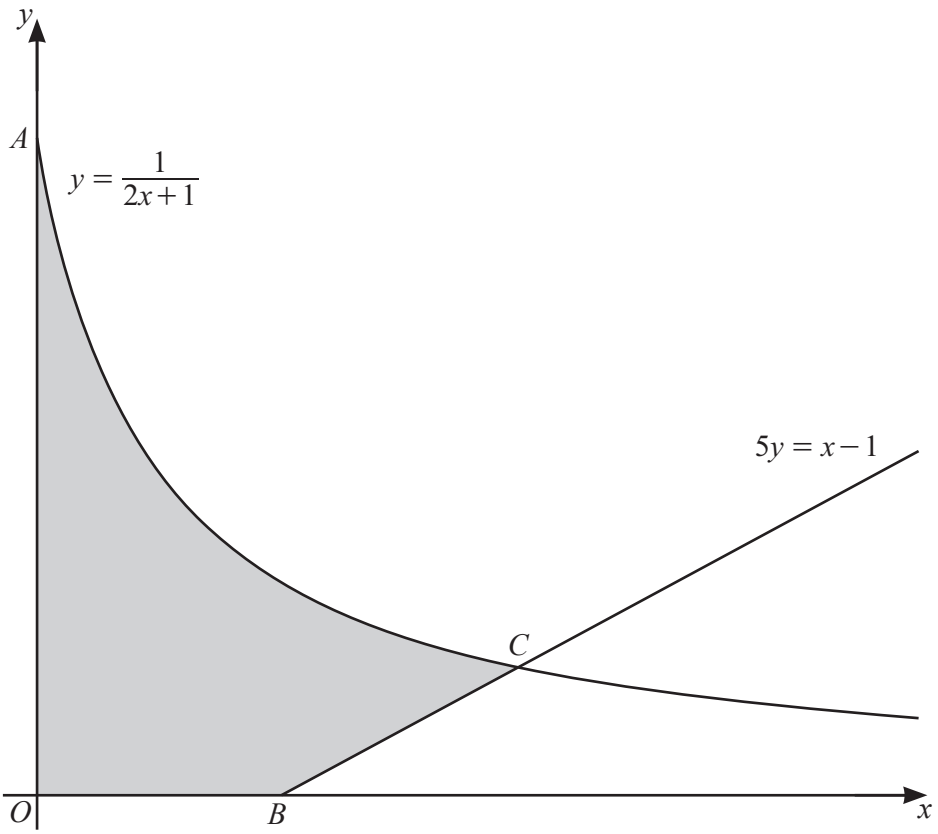

The diagram shows part of the curve $y = \frac{1}{2x+1}$ and part of the line $5y = x - 1$.

The curve meets the y-axis at point A. The line meets the x-axis at point B. The line and curve intersect at point C.

(a) (i) Find the coordinates of A and B. [1]

View solution

(ii) Verify that the x-coordinate of C is 2. [2]

View solution

(b) Find the exact area of the shaded region. [5]

View solution

Question 13 is printed on the next page.

13 The functions f and g are defined, for $x > 0$, by

$$\mathrm{f}(x) = \frac{2x^2 - 1}{3x},$$

$$\mathrm{g}(x) = \frac{1}{x}.$$

(a) Find and simplify an expression for $\mathrm{fg}(x)$. [2]

View solution

(b) **(i)** Given that f^{-1} exists, write down the range of f^{-1}. [1]

View solution

(ii) Show that $\mathrm{f}^{-1}(x) = \frac{px + \sqrt{qx^2 + r}}{4}$, where p, q and r are integers. [4]

View solution

Permission to reproduce items where third-party owned material protected by copyright is included has been sought and cleared where possible. Every reasonable effort has been made by the publisher (UCLES) to trace copyright holders, but if any items requiring clearance have unwittingly been included, the publisher will be pleased to make amends at the earliest possible opportunity.

To avoid the issue of disclosure of answer-related information to candidates, all copyright acknowledgements are reproduced online in the Cambridge Assessment International Education Copyright Acknowledgements Booklet. This is produced for each series of examinations and is freely available to download at www.cambridgeinternational.org after the live examination series.

Cambridge Assessment International Education is part of the Cambridge Assessment Group. Cambridge Assessment is the brand name of the University of Cambridge Local Examinations Syndicate (UCLES), which itself is a department of the University of Cambridge.

© UCLES 2021