Cambridge IGCSE

Cambridge International Examinations
Cambridge International General Certificate of Secondary Education

CANDIDATE NAME									
CENTRE NUMBER						CANDIDATE NUMBER				

ADDITIONAL MATHEMATICS **0606/13**

Paper 1 **October/November 2017**

2 hours

Candidates answer on the Question Paper.

Additional Materials: Electronic calculator

READ THESE INSTRUCTIONS FIRST

Write your Centre number, candidate number and name on all the work you hand in.
Write in dark blue or black pen.
You may use an HB pencil for any diagrams or graphs.
Do not use staples, paper clips, glue or correction fluid.
DO **NOT** WRITE IN ANY BARCODES.

Answer **all** the questions.
Give non-exact numerical answers correct to 3 significant figures, or 1 decimal place in the case of angles in degrees, unless a different level of accuracy is specified in the question.
The use of an electronic calculator is expected, where appropriate.
You are reminded of the need for clear presentation in your answers.

At the end of the examination, fasten all your work securely together.
The number of marks is given in brackets [ ] at the end of each question or part question.
The total number of marks for this paper is 80.

This document consists of **15** printed pages and **1** blank page.

© UCLES 2017

Mathematical Formulae

1. ALGEBRA

Quadratic Equation

For the equation $ax^2 + bx + c = 0$,

$$x = \frac{-b \pm \sqrt{b^2 - 4ac}}{2a}$$

Binomial Theorem

$$(a + b)^n = a^n + \binom{n}{1} a^{n-1} b + \binom{n}{2} a^{n-2} b^2 + \ldots + \binom{n}{r} a^{n-r} b^r + \ldots + b^n,$$

where n is a positive integer and $\binom{n}{r} = \frac{n!}{(n-r)!r!}$

2. TRIGONOMETRY

Identities

$$\sin^2 A + \cos^2 A = 1$$

$$\sec^2 A = 1 + \tan^2 A$$

$$\operatorname{cosec}^2 A = 1 + \cot^2 A$$

Formulae for ΔABC

$$\frac{a}{\sin A} = \frac{b}{\sin B} = \frac{c}{\sin C}$$

$$a^2 = b^2 + c^2 - 2bc \cos A$$

$$\Delta = \frac{1}{2} bc \sin A$$

© UCLES 2017

1 Given that $y = 2\sec^2\theta$ and $x = \tan\theta - 5$, express y in terms of x. [2]

View solution

2 A curve is such that its gradient at the point (x, y) is given by $10e^{5x} + 3$. Given that the curve passes though the point (0, 9), find the equation of the curve. [4]

View solution

© UCLES 2017

3 Find the set of values of k for which the equation $kx^2 + 3x - 4 + k = 0$ has no real roots. [4]

View solution

4 The graph of $y = a\cos(bx) + c$ has an amplitude of 3, a period of $\frac{\pi}{4}$ and passes through the point $\left(\frac{\pi}{12}, \frac{5}{2}\right)$. Find the value of each of the constants a, b and c. [4]

View solution

© UCLES 2017

5 **(i)** Find $\int (7x-10)^{-\frac{3}{5}}\,\mathrm{d}x$. [2]

View solution

(ii) Given that $\int_6^a (7x-10)^{-\frac{3}{5}}\,\mathrm{d}x = \frac{25}{14}$, find the exact value of a. [3]

View solution

© UCLES 2017

6 When $\ln y$ is plotted against x^2 a straight line is obtained which passes through the points (0.2, 2.4) and (0.8, 0.9).

(i) Express $\ln y$ in the form $px^2 + q$, where p and q are constants. [3]

View solution

(ii) Hence express y in terms of z, where $z = e^{x^2}$. [3]

View solution

7 **(i)** Find, in ascending powers of x, the first 3 terms in the expansion of $\left(2-\frac{x^2}{4}\right)^6$. Give each term in its simplest form. [3]

View solution

(ii) Hence find the coefficient of x^2 in the expansion of $\left(2-\frac{x^2}{4}\right)^6\left(\frac{1}{x}+x\right)^2$. [4]

View solution

8 It is given that $y = (x-4)(3x-1)^{\frac{5}{3}}$.

(i) Show that $\dfrac{\mathrm{d}y}{\mathrm{d}x} = (3x-1)^{\frac{2}{3}}(Ax+B)$, where A and B are integers to be found. [5]

View solution

(ii) Hence find, in terms of h, where h is small, the approximate change in y when x increases from 3 to $3 + h$. [3]

View solution

9 **(a)** A 6-digit number is to be formed using the digits 1, 3, 5, 6, 8, 9. Each of these digits may be used only once in any 6-digit number. Find how many different 6-digit numbers can be formed if

(i) there are no restrictions, [1]

View solution

(ii) the number formed is even, [1]

View solution

(iii) the number formed is even and greater than 300 000. [3]

View solution

(b) Ruby wants to have a party for her friends. She can only invite 8 of her 15 friends.

View solution

(i) Find the number of different ways she can choose her friends for the party if there are no restrictions. [1]

Two of her 15 friends are twins who cannot be separated.

(ii) Find the number of different ways she can now choose her friends for the party. [3]

View solution

© UCLES 2017

10 **(a)** Given that $\mathbf{A} = \begin{pmatrix} 4 & -1 \\ a & b \end{pmatrix}$, $\mathbf{B} = \begin{pmatrix} 2 & 3 \\ -5 & 4 \end{pmatrix}$ and $\mathbf{AB} = \begin{pmatrix} 13 & 8 \\ 18 & 4 \end{pmatrix}$, find the value of a and of b. [4]

View solution

(b) It is given that $\mathbf{X} = \begin{pmatrix} 3 & -5 \\ -4 & 1 \end{pmatrix}$, $\mathbf{Y} = \begin{pmatrix} -1 & 2 \\ 4 & 0 \end{pmatrix}$ and $\mathbf{XZ} = \mathbf{Y}$.

(i) Find $\mathbf{X}^{-1}$. [2]

View solution

(ii) Hence find $\mathbf{Z}$. [3]

View solution

11

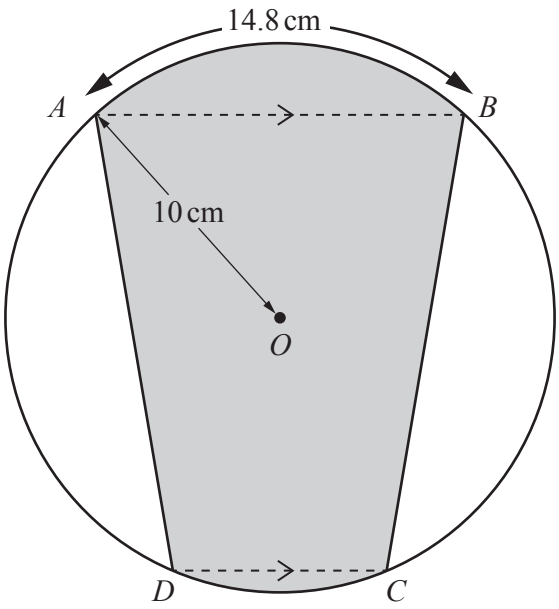

The diagram shows a circle, centre O, radius 10 cm. The points A, B, C and D lie on the circumference of the circle such that AB is parallel to DC. The length of the minor arc AB is 14.8 cm. The area of the minor sector ODC is 21.8 cm^2.

(i) Write down, in radians, angle AOB. [1]

View solution

(ii) Find, in radians, angle DOC. [2]

View solution

© UCLES 2017

(iii) Find the perimeter of the shaded region. [4]

View solution

(iv) Find the area of the shaded region. [3]

View solution

12 The line $y = 2x + 1$ intersects the curve $xy = 14 - 2y$ at the points P and Q. The midpoint of the line PQ is the point M.

(i) Show that the point $\left(-10,\ \frac{23}{8}\right)$ lies on the perpendicular bisector of PQ. [9]

View solution

The line PQ intersects the y-axis at the point R. The perpendicular bisector of PQ intersects the y-axis at the point S.

(ii) Find the area of the triangle RSM. [3]

View solution

BLANK PAGE

Permission to reproduce items where third-party owned material protected by copyright is included has been sought and cleared where possible. Every reasonable effort has been made by the publisher (UCLES) to trace copyright holders, but if any items requiring clearance have unwittingly been included, the publisher will be pleased to make amends at the earliest possible opportunity.

To avoid the issue of disclosure of answer-related information to candidates, all copyright acknowledgements are reproduced online in the Cambridge International Examinations Copyright Acknowledgements Booklet. This is produced for each series of examinations and is freely available to download at www.cie.org.uk after the live examination series.

Cambridge International Examinations is part of the Cambridge Assessment Group. Cambridge Assessment is the brand name of University of Cambridge Local Examinations Syndicate (UCLES), which is itself a department of the University of Cambridge.