Cambridge Assessment International Education

# Cambridge IGCSE™

| | | | | | | | | | |
|---|---|---|---|---|---|---|---|---|---|
| CANDIDATE NAME | | | | | | | | | |
| CENTRE NUMBER | | | | | | CANDIDATE NUMBER | | | | |

**ADDITIONAL MATHEMATICS** **0606/12**

Paper 1 **October/November 2020**

**2 hours**

You must answer on the question paper.

No additional materials are needed.

**INSTRUCTIONS**

- Answer **all** questions.
- Use a black or dark blue pen. You may use an HB pencil for any diagrams or graphs.
- Write your name, centre number and candidate number in the boxes at the top of the page.
- Write your answer to each question in the space provided.
- Do **not** use an erasable pen or correction fluid.
- Do **not** write on any bar codes.
- You should use a calculator where appropriate.
- You must show all necessary working clearly; no marks will be given for unsupported answers from a calculator.
- Give non-exact numerical answers correct to 3 significant figures, or 1 decimal place for angles in degrees, unless a different level of accuracy is specified in the question.

**INFORMATION**

- The total mark for this paper is 80.
- The number of marks for each question or part question is shown in brackets [ ].

This document has **16** pages. Blank pages are indicated.

© UCLES 2020

***Mathematical Formulae***

## 1. ALGEBRA

*Quadratic Equation*

For the equation $ax^2 + bx + c = 0$,

$$x = \frac{-b \pm \sqrt{b^2 - 4ac}}{2a}$$

*Binomial Theorem*

$$(a+b)^n = a^n + \binom{n}{1}a^{n-1}b + \binom{n}{2}a^{n-2}b^2 + \ldots + \binom{n}{r}a^{n-r}b^r + \ldots + b^n$$

where $n$ is a positive integer and $\binom{n}{r} = \frac{n!}{(n-r)!r!}$

*Arithmetic series* $u_n = a + (n-1)d$

$$S_n = \frac{1}{2}n(a+l) = \frac{1}{2}n\{2a + (n-1)d\}$$

*Geometric series* $u_n = ar^{n-1}$

$$S_n = \frac{a(1-r^n)}{1-r} \quad (r \neq 1)$$

$$S_\infty = \frac{a}{1-r} \quad (|r| < 1)$$

## 2. TRIGONOMETRY

*Identities*

$$\sin^2 A + \cos^2 A = 1$$
$$\sec^2 A = 1 + \tan^2 A$$
$$\operatorname{cosec}^2 A = 1 + \cot^2 A$$

*Formulae for $\Delta ABC$*

$$\frac{a}{\sin A} = \frac{b}{\sin B} = \frac{c}{\sin C}$$

$$a^2 = b^2 + c^2 - 2bc\cos A$$

$$\Delta = \frac{1}{2}bc\sin A$$

© UCLES 2020

**1** The curve $y = 2x^2 + k + 4$ intersects the straight line $y = (k+4)x$ at two distinct points. Find the possible values of $k$. [4]

View solution

**2**

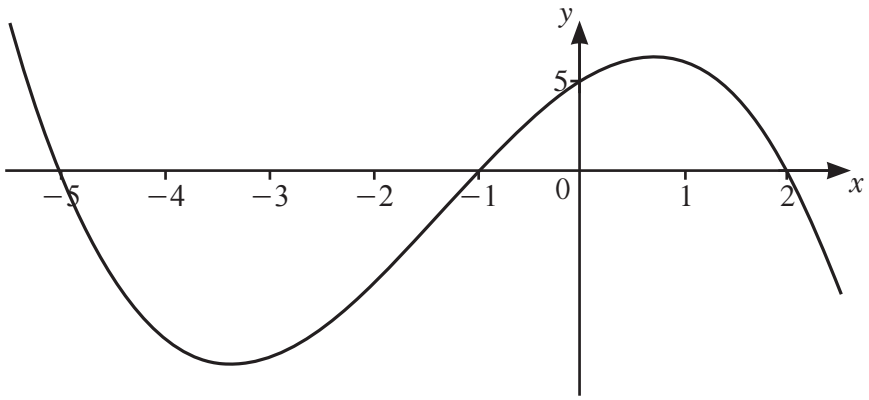


The diagram shows the graph of $y = \mathrm{f}(x)$, where $\mathrm{f}(x)$ is a cubic polynomial.

**(a)** Find $\mathrm{f}(x)$. [3]

View solution

**(b)** Write down the values of $x$ such that $\mathrm{f}(x) < 0$. [2]

View solution

**3** **(a)** Write down the amplitude of $2\cos\frac{x}{3}-1$. [1]

View solution

**(b)** Write down the period of $2\cos\frac{x}{3}-1$. [1]

View solution

**(c)** On the axes below, sketch the graph of $y=2\cos\frac{x}{3}-1$ for $-\pi \leqslant x \leqslant 3\pi$ radians.

View solution

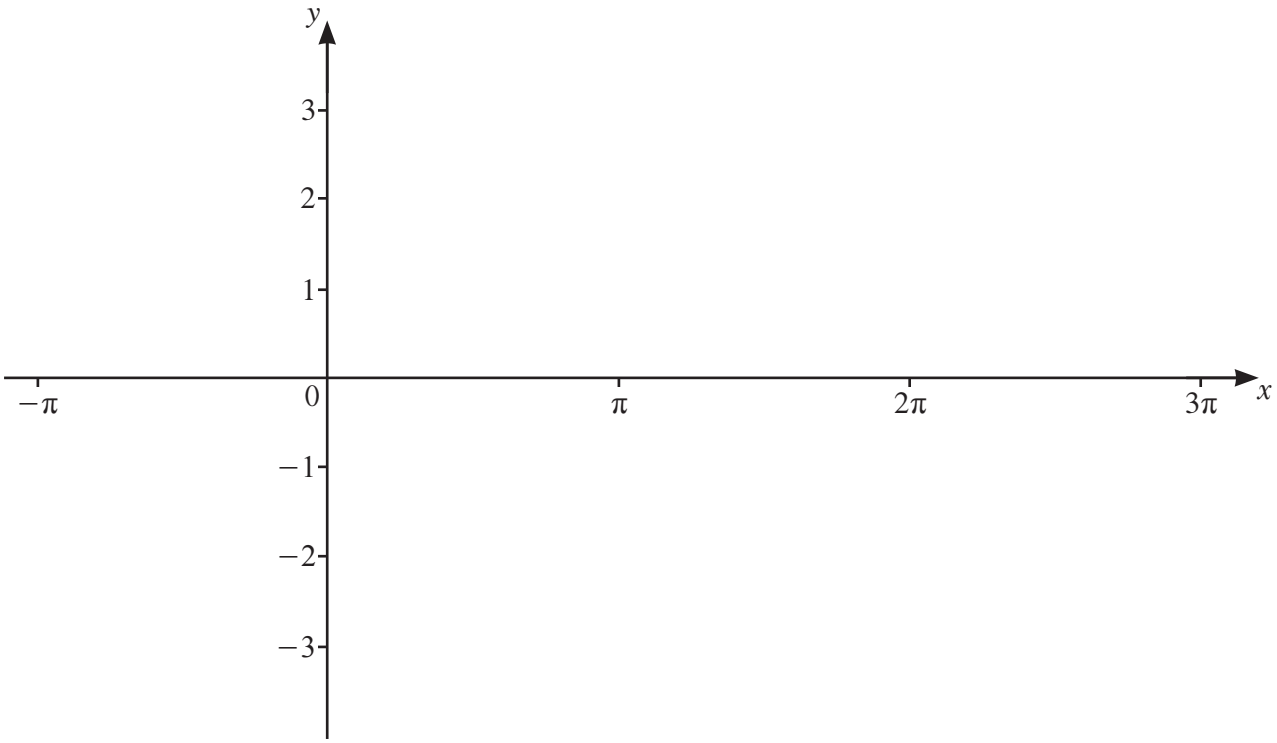


[3]

**4** The 7th and 10th terms of an arithmetic progression are 158 and 149 respectively.

**(a)** Find the common difference and the first term of the progression. [3]

View solution

**(b)** Find the least number of terms of the progression for their sum to be negative. [3]

View solution

© UCLES 2020

**5** Find the coefficient of $x^2$ in the expansion of $\left(x-\frac{3}{x}\right)\left(x+\frac{2}{x}\right)^5$. [5]

View solution

**6** $f(x) = x^2 + 2x - 3 \quad \text{for } x \geqslant -1$

**(a)** Given that the minimum value of $x^2 + 2x - 3$ occurs when $x = -1$, explain why $f(x)$ has an inverse.

[1]

View solution

**(b)** On the axes below, sketch the graph of $y = f(x)$ and the graph of $y = f^{-1}(x)$. Label each graph and state the intercepts on the coordinate axes.

View solution

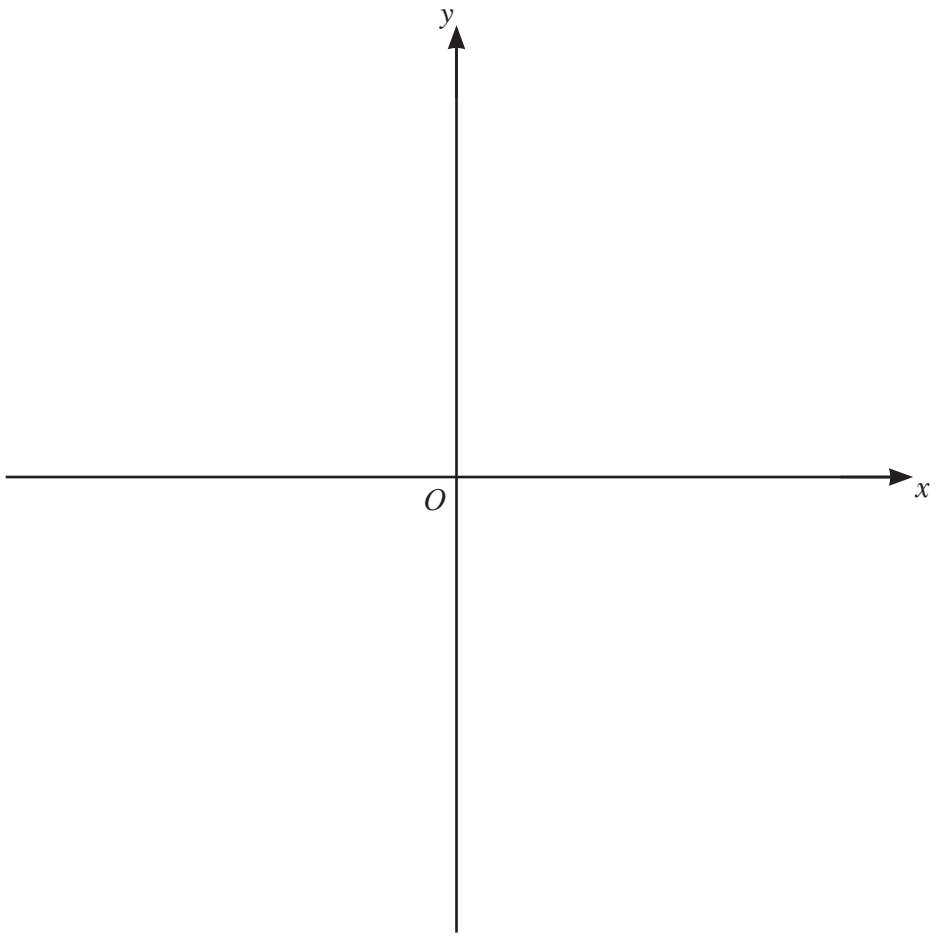


[4]

**7** A curve has equation $y = \dfrac{\ln\left(3x^2 - 5\right)}{2x + 1}$ for $3x^2 > 5$.

**(a)** Find the equation of the normal to the curve at the point where $x = \sqrt{2}$. [6]

View solution

**(b)** Find the approximate change in $y$ as $x$ increases from $\sqrt{2}$ to $\sqrt{2} + h$, where $h$ is small. [1]

View solution

© UCLES 2020

**8** **(a)** Find the number of ways in which 12 people can be put into 3 groups containing 3, 4 and 5 people respectively. [3]

View solution

**(b)** 4-digit numbers are to be formed using four of the digits 2, 3, 7, 8 and 9. Each digit may be used once only in any 4-digit number. Find how many 4-digit numbers can be formed if

**(i)** there are no restrictions, [1]

View solution

**(ii)** the number is even, [1]

View solution

**(iii)** the number is greater than 7000 and odd. [3]

View solution

© UCLES 2020

**9** A curve has equation $y = (2x-1)\sqrt{4x+3}$.

**(a)** Show that $\frac{dy}{dx} = \frac{4(Ax+B)}{\sqrt{4x+3}}$, where $A$ and $B$ are constants. [5]

View solution

**(b)** Hence write down the $x$-coordinate of the stationary point of the curve. [1]

View solution

**(c)** Determine the nature of this stationary point. [2]

View solution

**10** The polynomial $\mathrm{p}(x) = 6x^3 + ax^2 + bx + 2$, where $a$ and $b$ are integers, has a factor of $x - 2$.

**(a)** Given that $\mathrm{p}(1) = -2\mathrm{p}(0)$, find the value of $a$ and of $b$. [4]

View solution

**(b)** Using your values of $a$ and $b$,

View solution

**(i)** find the remainder when $\mathrm{p}(x)$ is divided by $2x - 1$, [2]

**(ii)** factorise $\mathrm{p}(x)$. [2]

View solution

**11** In this question all lengths are in centimetres and all angles are in radians.

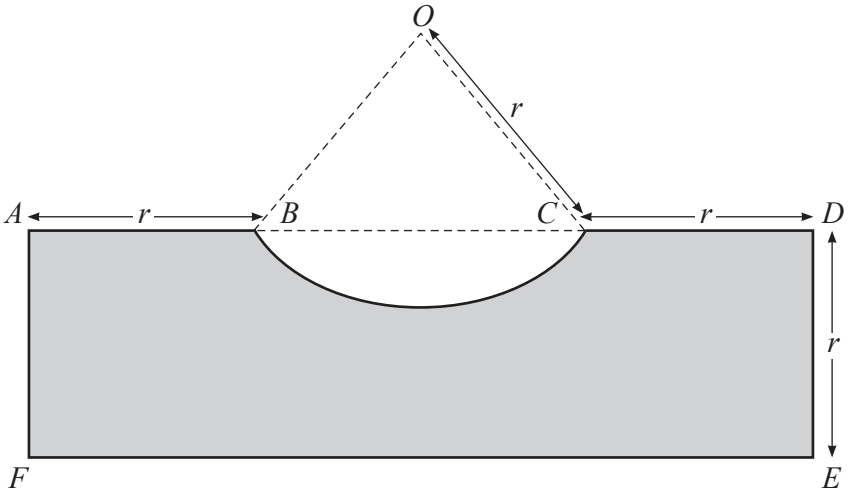


The diagram shows the rectangle $ADEF$, where $AF = DE = r$. The points $B$ and $C$ lie on $AD$ such that $AB = CD = r$. The curve $BC$ is an arc of the circle, centre $O$, radius $r$ and has a length of $1.5r$.

**(a)** Show that the perimeter of the shaded region is $(7.5 + 2\sin 0.75)r$. [5]

View solution

**(b)** Find the area of the shaded region, giving your answer in the form $kr^2$, where $k$ is a constant correct to 2 decimal places. [4]

View solution

**12 (a)**

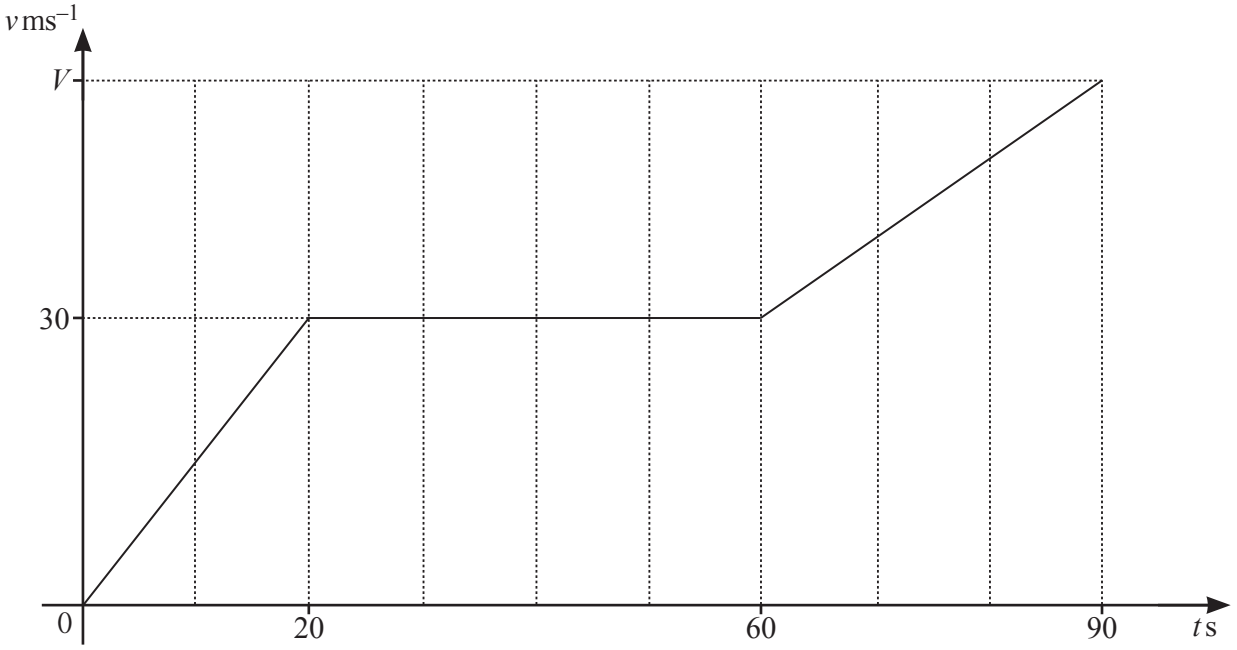


The diagram shows the velocity–time graph of a particle $P$ that travels 2775 m in 90 s, reaching a final velocity of $V$ ms$^{-1}$.

**(i)** Find the value of $V$. [3]

**(ii)** Write down the acceleration of $P$ when $t = 40$. [1]

**(b)** The acceleration, $a$ ms$^{-2}$, of a particle $Q$ travelling in a straight line, is given by $a = 6\cos 2t$ at time $t$ s. When $t = 0$ the particle is at point $O$ and is travelling with a velocity of $10$ ms$^{-1}$.

**(i)** Find the velocity of $Q$ at time $t$. [3]

View solution

**(ii)** Find the displacement of $Q$ from $O$ at time $t$. [3]

View solution

**BLANK PAGE**

Permission to reproduce items where third-party owned material protected by copyright is included has been sought and cleared where possible. Every reasonable effort has been made by the publisher (UCLES) to trace copyright holders, but if any items requiring clearance have unwittingly been included, the publisher will be pleased to make amends at the earliest possible opportunity.

To avoid the issue of disclosure of answer-related information to candidates, all copyright acknowledgements are reproduced online in the Cambridge Assessment International Education Copyright Acknowledgements Booklet. This is produced for each series of examinations and is freely available to download at www.cambridgeinternational.org after the live examination series.

Cambridge Assessment International Education is part of the Cambridge Assessment Group. Cambridge Assessment is the brand name of the University of Cambridge Local Examinations Syndicate (UCLES), which itself is a department of the University of Cambridge.