Cambridge Assessment International Education

Cambridge IGCSE™

CANDIDATE NAME									
CENTRE NUMBER						CANDIDATE NUMBER				

ADDITIONAL MATHEMATICS **0606/12**

Paper 1 **October/November 2021**

2 hours

You must answer on the question paper.

No additional materials are needed.

INSTRUCTIONS

- Answer **all** questions.
- Use a black or dark blue pen. You may use an HB pencil for any diagrams or graphs.
- Write your name, centre number and candidate number in the boxes at the top of the page.
- Write your answer to each question in the space provided.
- Do **not** use an erasable pen or correction fluid.
- Do **not** write on any bar codes.
- You should use a calculator where appropriate.
- You must show all necessary working clearly; no marks will be given for unsupported answers from a calculator.
- Give non-exact numerical answers correct to 3 significant figures, or 1 decimal place for angles in degrees, unless a different level of accuracy is specified in the question.

INFORMATION

- The total mark for this paper is 80.
- The number of marks for each question or part question is shown in brackets [ ].

© UCLES 2021

Mathematical Formulae

1. ALGEBRA

Quadratic Equation

For the equation $ax^2 + bx + c = 0$,

$$x = \frac{-b \pm \sqrt{b^2 - 4ac}}{2a}$$

Binomial Theorem

$$(a+b)^n = a^n + \binom{n}{1}a^{n-1}b + \binom{n}{2}a^{n-2}b^2 + \ldots + \binom{n}{r}a^{n-r}b^r + \ldots + b^n$$

where n is a positive integer and $\binom{n}{r} = \frac{n!}{(n-r)!r!}$

Arithmetic series

$$u_n = a + (n-1)d$$

$$S_n = \frac{1}{2}n(a+l) = \frac{1}{2}n\{2a + (n-1)d\}$$

Geometric series

$$u_n = ar^{n-1}$$

$$S_n = \frac{a(1-r^n)}{1-r} \quad (r \neq 1)$$

$$S_\infty = \frac{a}{1-r} \quad (|r| < 1)$$

2. TRIGONOMETRY

Identities

$$\sin^2 A + \cos^2 A = 1$$
$$\sec^2 A = 1 + \tan^2 A$$
$$\operatorname{cosec}^2 A = 1 + \cot^2 A$$

Formulae for ΔABC

$$\frac{a}{\sin A} = \frac{b}{\sin B} = \frac{c}{\sin C}$$

$$a^2 = b^2 + c^2 - 2bc\cos A$$

$$\Delta = \frac{1}{2}bc\sin A$$

© UCLES 2021

1

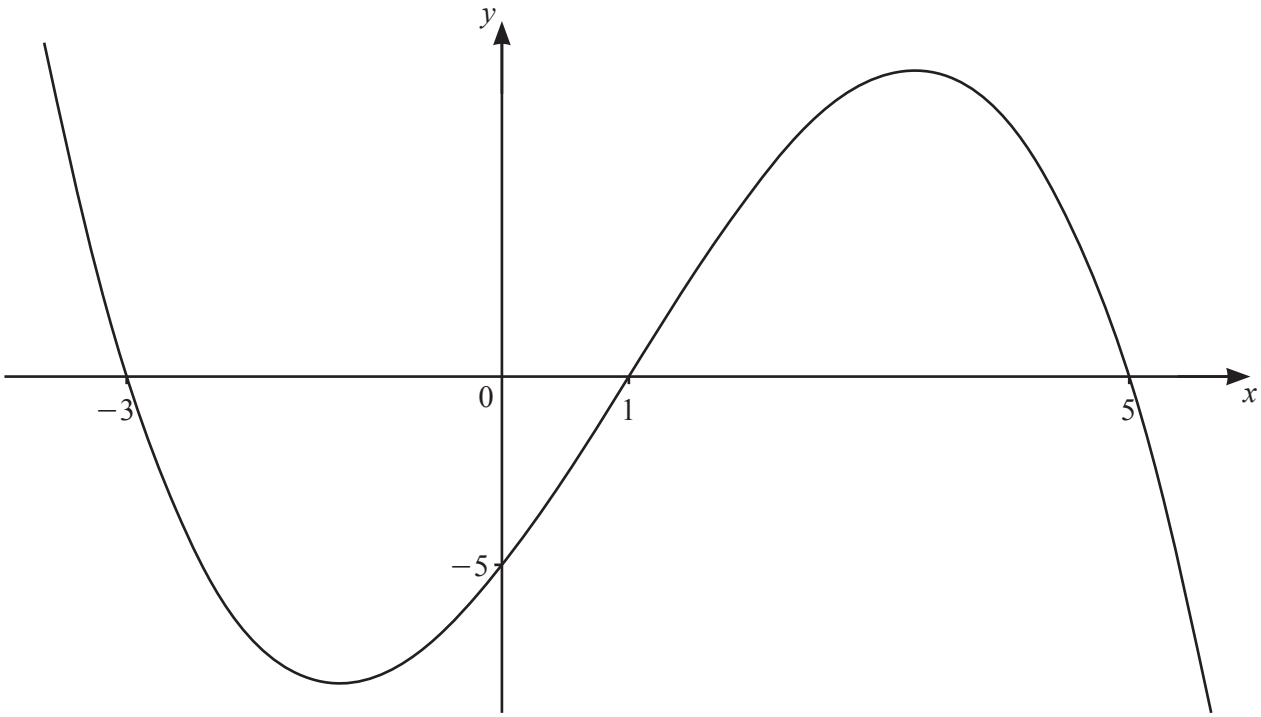

The diagram shows the graph of the cubic function $y = \mathrm{f}(x)$. The intercepts of the curve with the axes are all integers.

(a) Find the set of values of x for which $\mathrm{f}(x) < 0$. [1]

View solution

(b) Find an expression for $\mathrm{f}(x)$. [3]

View solution

2 **(a)** Given that $\dfrac{\sqrt[3]{xy}(zy)^2}{(xz)^{-3}\sqrt{z}} = x^a y^b z^c$, find the exact values of the constants a, b and c. [3]

View solution

(b) Solve the equation $5(2^{2p+1}) - 17(2^p) + 3 = 0$. [4]

View solution

3 **(a)** Write $3+2\lg a-4\lg b$ as a single logarithm to base 10. [4]

View solution

(b) Solve the equation $3\log_a 4+2\log_4 a=7$. [5]

View solution

4 Solve the equation $\cot\left(2x+\frac{\pi}{3}\right)-\sqrt{3}=0$, where $-\pi < x < \pi$ radians. Give your answers in terms of π. [4]

View solution

5 Find the possible values of the constant c for which the line $y = c$ is a tangent to the curve $y = 5\sin\frac{x}{3}+4$. [3]

View solution

© UCLES 2021

6 DO NOT USE A CALCULATOR IN THIS QUESTION.

The polynomial $\mathrm{p}(x) = 10x^3 + ax^2 - 10x + b$, where a and b are integers, is divisible by $2x + 1$. When $\mathrm{p}(x)$ is divided by $x + 1$, the remainder is -24.

(a) Find the value of a and of b. [4]

View solution

(b) Find an expression for $\mathrm{p}(x)$ as the product of three linear factors. [4]

View solution

(c) Write down the remainder when $\mathrm{p}(x)$ is divided by x. [1]

View solution

© UCLES 2021

7 (a)

View solution

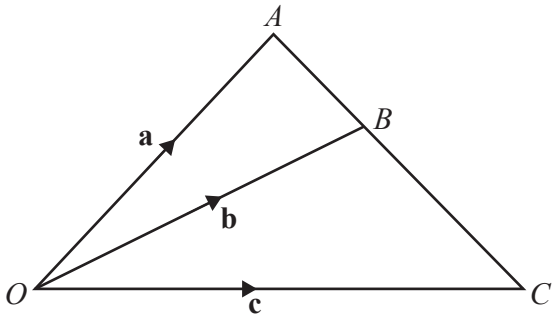

The diagram shows triangle OAC, where $\overrightarrow{OA} = \mathbf{a}$, $\overrightarrow{OB} = \mathbf{b}$ and $\overrightarrow{OC} = \mathbf{c}$. The point B lies on the line AC such that $AB:BC = m:n$, where m and n are constants.

(i) Write down $\overrightarrow{AB}$ in terms of **a** and **b**. [1]

(ii) Write down $\overrightarrow{BC}$ in terms of **b** and **c**. [1]

(iii) Hence show that $n\mathbf{a} + m\mathbf{c} = (m+n)\mathbf{b}$. [2]

(b) Given that $\lambda\begin{pmatrix}2\\1\end{pmatrix} + (\mu - 1)\begin{pmatrix}-4\\7\end{pmatrix} = (\lambda + 1)\begin{pmatrix}4\\-2\end{pmatrix}$, find the value of each of the constants λ and μ. [4]

View solution

8 **(a)** A 5-digit number is made using the digits 0, 1, 4, 5, 6, 7 and 9. No digit may be used more than once in any 5-digit number. Find how many such 5-digit numbers are even and greater than 50 000. [3]

View solution

(b) The number of combinations of n objects taken 4 at a time is equal to 6 times the number of combinations of n objects taken 2 at a time. Calculate the value of n. [5]

View solution

9

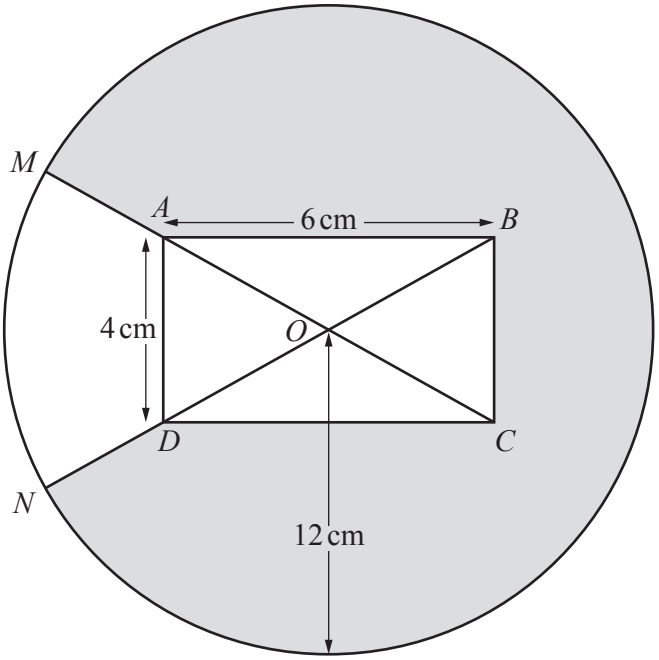

The diagram shows a circle, centre O, radius 12 cm, and a rectangle $ABCD$. The diagonals AC and BD intersect at O. The sides AB and AD of the rectangle have lengths 6 cm and 4 cm respectively. The points M and N lie on the circumference of the circle such that MAC and NDB are straight lines.

(a) Show that angle AOD is 1.176 radians correct to 3 decimal places. [2]

View solution

(b) Find the perimeter of the shaded region. [4]

View solution

(c) Find the area of the shaded region. [3]

View solution

10

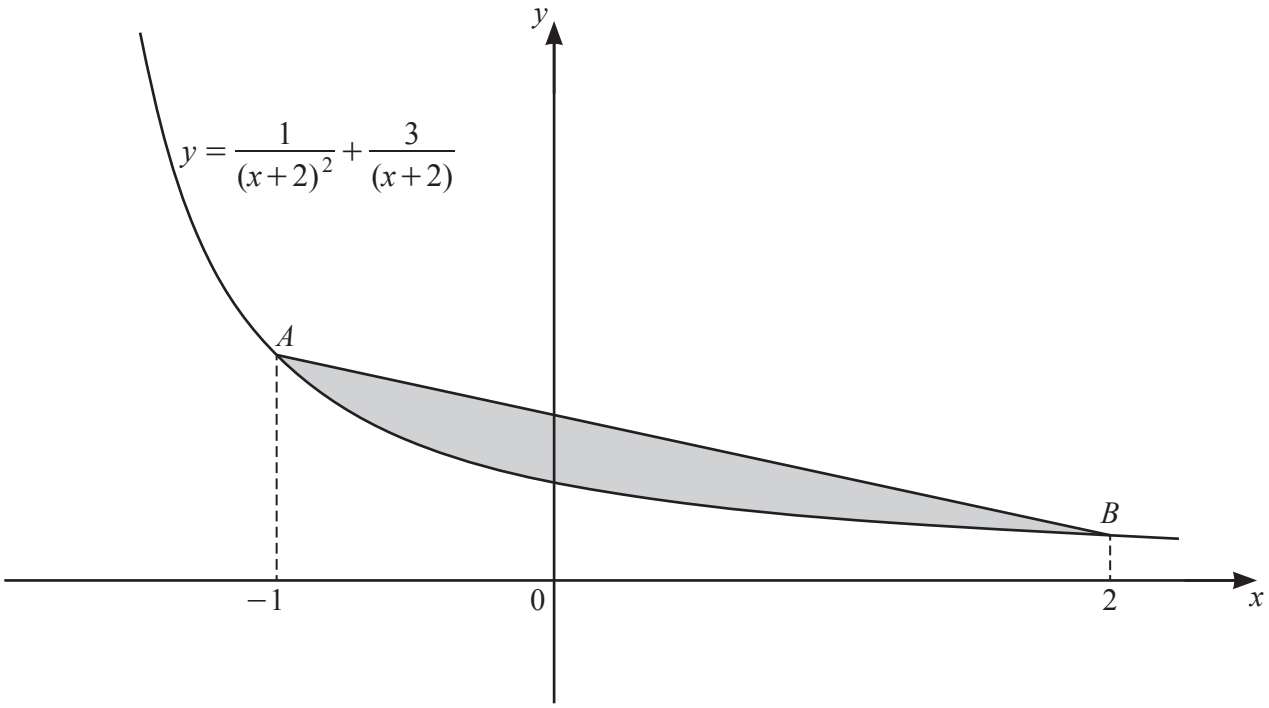

The diagram shows the graph of the curve $y = \frac{1}{(x+2)^2} + \frac{3}{(x+2)}$ for $x > -2$. The points A and B lie on the curve such that the x-coordinates of A and of B are -1 and 2 respectively.

(a) Find the exact y-coordinates of A and of B. [2]

View solution

(b) Find the area of the shaded region enclosed by the line AB and the curve, giving your answer in the form $\frac{p}{q} - \ln r$, where p, q and r are integers. [6]

View solution

© UCLES 2021

Additional working space for Question 10(b).

11 (a)

View solution

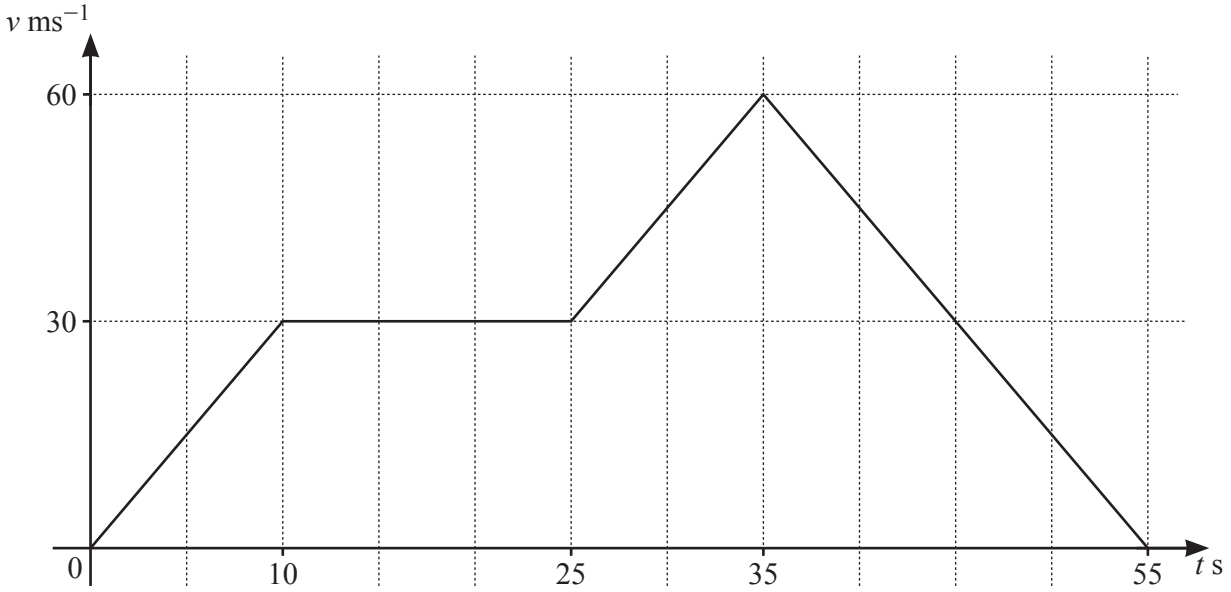

The diagram shows the velocity–time graph for a particle P, travelling in a straight line with velocity $v\,\text{ms}^{-1}$ at a time t seconds. P accelerates at a constant rate for the first 10 s of its motion, and then travels at constant velocity, $30\,\text{ms}^{-1}$, for another 15 s. P then accelerates at a constant rate for a further 10 s and reaches a velocity of $60\,\text{ms}^{-1}$. P then decelerates at a constant rate and comes to rest when $t = 55$.

(i) Find the acceleration when $t = 12$. [1]

(ii) Find the acceleration when $t = 50$. [1]

View solution

(iii) Find the total distance travelled by the particle P. [2]

View solution

(b) A particle Q travels in a straight line such that its velocity, $v\,\text{ms}^{-1}$, at time t s after passing through a fixed point O is given by $v = 4\cos 3t - 4$.

(i) Find the speed of Q when $t = \frac{5\pi}{9}$. [2]

View solution

(ii) Find the smallest positive value of t for which the acceleration of Q is zero. [3]

View solution

(iii) Find an expression for the displacement of Q from O at time t. [2]

View solution

© UCLES 2021

BLANK PAGE

Permission to reproduce items where third-party owned material protected by copyright is included has been sought and cleared where possible. Every reasonable effort has been made by the publisher (UCLES) to trace copyright holders, but if any items requiring clearance have unwittingly been included, the publisher will be pleased to make amends at the earliest possible opportunity.

To avoid the issue of disclosure of answer-related information to candidates, all copyright acknowledgements are reproduced online in the Cambridge Assessment International Education Copyright Acknowledgements Booklet. This is produced for each series of examinations and is freely available to download at www.cambridgeinternational.org after the live examination series.

Cambridge Assessment International Education is part of the Cambridge Assessment Group. Cambridge Assessment is the brand name of the University of Cambridge Local Examinations Syndicate (UCLES), which itself is a department of the University of Cambridge.