Cambridge Assessment International Education

Cambridge IGCSE™

CANDIDATE NAME									
CENTRE NUMBER						CANDIDATE NUMBER				

BIOLOGY **0610/51**

Paper 5 Practical Test **May/June 2025**

1 hour 15 minutes

You must answer on the question paper.

You will need: The materials and apparatus listed in the confidential instructions

INSTRUCTIONS

- Answer **all** questions.
- Use a black or dark blue pen. You may use an HB pencil for any diagrams or graphs.
- Write your name, centre number and candidate number in the boxes at the top of the page.
- Write your answer to each question in the space provided.
- Do **not** use an erasable pen or correction fluid.
- Do **not** write on any bar codes.
- You may use a calculator.
- You should show all your working and use appropriate units.

INFORMATION

- The total mark for this paper is 40.
- The number of marks for each question or part question is shown in brackets [ ].

For Examiner's Use	
1	
2	
Total	

This document has **12** pages. Any blank pages are indicated.

© UCLES 2025

1 You are going to investigate the effect of concentration on diffusion.

You will use cubes of agar which contain universal indicator. You will place the cubes of agar into different concentrations of hydrochloric acid solution and measure the time taken for the acid to diffuse to the centre of each cube.

Read all the instructions but DO NOT DO THEM until you have drawn a table for your results in the space provided in 1(a)(i).

You should use the safety equipment provided while you are doing the practical work.

Step 1 Label four large test-tubes **0.4**, **0.6**, **0.8**, **1.0**. Put the test-tubes in the test-tube rack.

Table 1.1 shows the volumes of 1.0 mol per dm^3 hydrochloric acid solution and distilled water needed to make the different concentrations of hydrochloric acid solution.

Table 1.1

concentration of hydrochloric acid solution / mol per dm^3	volume of 1.0 mol per dm^3 hydrochloric acid solution / cm^3	volume of distilled water / cm^3
0.4	4	6
0.6	6	4
0.8	8	2
1.0	10	0

Step 2 Use a 10 cm^3 syringe to put the volumes of 1.0 mol per dm^3 hydrochloric acid solution shown in Table 1.1 into the large test-tubes labelled **0.4**, **0.6**, **0.8**, **1.0**.

Step 3 Use a clean 10 cm^3 syringe to put the volumes of distilled water shown in Table 1.1 into the large test-tubes labelled **0.4**, **0.6**, **0.8**, **1.0**.

Step 4 You are provided with a block of agar which measures approximately 1 cm × 2 cm × 2 cm. The dotted lines in Fig. 1.1 show where the block should be cut. Use the knife to cut four cubes from the large block of agar. Each cube should be approximately 1 cm × 1 cm × 1 cm.

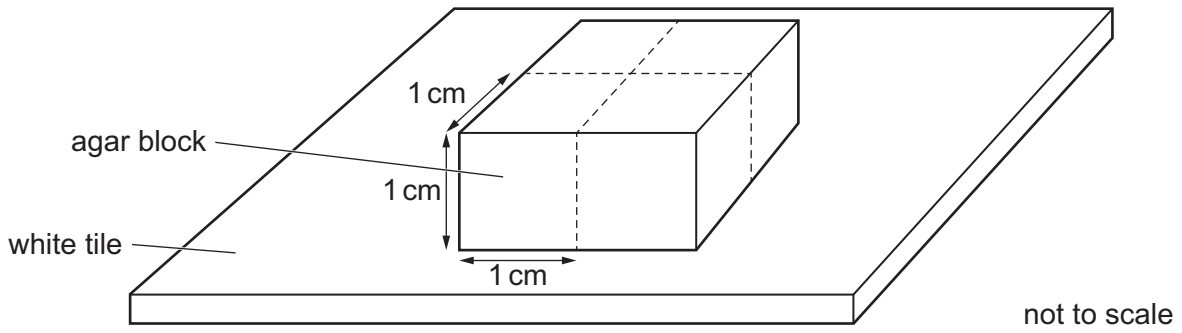

Fig. 1.1

Step 5 Raise your hand when you are ready for warm water to be added to the beaker labelled **water-bath**.

© UCLES 2025

Step 6 Place all the large test-tubes into the water-bath.

Step 7 Put **one** agar cube into each of the large test-tubes and immediately start the stop-clock. Observe the colour of the agar cubes.

You may find it easier to observe the colour if you hold the white card behind the test-tubes.

Record in your table in **1(a)(i)** the time taken, in **seconds**, for each agar cube to become completely red.

If an agar cube is not completely red after 10 minutes, stop timing and record > 600 for that concentration of hydrochloric acid solution in your table in **1(a)(i)**.

(a) (i) Prepare a table and record your results.

View solution

[4]

(ii) State a conclusion for your results.

.....

.....

..... [1]

(iii) State the independent and dependent variables in this investigation.

independent variable .....

.....

dependent variable .....

.....
[2]

(iv) State **two** sources of error in the method, **other than** not repeating the investigation.

1 .....

.....

.....

2 .....

.....

.....
[2]

(v) Identify **two** hazards in this investigation.

.....

.....

..... [1]

© UCLES 2025

(b) Plan an investigation to determine the effect of temperature on osmosis in potato plant tissue.

.....

.....

.....

.....

.....

.....

.....

.....

.....

.....

.....

..... [6]

[Total: 16]

View solution

2 **(a)** A student used DCPIP solution to compare the concentration of vitamin C in five solutions.

View solution

The student used this method:

- Put 1 cm^3 of 1% DCPIP solution into a test-tube.
- Use a syringe to add drops of 125 mg per dm^3 vitamin C solution to the test-tube.
- Keep adding drops of vitamin C solution until the DCPIP solution becomes colourless.
- Record the total volume of the 125 mg per dm^3 vitamin C solution added.

This method was repeated with four other concentrations of vitamin C solution.

(i) State the expected colour of the DCPIP solution **before** the vitamin C solution was added.

..... [1]

(ii) State **two** variables that were kept constant by the student in this investigation.

View solution

1 .....

2 .....

[2]

The results of the investigation are shown in Table 2.1.

Table 2.1

concentration of vitamin C / mg per dm^3	total volume of vitamin C solution added / cm^3
125	1.6
250	1.4
500	1.1
750	0.8
1000	0.5

© UCLES 2025

(b) (i) Plot a line graph on the grid of the data in Table 2.1.

View solution

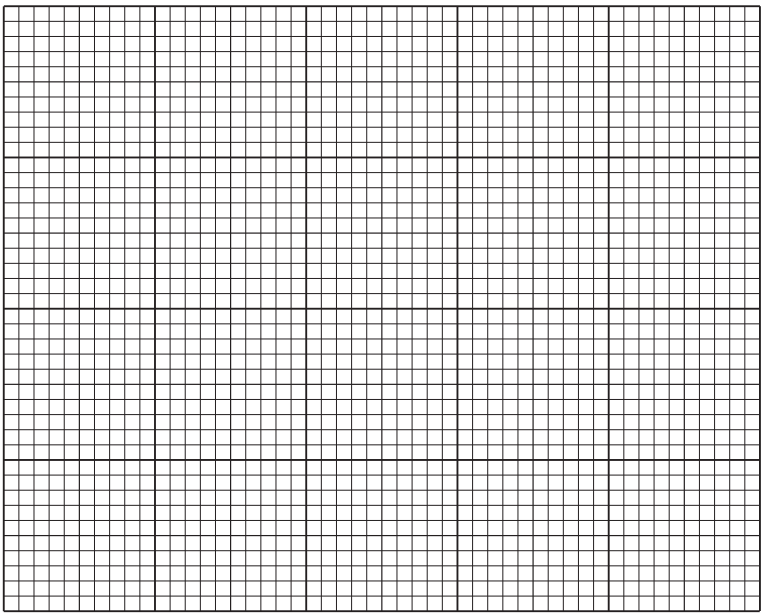

[4]

(ii) The student tested a sample of orange juice.

They found that 1.2 cm^3 of orange juice was needed to react with 1 cm^3 of 1% DCPIP solution.

View solution

Use your graph to estimate the vitamin C concentration of the orange juice.

Show on the graph how you obtained your estimate.

..... mg per dm^3

[2]

BLANK PAGE

(c) The student wanted to investigate the effect of storage on the vitamin C concentration in apple juice.

View solution

Three samples of fresh apple juice and three samples of stored apple juice were tested.

The results are shown in Table 2.2.

Table 2.2

sample	concentration of vitamin C in fresh apple juice / mg per dm^3	concentration of vitamin C in stored apple juice / mg per dm^3
1	281	170
2	276	96
3	272	104

(i) State a conclusion for the data shown in Table 2.2.

.....

.....

..... [1]

(ii) The student decided that the result of one sample shown in Table 2.2 was anomalous.

State what is meant by an anomalous result.

.....

.....

..... [1]

(iii) Draw a circle around the anomalous result in Table 2.2. [1]

(iv) Using the data for **sample 3** in Table 2.2, calculate the percentage change in the vitamin C concentration of the apple juice when it is stored.

Give your answer to **one** decimal place.

Space for working.

..... % [3]

© UCLES 2025

(d) Fig. 2.1 is a photograph of a fruit from a strawberry plant, *Fragaria ananassa*, that has been cut in half.

View solution

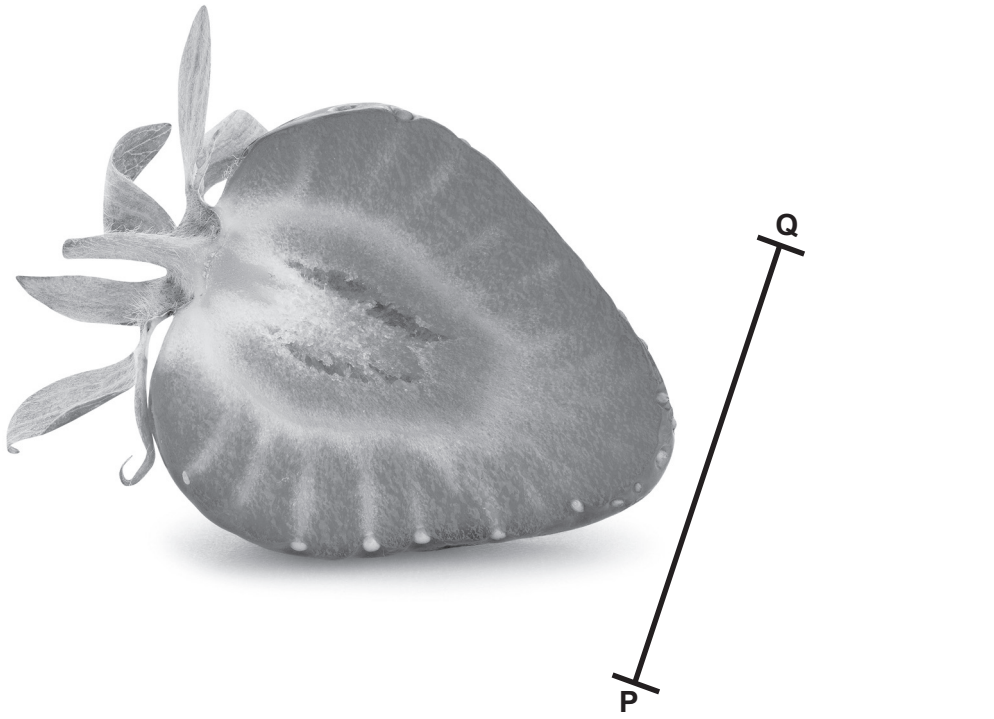

Fig. 2.1

(i) Draw a large diagram of the strawberry fruit shown in Fig. 2.1.

[4]

© UCLES 2025

(ii) Line **PQ** in Fig. 2.1 represents the maximum diameter of the strawberry fruit.

View solution

Measure the length of line **PQ** in Fig. 2.1.

length of **PQ** ..... mm

Calculate the actual diameter of the strawberry fruit using the formula and your measurement.

$$\text{magnification} = \frac{\text{length of line } \mathbf{PQ} \text{ in Fig. 2.1}}{\text{actual diameter of the strawberry fruit}}$$

Give your answer to **three** significant figures.

Space for working.

..... mm
[3]

(e) Describe a method the student could use to test a strawberry fruit for reducing sugars.

View solution

.....

.....

.....

.....

.....

.....

..... [2]

[Total: 24]

© UCLES 2025

BLANK PAGE

Permission to reproduce items where third-party owned material protected by copyright is included has been sought and cleared where possible. Every reasonable effort has been made by the publisher (UCLES) to trace copyright holders, but if any items requiring clearance have unwittingly been included, the publisher will be pleased to make amends at the earliest possible opportunity.

To avoid the issue of disclosure of answer-related information to candidates, all copyright acknowledgements are reproduced online in the Cambridge Assessment International Education Copyright Acknowledgements Booklet. This is produced for each series of examinations and is freely available to download at www.cambridgeinternational.org after the live examination series.

Cambridge Assessment International Education is part of Cambridge Assessment. Cambridge Assessment is the brand name of the University of Cambridge Local Examinations Syndicate (UCLES), which is a department of the University of Cambridge.

© UCLES 2025