Cambridge Assessment International Education

Cambridge IGCSE™

CANDIDATE NAME									
CENTRE NUMBER						CANDIDATE NUMBER				

BIOLOGY **0610/61**

Paper 6 Alternative to Practical **October/November 2025**

1 hour

You must answer on the question paper.

No additional materials are needed.

INSTRUCTIONS

- Answer **all** questions.
- Use a black or dark blue pen. You may use an HB pencil for any diagrams or graphs.
- Write your name, centre number and candidate number in the boxes at the top of the page.
- Write your answer to each question in the space provided.
- Do **not** use an erasable pen or correction fluid.
- Do **not** write on any bar codes.
- You may use a calculator.
- You should show all your working and use appropriate units.

INFORMATION

- The total mark for this paper is 40.
- The number of marks for each question or part question is shown in brackets [ ].

This document has **16** pages. Any blank pages are indicated.

© UCLES 2025

1 A student investigated the effect of temperature on the movement of water in celery stalks. The water contained a blue dye.

In plant stems such as a celery stalk, water moves in the xylem tissue within the vascular bundles.

The student used this method:

Step 1 Take two stalks of celery and cut them so that they are both 10 cm long.

Step 2 Prepare an ice-cold water-bath **C** and a warm water-bath **W**.

Place a beaker of blue dye into each water-bath, as shown in Fig. 1.1.

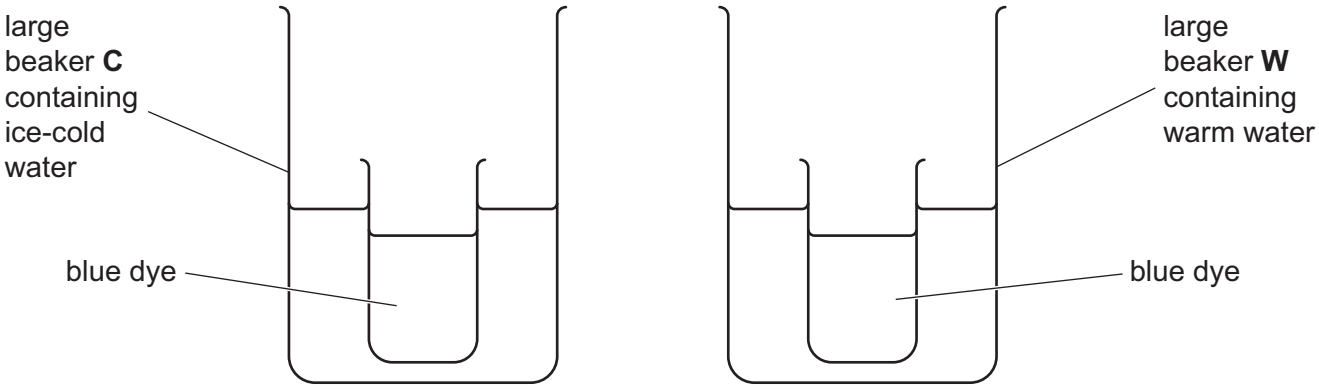

Fig. 1.1

Step 3 Measure the temperatures of the water in water-bath **C** and water-bath **W**.

Step 4 Let the blue dye equilibrate in the water-baths for three minutes.

Step 5 After three minutes, place one celery stalk into each beaker of blue dye, as shown in Fig. 1.2.

Keep the celery stalks in the blue dye for ten minutes.

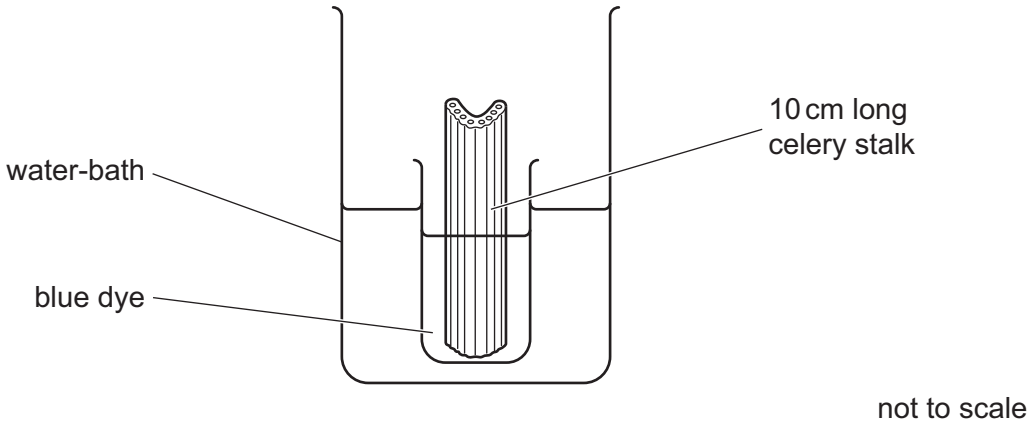

Fig. 1.2

Step 6 After ten minutes, measure the final temperatures of the water in water-bath **C** and water-bath **W**.

© UCLES 2025

(a) (i) Complete Table 1.1 by calculating the change in the water temperature for each water-bath.

View solution

Table 1.1

water-bath	water temperature in step 3 / °C	water temperature in step 6 / °C	change in water temperature / °C
C	4	15	.....
W	40	28	.....

[1]

Step 7 Remove the celery stalk from the blue dye in water-bath **C** and put it on a white tile.

Step 8 Cut a section across the celery stalk 5 mm from the end that was in the blue dye, as shown in Fig. 1.3.

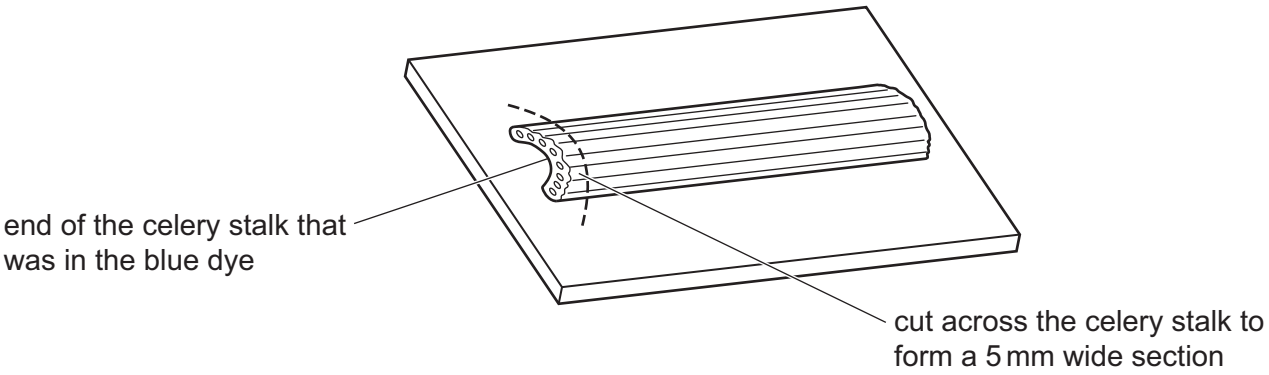

not to scale

Fig. 1.3

Step 9 Examine the xylem tissue of the cut section of celery stalk to see if the blue dye is visible.

Fig. 1.4 shows the position of the xylem tissue in a cut section of a celery stalk.

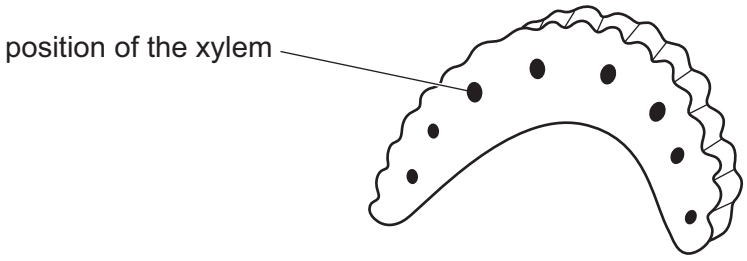

Fig. 1.4

Step 10 If the blue dye is still visible in the celery stalk, cut another 5 mm wide section from the dyed end of the remaining part of the celery stalk.

Continue cutting 5 mm wide sections from the celery stalk until the blue dye is no longer visible in the cut section.

Step 11 Count the number of sections you have cut from the celery stalk that contain the blue dye.

Step 12 Repeat steps 7 to 11 with the celery stalk from water-bath **W**.

© UCLES 2025

The student's results are shown in Fig. 1.5.

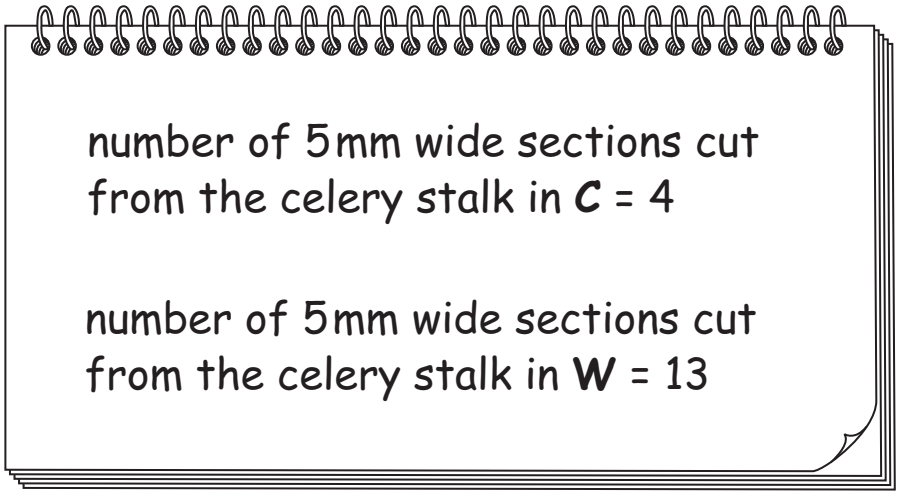

Fig. 1.5

View solution

(ii) Prepare a table and record the results shown in Fig. 1.5.

Include the number of sections cut and the total distance moved by the blue dye in each celery stalk.

[4]

(iii) Calculate the rate of movement of the blue dye in the celery stalk in beaker **W**.

Include the unit.

View solution

..... [2]

(iv) State a conclusion for this investigation.

View solution

.....

.....

..... [1]

(v) This investigation was only done once.

View solution

Explain why it is better to repeat an investigation.

.....

.....

..... [1]

(b) Identify **two** variables that were kept constant in this investigation.

View solution

1 .....

2 .....

[2]

(c) **(i)** The data you have recorded in Table 1.1 may indicate that there is a source of error with the method used in this investigation.

Identify the possible error, and describe an improvement to the method to reduce the effect of this error.

error .....

.....

improvement .....

.....

.....

[2]

View solution

(ii) In step 9, it is difficult to determine precisely the final position of the blue dye in the xylem.

Suggest an improvement to the method that would reduce this source of error.

View solution

.....

.....

..... [1]

(d) Xylem forms cylinder-like structures in a celery stalk.

View solution

Calculate the volume of a cylinder which is 100 mm long and has a diameter of 0.06 mm.

Use this formula: $v = \pi r^2 h$

Use a value for π of 3.14.

Give your answer to **two** decimal places.

Space for working.

..... mm^3 [2]

BLANK PAGE

(e) Celery plants can be damaged by insect pests feeding on them. This can reduce the growth of the celery plants.

A black aphid and the larvae of a leaf miner fly are both insect pests that damage celery plants.

Fig. 1.6 is a photograph of a black aphid.

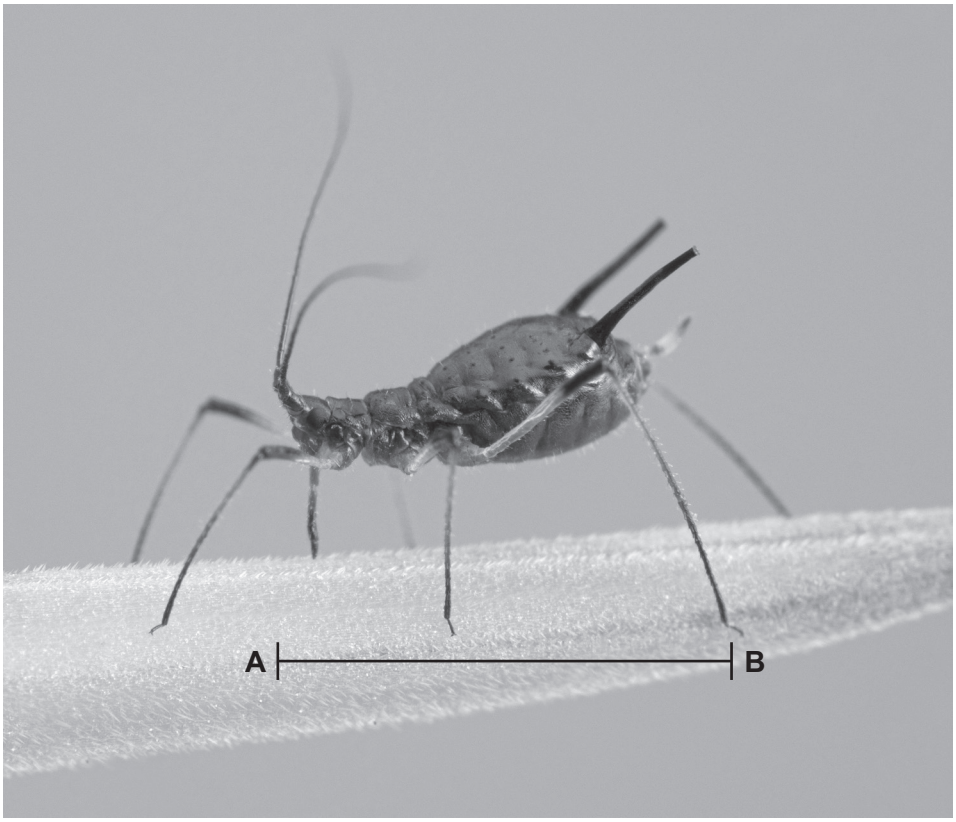

magnification ×35

Fig. 1.6

Fig. 1.7 is a photograph of a leaf miner fly.



magnification ×11

Fig. 1.7

(i) Line **AB** represents the body length of the black aphid.

View solution

Measure the length of line **AB** in Fig. 1.6.

length of line **AB** ..... mm

Calculate the actual body length of the black aphid using the formula and your measurement.

$$\text{magnification} = \frac{\text{length of line } \mathbf{AB} \text{ in Fig. 1.6}}{\text{actual body length of the black aphid}}$$

Give your answer to **one** significant figure.

Space for working.

..... mm
[3]

(ii) State **three** ways that the leaf miner fly shown in Fig. 1.7 differs from the black aphid shown in Fig. 1.6.

1 .....

.....

2 .....

.....

3 .....

.....
[3]

View solution

(f) Fig. 1.8 is a photograph of a celery leaf.

View solution



Fig. 1.8

Draw a large diagram of the celery leaf shown in Fig. 1.8.

[4]

[Total: 26]

© UCLES 2025

2 Amylase is an enzyme that catalyses the breakdown of starch to form reducing sugars.

View solution

Plan an investigation to determine the effect of pH on the activity of amylase.

Use iodine solution in your method.

.....

.....

.....

.....

.....

.....

.....

.....

.....

.....

.....

..... [6]

3 **(a)** Scientists investigated the relationship between height and the vital capacity of the lungs in people.

The vital capacity is the maximum volume of air that can be expelled from the lungs after taking the deepest possible breath.

Table 3.1 shows the results of the investigation.

Table 3.1

height of the person / cm	vital capacity / dm^3
130	1.9
140	2.2
150	2.9
160	3.4
170	4.1
180	5.1
190	6.2
200	7.2

© UCLES 2025

(i) Plot a line graph on the grid of the data in Table 3.1.

View solution

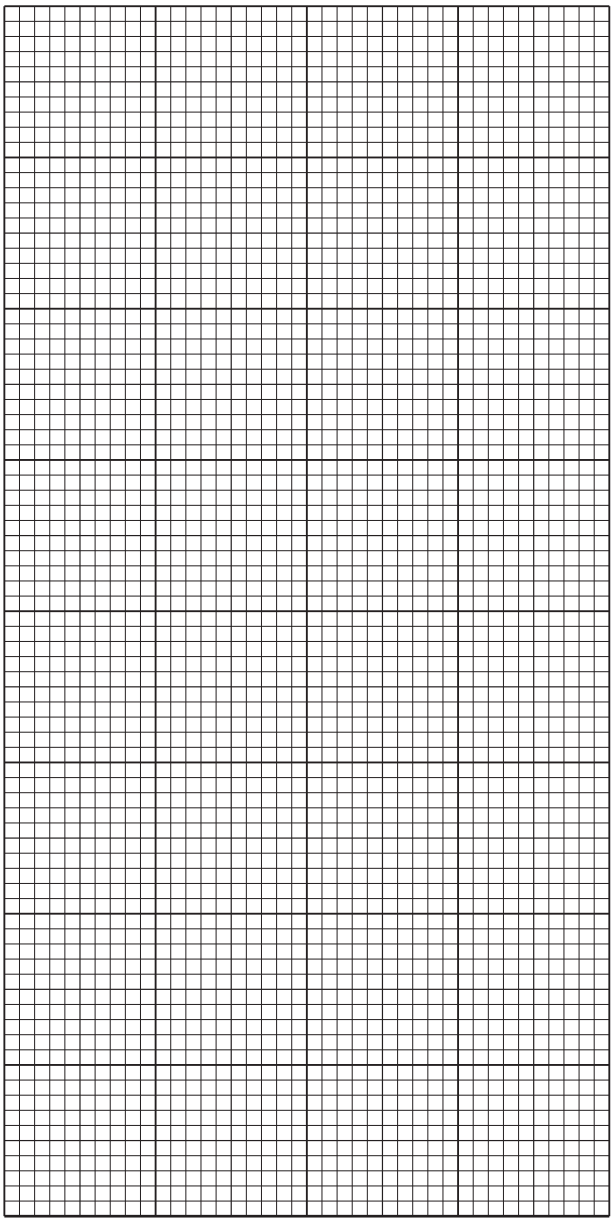

[4]

(ii) Describe the relationship shown in your graph between height and vital capacity.

View solution

.....

.....

..... [1]

(iii) Use your graph to estimate the vital capacity of a person with a height of 175 cm.

Indicate **on your graph** how you obtained your estimate.

View solution

..... dm^3

[2]

(b) In people with certain lung diseases, the enzyme elastase is more active. Elastase is a protein.

State the name of the reagent that is used to test for protein.

..... [1]

[Total: 8]

View solution

BLANK PAGE

BLANK PAGE

Permission to reproduce items where third-party owned material protected by copyright is included has been sought and cleared where possible. Every reasonable effort has been made by the publisher (UCLES) to trace copyright holders, but if any items requiring clearance have unwittingly been included, the publisher will be pleased to make amends at the earliest possible opportunity.

To avoid the issue of disclosure of answer-related information to candidates, all copyright acknowledgements are reproduced online in the Cambridge Assessment International Education Copyright Acknowledgements Booklet. This is produced for each series of examinations and is freely available to download at www.cambridgeinternational.org after the live examination series.

Cambridge Assessment International Education is part of Cambridge Assessment. Cambridge Assessment is the brand name of the University of Cambridge Local Examinations Syndicate (UCLES), which is a department of the University of Cambridge.

© UCLES 2025