Cambridge International Examinations
Cambridge International General Certificate of Secondary Education

CHEMISTRY **0620/11**

Paper 1 Multiple Choice (Core) **May/June 2016**

45 Minutes

Additional Materials: Multiple Choice Answer Sheet
Soft clean eraser
Soft pencil (type B or HB is recommended)

READ THESE INSTRUCTIONS FIRST

Write in soft pencil.
Do not use staples, paper clips, glue or correction fluid.
Write your name, Centre number and candidate number on the Answer Sheet in the spaces provided unless this has been done for you.
DO **NOT** WRITE IN ANY BARCODES.

There are **forty** questions on this paper. Answer **all** questions. For each question there are four possible answers **A**, **B**, **C** and **D**.
Choose the **one** you consider correct and record your choice in **soft pencil** on the separate Answer Sheet.

Read the instructions on the Answer Sheet very carefully.

Each correct answer will score one mark. A mark will not be deducted for a wrong answer.
Any rough working should be done in this booklet.
A copy of the Periodic Table is printed on page 16.
Electronic calculators may be used.

The syllabus is approved for use in England, Wales and Northern Ireland as a Cambridge International Level1/Level 2 Certificate.

© UCLES 2016

CAMBRIDGE International Examinations

1 In which changes do the particles move further apart?

View solution

$$\text{gas} \underset{\text{Y}}{\overset{\text{W}}{\rightleftharpoons}} \text{liquid} \underset{\text{Z}}{\overset{\text{X}}{\rightleftharpoons}} \text{solid}$$

A W and X **B** W and Z **C** X and Y **D** Y and Z

2 A sample of a dye is investigated by chromatography.

View solution

A line is drawn across a piece of chromatography paper and a spot of the dye is placed on it.

The paper is placed in water.

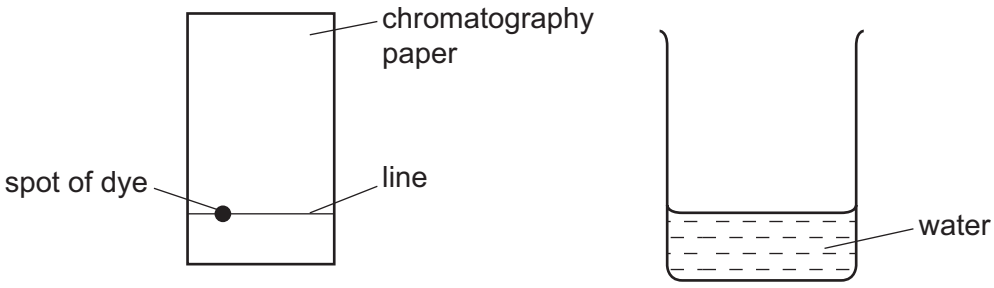

Which row is correct?

	what is used to draw the line	position of spot
A	ink	above the level of the water
B	ink	below the level of the water
C	pencil	above the level of the water
D	pencil	below the level of the water

3 One of the instructions for an experiment reads as follows.

View solution

Quickly add 50 cm^3 of acid.

What is the best piece of apparatus to use?

A a burette

B a conical flask

C a measuring cylinder

D a pipette

© UCLES 2016

4 Diamond and graphite are macromolecules.

View solution

Which statement about diamond and graphite is **not** correct?

A They are giant structures with high melting points.

B They are non-conductors of electricity.

C They contain only atoms of a non-metal.

D They have covalent bonds between the atoms.

5 The table shows the electronic structure of four atoms.

View solution

atom	electronic structure
W	2,8,1
X	2,8,4
Y	2,8,7
Z	2,8,8

Which two atoms combine to form a covalent compound?

A W and X **B** W and Y **C** X and Y **D** X and Z

6 An aluminium atom has a nucleon number of 27 and a proton number of 13.

View solution

How many neutrons does this aluminium atom contain?

A 13 **B** 14 **C** 27 **D** 40

7 What happens when a bond is formed between a green gaseous element and a soft metallic element?

View solution

A The gas atoms gain an electron.

B The gas atoms lose an electron.

C The metal atoms gain an electron.

D The two elements share a pair of electrons.

8 The equation shows the reaction between magnesium and sulfuric acid.
[A_r: H, 1; O, 16; Mg, 24; S, 32]

View solution

$$Mg + H_2SO_4 \rightarrow MgSO_4 + H_2$$

In this reaction, which mass of magnesium sulfate is formed when 6 g of magnesium react with excess sulfuric acid?

A 8 **B** 24 **C** 30 **D** 60

© UCLES 2016

9 The diagram shows an electrical cable.

View solution

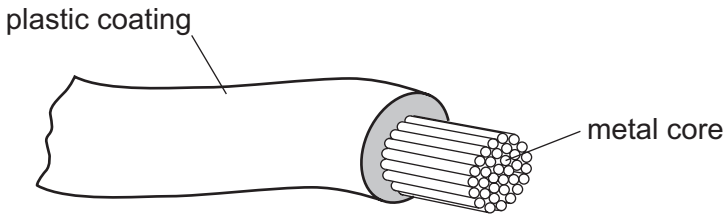

Which statement about the substances used is correct?

A The coating is plastic because it conducts electricity well.

B The core is copper because it conducts electricity well.

C The core is copper because it is cheap and strong.

D The core is iron because it is cheap and strong.

10 When substance X is electrolysed, the amount of gases P and Q formed is shown.

View solution

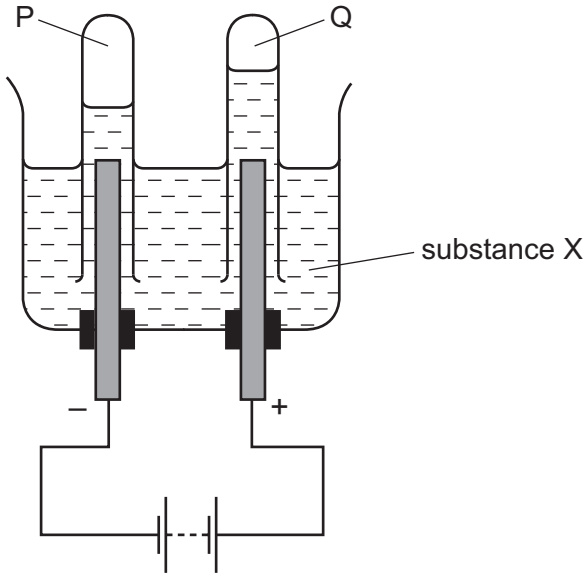

What is substance X?

A concentrated aqueous sodium chloride

B concentrated hydrochloric acid

C dilute sulfuric acid

D molten lead(II) bromide

© UCLES 2016

11 The energy level diagram for the reaction between sodium hydrogen carbonate and dilute hydrochloric acid is shown.

View solution

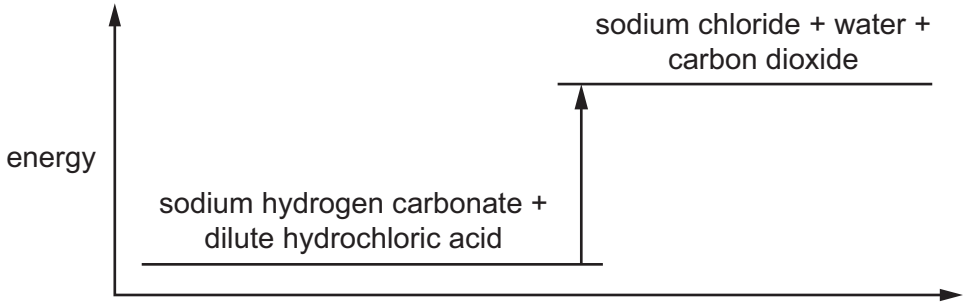

Which row correctly describes the type of reaction and the energy of the reactants and products?

	type of reaction	energy of the reactants and products
A	endothermic	the products have more energy than the reactants
B	endothermic	the reactants have more energy than the products
C	exothermic	the products have more energy than the reactants
D	exothermic	the reactants have more energy than the products

12 The diagram shows some properties that substances may have.

View solution

To which labelled part of the diagram does ^{235}U belong?

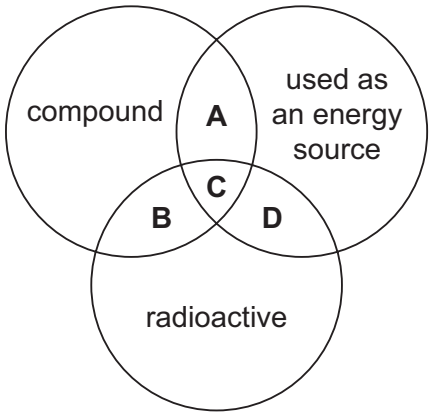

13 A liquid X reacts with solid Y to form a gas.

View solution

Which two diagrams show suitable methods for investigating the rate (speed) of the reaction?

1

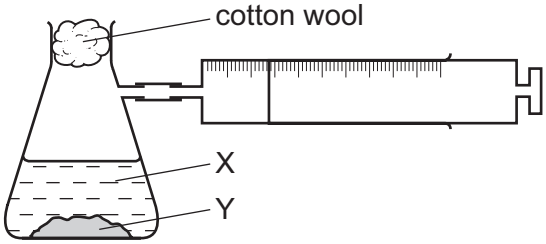

2

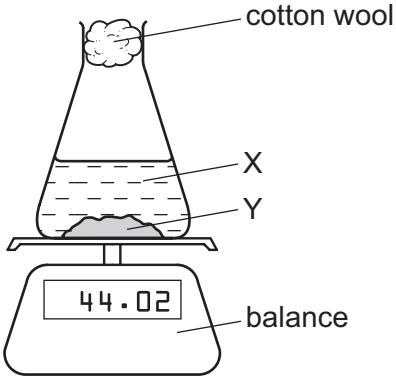

3

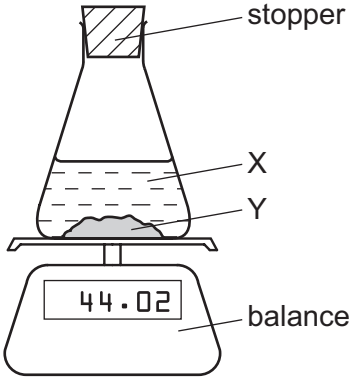

4

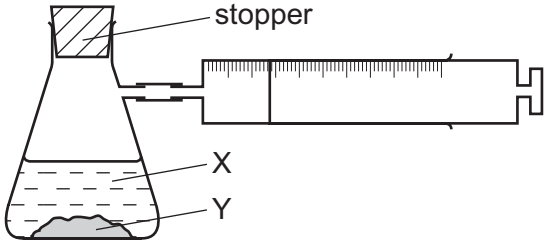

A 1 and 3 **B** 1 and 4 **C** 2 and 3 **D** 2 and 4

© UCLES 2016

14 An experiment, S, is carried out to measure the volume of hydrogen produced when excess dilute sulfuric acid is added to zinc.

A second experiment, T, is carried out using the same mass of zinc but under different conditions.

View solution

The results of the two experiments are shown.

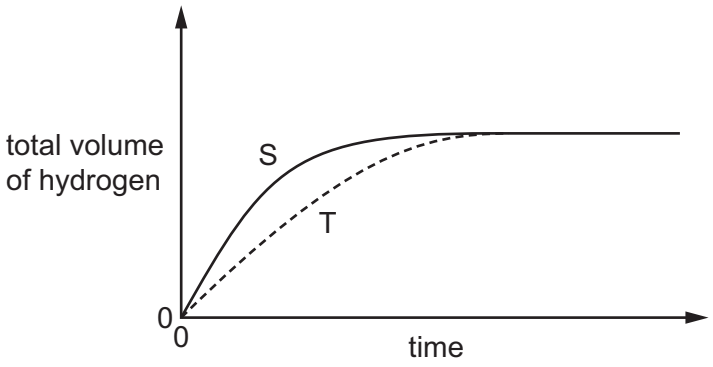

Which changes in the conditions between experiments S and T give curve T?

	addition of a catalyst	the zinc is in large pieces not powdered
A	✓	✓
B	✓	✗
C	✗	✓
D	✗	✗

View solution

15 Aluminium reacts with iron(III) oxide as shown.

$$\text{iron(III) oxide} + \text{aluminium} \rightarrow \text{iron} + \text{aluminium oxide}$$

Which statement about this reaction is correct?

A Aluminium is oxidised.

B Aluminium oxide is reduced.

C Iron(III) oxide is oxidised.

D Iron is oxidised.

View solution

16 Which reaction is reversible?

A $Cu + ZnSO_4 \rightarrow CuSO_4 + Zn$

B $CuO + H_2SO_4 \rightarrow CuSO_4 + H_2O$

C $CuO + H_2 \rightarrow Cu + H_2O$

D $CuSO_4.5H_2O \rightarrow CuSO_4 + 5H_2O$

© UCLES 2016

17 Which statements are properties of an acid?

View solution

1 reacts with ammonium sulfate to form ammonia

2 turns red litmus blue

	1	2
A	✓	✓
B	✓	✗
C	✗	✓
D	✗	✗

18 Part of the Periodic Table is shown.

View solution

Which element forms an acidic oxide?

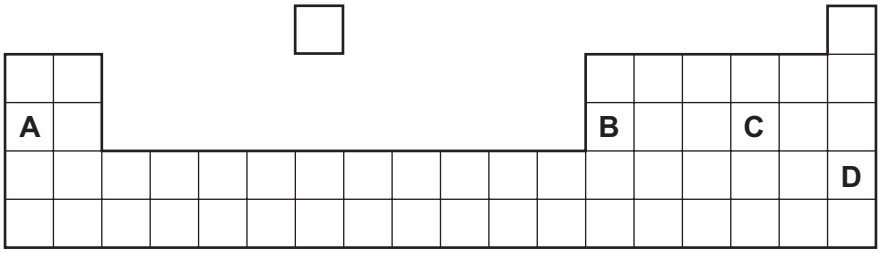

19 A method used to make copper(II) sulfate crystals is shown.

View solution

1 Place dilute sulfuric acid in a beaker.

2 Warm the acid.

3 Add copper(II) oxide until it is in excess.

4 Filter the mixture.

5 Evaporate the filtrate until crystals start to form.

6 Leave the filtrate to cool.

What are the purposes of step 3 and step 4?

	step 3	step 4
A	to ensure all of the acid has reacted	to obtain solid copper(II) sulfate
B	to ensure all of the acid has reacted	to remove excess copper(II) oxide
C	to speed up the reaction	to obtain solid copper(II) sulfate
D	to speed up the reaction	to remove excess copper(II) oxide

© UCLES 2016

20 The results of two tests on solid X are shown.

View solution

test	observation
aqueous sodium hydroxide added	green precipitate formed
acidified silver nitrate added	yellow precipitate formed

What is X?

A copper(II) chloride

B copper(II) iodide

C iron(II) chloride

D iron(II) iodide

21 Where in the Periodic Table is the metallic character of the elements greatest?

View solution

	left or right side of a period	at the top or bottom of a group
A	left	bottom
B	left	top
C	right	bottom
D	right	top

22 Some properties of four elements, P, Q, R and S, are shown in the table.

View solution

Two of these elements are in Group I of the Periodic Table and two are in Group VII.

element	reaction with water	physical state at room temperature
P	reacts vigorously	solid
Q	does not react with water	solid
R	reacts explosively	solid
S	dissolves giving a coloured solution	liquid

Which statement is correct?

A P is below R in Group I.

B Q is above R in Group I.

C Q is below S in Group VII.

D R is below S in Group VII.

© UCLES 2016

23 Which of the following could be a transition element?

View solution

	melting point in °C	density in g / cm^3	colour	electrical conductor
A	114	4.9	purple	no
B	659	2.7	grey	yes
C	1677	4.5	grey	yes
D	3727	2.3	black	yes

View solution

24 Two statements about argon are given.

1 Argon has a full outer shell of electrons.

2 Argon is very reactive and is used in lamps.

Which is correct?

A Both statements are correct and statement 2 explains statement 1.

B Both statements are correct but statement 2 does not explain statement 1.

C Statement 1 is correct but statement 2 is incorrect.

D Statement 2 is correct but statement 1 is incorrect.

25 Three students, X, Y and Z, were told that solid P reacts with dilute acids and also conducts electricity.

View solution

The table shows the students' suggestions about the identity of P.

X	Y	Z
copper	iron	graphite

Which of the students are correct?

A X, Y and Z **B** X only **C** Y only **D** Z only

© UCLES 2016

26 W, X and Y are metals, one of which is copper and one of which is iron.

View solution

- W has a coloured oxide which can be reduced by carbon.
- X has a black oxide and is also found in nature as a pure metal.
- Y has an oxide which cannot be reduced by carbon.

Which metal is the most reactive and what is the possible identity of W?

	most reactive metal	possible identity of W
A	X	Cu
B	X	Fe
C	Y	Cu
D	Y	Fe

View solution

27 Tin is a metal that is less reactive than iron and is extracted from its ore cassiterite, SnO_2.

Which statements about tin are correct?

1 Tin can be extracted from cassiterite using carbon.

2 Tin does not conduct electricity.

3 Tin is hard and shiny.

A 1, 2 and 3 **B** 1 and 2 only **C** 1 and 3 only **D** 2 and 3 only

View solution

28 Which statement about the uses of metals is correct?

A Aluminium is used in the manufacture of aircraft because of its strength and high density.

B Copper is used in electrical wiring because of its strength and high density.

C Mild steel is used in the manufacture of car bodies because of its strength and resistance to corrosion.

D Stainless steel is used in the construction of chemical plant because of its strength and resistance to corrosion.

© UCLES 2016

29 The diagram shows an experiment to investigate how paint affects the rusting of iron.

View solution

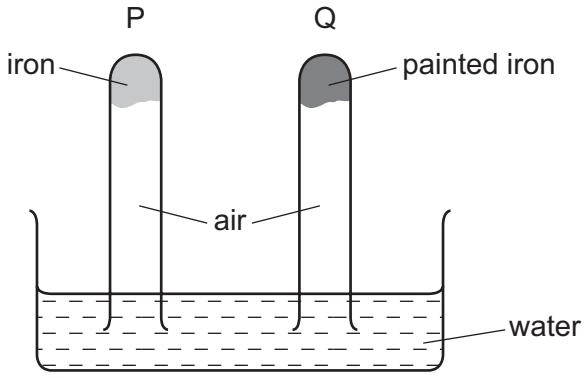

What happens to the water level in tubes P and Q?

	tube P	tube Q
A	falls	rises
B	no change	rises
C	rises	falls
D	rises	no change

30 A new planet has been discovered and its atmosphere has been analysed.

View solution

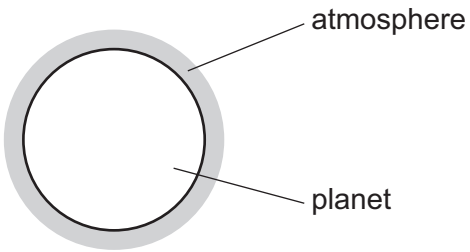

The table shows the composition of its atmosphere.

gas	percentage by volume
carbon dioxide	4
nitrogen	72
oxygen	24

Which gases are present in the atmosphere of the planet in a higher percentage than they are in the Earth's atmosphere?

A carbon dioxide and oxygen

B carbon dioxide only

C nitrogen and oxygen

D nitrogen only

© UCLES 2016

31 Water was added to separate samples of anhydrous cobalt(II) chloride and anhydrous copper(II) sulfate.

View solution

Which row describes the colour changes that take place in these reactions?

	cobalt(II) chloride	copper(II) sulfate
A	blue to pink	blue to white
B	blue to pink	white to blue
C	pink to blue	blue to white
D	pink to blue	white to blue

32 Which pollutant found in air does **not** have an effect on respiration?

View solution

A carbon monoxide

B lead compounds

C oxides of nitrogen

D sulfur dioxide

33 A farmer's soil is very low in both nitrogen (N) and phosphorus (P).

View solution

Which fertiliser would improve the quality of this soil most effectively?

	percentage		
	nitrogen (N)	phosphorus (P)	potassium (K)
A	11	11	27
B	12	37	10
C	28	10	10
D	31	29	9

34 When limestone is heated it forms lime (calcium oxide) and carbon dioxide.

View solution

$$CaCO_3(s) \rightarrow CaO(s) + CO_2(g)$$

Which statement is **not** correct?

A Carbon dioxide is a greenhouse gas which may contribute to climate change.

B Slaked lime is used to neutralise industrial waste.

C The lime can be used to treat alkaline soil.

D This reaction is an example of thermal decomposition.

© UCLES 2016

35 The diagram shows the separation of petroleum into fractions.

View solution

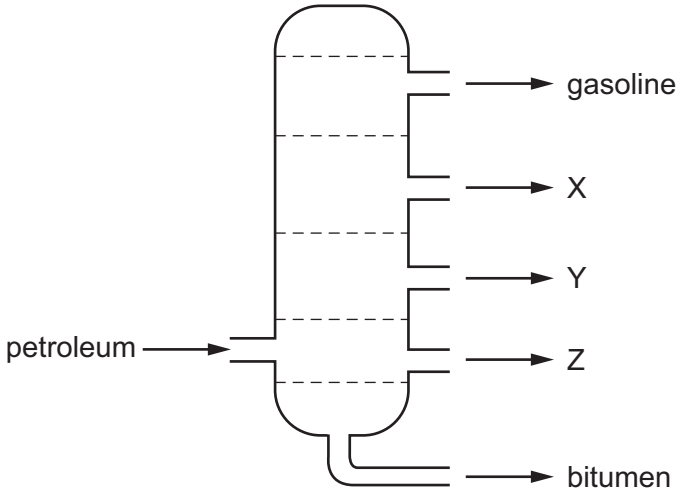

What could X, Y and Z represent?

	X	Y	Z
A	diesel oil	lubricating fraction	paraffin
B	lubricating fraction	diesel oil	paraffin
C	paraffin	lubricating fraction	diesel oil
D	paraffin	diesel oil	lubricating fraction

View solution

36 Which of the compounds shown are in the same homologous series?

1 CH_3OH

2 CH_3CH_2OH

3 CH_3COOH

4 $CH_3CH_2CH_2OH$

A 1, 2 and 3 **B** 1, 2 and 4 **C** 1, 3 and 4 **D** 2, 3 and 4

View solution

37 Compound Q decolourises bromine water.

Compound Q has two carbon atoms in each molecule.

Which statement about compound Q is correct?

A It contains carbon-hydrogen double bonds.

B It has six hydrogen atoms per molecule.

C It has two carbon-carbon double bonds.

D It is produced by cracking alkanes.

© UCLES 2016

38 What is used in the production of ethanol from ethene?

View solution

A hydrogen and oxygen

B oxygen only

C steam

D yeast

39 Ethene forms an addition polymer as shown.

View solution



Which terms describe this polymer?

A a saturated compound called poly(ethane)

B a saturated compound called poly(ethene)

C an unsaturated compound called poly(ethane)

D an unsaturated compound called poly(ethene)

40 The diagram shows a molecule of an organic compound W.

View solution

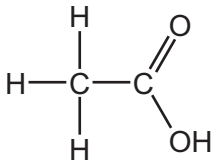

Which statement is **not** correct?

A A solution of W in water has a pH greater than pH 7.

B A solution of W in water reacts with sodium hydroxide solution.

C When copper(II) carbonate is added to a solution of W in water, a gas is produced.

D When magnesium is added to a solution of W in water, a gas is produced.

Permission to reproduce items where third-party owned material protected by copyright is included has been sought and cleared where possible. Every reasonable effort has been made by the publisher (UCLES) to trace copyright holders, but if any items requiring clearance have unwittingly been included, the publisher will be pleased to make amends at the earliest possible opportunity.

To avoid the issue of disclosure of answer-related information to candidates, all copyright acknowledgements are reproduced online in the Cambridge International Examinations Copyright Acknowledgements Booklet. This is produced for each series of examinations and is freely available to download at www.cie.org.uk after the live examination series.

Cambridge International Examinations is part of the Cambridge Assessment Group. Cambridge Assessment is the brand name of University of Cambridge Local Examinations Syndicate (UCLES), which is itself a department of the University of Cambridge.

© UCLES 2016

© UCLES 2016

The Periodic Table of Elements

Group																	
I	II											III	IV	V	VI	VII	VIII
							1 H hydrogen 1										2 He helium 4
3 Li lithium 7	4 Be beryllium 9											5 B boron 11	6 C carbon 12	7 N nitrogen 14	8 O oxygen 16	9 F fluorine 19	10 Ne neon 20
11 Na sodium 23	12 Mg magnesium 24											13 Al aluminium 27	14 Si silicon 28	15 P phosphorus 31	16 S sulfur 32	17 Cl chlorine 35.5	18 Ar argon 40
19 K potassium 39	20 Ca calcium 40	21 Sc scandium 45	22 Ti titanium 48	23 V vanadium 51	24 Cr chromium 52	25 Mn manganese 55	26 Fe iron 56	27 Co cobalt 59	28 Ni nickel 59	29 Cu copper 64	30 Zn zinc 65	31 Ga gallium 70	32 Ge germanium 73	33 As arsenic 75	34 Se selenium 79	35 Br bromine 80	36 Kr krypton 84
37 Rb rubidium 85	38 Sr strontium 88	39 Y yttrium 89	40 Zr zirconium 91	41 Nb niobium 93	42 Mo molybdenum 96	43 Tc technetium –	44 Ru ruthenium 101	45 Rh rhodium 103	46 Pd palladium 106	47 Ag silver 108	48 Cd cadmium 112	49 In indium 115	50 Sn tin 119	51 Sb antimony 122	52 Te tellurium 128	53 I iodine 127	54 Xe xenon 131
55 Cs caesium 133	56 Ba barium 137	57–71 lanthanoids	72 Hf hafnium 178	73 Ta tantalum 181	74 W tungsten 184	75 Re rhenium 186	76 Os osmium 190	77 Ir iridium 192	78 Pt platinum 195	79 Au gold 197	80 Hg mercury 201	81 Tl thallium 204	82 Pb lead 207	83 Bi bismuth 209	84 Po polonium –	85 At astatine –	86 Rn radon –
87 Fr francium –	88 Ra radium –	89–103 actinoids	104 Rf rutherfordium –	105 Db dubnium –	106 Sg seaborgium –	107 Bh bohrium –	108 Hs hassium –	109 Mt meitnerium –	110 Ds darmstadtium –	111 Rg roentgenium –	112 Cn copernicium –		114 Fl flerovium –		116 Lv livermorium –		

Key

atomic number
atomic symbol
name
relative atomic mass

lanthanoids	57 La lanthanum 139	58 Ce cerium 140	59 Pr praseodymium 141	60 Nd neodymium 144	61 Pm promethium –	62 Sm samarium 150	63 Eu europium 152	64 Gd gadolinium 157	65 Tb terbium 159	66 Dy dysprosium 163	67 Ho holmium 165	68 Er erbium 167	69 Tm thulium 169	70 Yb ytterbium 173	71 Lu lutetium 175
actinoids	89 Ac actinium –	90 Th thorium 232	91 Pa protactinium 231	92 U uranium 238	93 Np neptunium –	94 Pu plutonium –	95 Am americium –	96 Cm curium –	97 Bk berkelium –	98 Cf californium –	99 Es einsteinium –	100 Fm fermium –	101 Md mendelevium –	102 No nobelium –	103 Lr lawrencium –

The volume of one mole of any gas is 24 dm^3 at room temperature and pressure (r.t.p.)