Cambridge IGCSE

Cambridge International Examinations
Cambridge International General Certificate of Secondary Education

CANDIDATE NAME									
CENTRE NUMBER						CANDIDATE NUMBER				

CHEMISTRY **0620/41**

Paper 4 Theory (Extended) **May/June 2016**

1 hour 15 minutes

Candidates answer on the Question Paper.

No Additional Materials are required.

READ THESE INSTRUCTIONS FIRST

Write your Centre number, candidate number and name on all the work you hand in.
Write in dark blue or black pen.
You may use an HB pencil for any diagrams or graphs.
Do not use staples, paper clips, glue or correction fluid.
DO **NOT** WRITE IN ANY BARCODES.

Answer **all** questions.
Electronic calculators may be used.
A copy of the Periodic Table is printed on page 16.
You may lose marks if you do not show your working or if you do not use appropriate units.

At the end of the examination, fasten all your work securely together.
The number of marks is given in brackets [ ] at the end of each question or part question.

The syllabus is approved for use in England, Wales and Northern Ireland as a Cambridge International Level 1/Level 2 Certificate.

© UCLES 2016

CAMBRIDGE International Examinations

1 Protons, neutrons and electrons are subatomic particles.

(a) Complete the table to show the relative mass and relative charge of a proton, a neutron and an electron.

View solution

particle	relative mass	relative charge
proton		
neutron		
electron	$\frac{1}{1840}$	

[3]

(b) Bromine has two isotopes.

View solution

(i) Define the term *isotope*.

.....

..... [2]

(ii) Explain why the two isotopes of bromine have the same chemical properties.

View solution

.....

..... [2]

(c) The table shows the number of protons, neutrons and electrons in some atoms and ions.

View solution

Complete the table.

particle	number of protons	number of neutrons	number of electrons
$^{7}_{3}Li$			
$^{34}_{16}S^{2-}$			
	19	22	18

[5]

[Total: 12]

© UCLES 2016

2 Period 3 contains the elements sodium to argon. This question asks about the chemistry of each of the Period 3 elements or their compounds.

(a) Sodium nitrate is a white crystalline solid. When heated it melts and the following reaction occurs.

View solution

$$2NaNO_3(l) \rightarrow 2NaNO_2(l) + O_2(g)$$

A 3.40 g sample of sodium nitrate is heated.

Calculate the

- number of moles of $NaNO_3$ used,

..... mol

- number of moles of O_2 formed,

..... mol

- volume of O_2 formed, in dm^3 (measured at r.t.p.).

..... dm^3

[3]

(b) Magnesium reacts slowly with warm water to form a base, magnesium hydroxide.

View solution

(i) Explain what is meant by the term *base*.

..... [1]

(ii) Write a chemical equation for the reaction between magnesium and warm water.

..... [2]

View solution

(c) Aluminium oxide is amphoteric. It is insoluble in water.

View solution

Describe experiments to show that aluminium oxide is amphoteric.

.....

.....

.....

..... [3]

View solution

(d) Silicon(IV) oxide has a giant structure.

(i) Name the type of bonding in silicon(IV) oxide.

..... [1]

View solution

(ii) Give two **physical** properties of silicon(IV) oxide.

.....

..... [2]

(e) Calcium phosphate is used in fertilisers. The bonding in calcium phosphate is ionic. Calcium phosphate contains the phosphate ion, PO_4^{3-}.

View solution

(i) What is ionic bonding?

.....

..... [2]

(ii) Deduce the formula of calcium phosphate.

..... [1]

View solution

© UCLES 2016

(f) Sulfur tetrafluoride, SF_4, can be made by combining gaseous sulfur with fluorine.

View solution

$$S(g) + 2F_2(g) \rightarrow SF_4(g)$$

The reaction is exothermic.

(i) Complete the energy level diagram for this reaction. Include an arrow which clearly shows the energy change during the reaction.

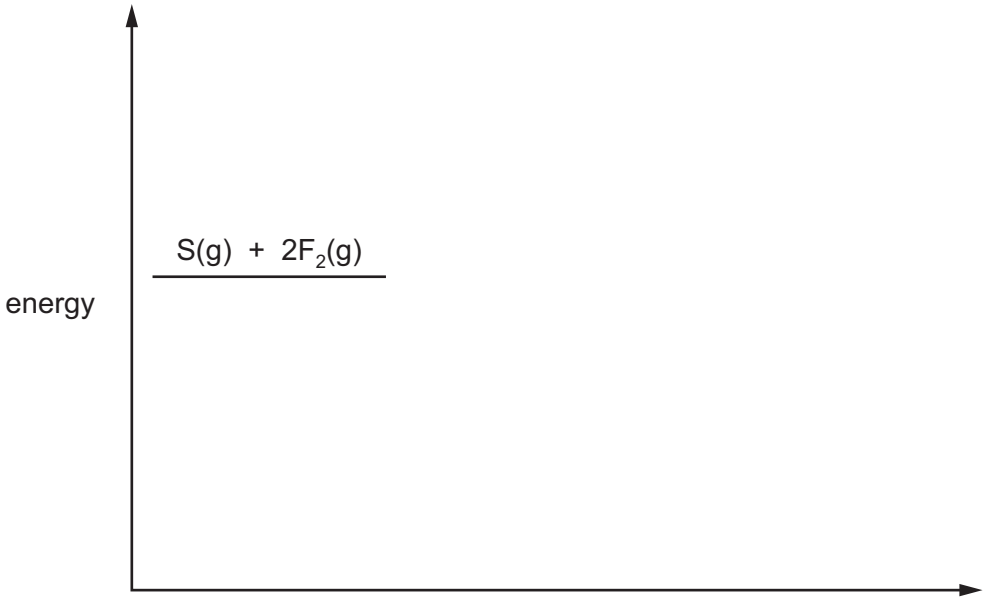

[3]

(ii) During the reaction the amount of energy given out is 780 kJ / mol.

View solution

The F–F bond energy is 160 kJ / mol.

Use this information to determine the bond energy, in kJ / mol, of one S–F bond in SF_4.

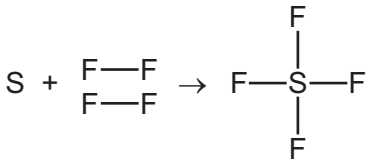

..... kJ / mol [3]

(g) Chlorine and compounds of chlorine are important in water treatment and in laboratory testing for water.

View solution

(i) Chlorine is added to water to make the water safe to drink.

Explain why adding chlorine makes water safe to drink.

..... [1]

(ii) A compound of chlorine is used in the laboratory to test for the presence of water.

Name the compound of chlorine used in this test and describe the colour change seen in a positive result of this test.

name of compound .....

colour change from ..... to .....

[3]

(h) Argon is an unreactive noble gas.

View solution

(i) Explain why argon is unreactive.

..... [1]

(ii) Give **one** use of argon.

..... [1]

[Total: 27]

View solution

Question 3 starts on the next page.

3 When aqueous sodium thiosulfate and dilute hydrochloric acid are mixed, a precipitate of insoluble sulfur is produced. This makes the mixture difficult to see through.

$$Na_2S_2O_3(aq) + 2HCl(aq) \rightarrow S(s) + 2NaCl(aq) + H_2O(l) + SO_2(g)$$

The time taken for the cross to disappear from view is measured.

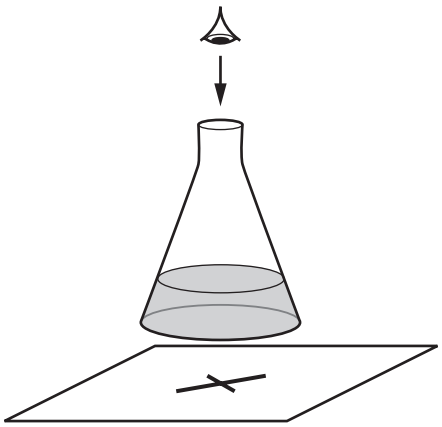

A student adds the following volumes of aqueous sodium thiosulfate, dilute hydrochloric acid and distilled water to the conical flask.

The time taken for the formation of the precipitate of sulfur to make the cross disappear from view is recorded.

experiment number	volume of sodium thiosulfate / cm^3	volume of hydrochloric acid / cm^3	volume of distilled water / cm^3	time taken for cross to disappear from view / s
1	10	10	40	56
2	20	10	30	28
3				

(a) State the order in which the aqueous sodium thiosulfate, hydrochloric acid and distilled water should be added to the flask.

.....

..... [1]

View solution

(b) In experiment 3 the student wanted the sodium thiosulfate to be double the concentration used in experiment 2.

(i) Complete the table to show the **volumes** which should be used and the **expected** time taken for the cross to disappear from view in experiment 3. [2]

(ii) Use collision theory to explain why increasing the concentration of sodium thiosulfate would change the rate of reaction.

.....

.....

.....

..... [2]

View solution

(c) The student repeated experiment 1 at a higher temperature.

Use collision theory to explain why the rate of reaction would increase.

.....

.....

.....

..... [3]

[Total: 8]

4 Electroplating steel objects with silver involves a three-step process.

step 1 A coating of copper is applied to the object.

step 2 A coating of nickel is applied to the object.

step 3 The coating of silver is applied to the object.

(a) A diagram of the apparatus used for **step 1** is shown.

View solution

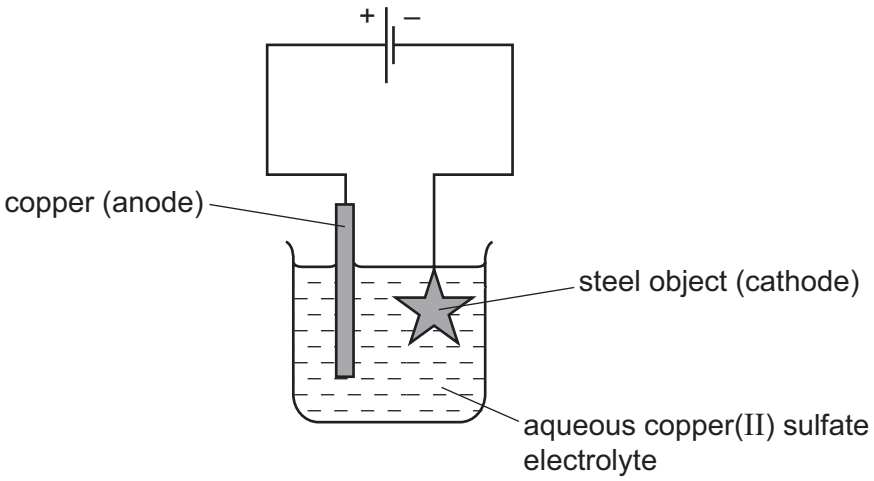

(i) The chemical process taking place on the surface of the object is

$$Cu^{2+}(aq) + 2e^{-} \rightarrow Cu(s)$$

Explain whether this process is oxidation or reduction.

.....

..... [1]

(ii) Explain why the concentration of copper ions in the electrolyte remains constant throughout **step 1**.

.....

.....

..... [2]

View solution

(b) Give **two** changes which would be needed in order to coat nickel onto the object in **step 2**.

.....

.....

.....

..... [2]

(c) Copper, nickel and silver are transition elements.
Typical physical properties of transition elements are a high density and a high melting point.

Give **three** different properties of transition metals which are not typical of other metals.

View solution

.....

.....

..... [3]

[Total: 8]

5 Sulfuric acid is produced by the Contact process. The steps of the Contact process are shown.

starting material **step 1** sulfur dioxide **step 2** sulfur trioxide **step 3** oleum **step 4** sulfuric acid

(a) Sulfur is a common starting material for the Contact process.

View solution

Name a source of sulfur.

..... [1]

(b) Describe **step 2**, giving reaction conditions and a chemical equation. Reference to reaction rate and yield is not required.

.....

.....

.....

.....

.....

.....

..... [5]

(c) **Step 3** involves adding sulfur trioxide to concentrated sulfuric acid to form oleum.

View solution

Complete the chemical equation for this reaction.

$$H_2SO_4 + SO_3 \rightarrow .....$$

[1]

(d) Dilute sulfuric acid is a typical acid.

A student adds excess dilute sulfuric acid to a sample of solid copper(II) carbonate in a test-tube.

View solution

(i) Give **three** observations the student would make.

.....

.....

..... [2]

(ii) Give the **names** of all products formed.

View solution

.....

..... [1]

(e) Concentrated sulfuric acid has different properties to dilute sulfuric acid.

When concentrated sulfuric acid is added to glucose, $C_6H_{12}O_6$, steam is given off and a black solid is formed.

View solution

(i) Name the black solid.

..... [1]

(ii) What type of reaction has occurred?

..... [1]

[Total: 12]

View solution

6 Petroleum is a source of many important chemicals.

(a) Name **two** industrial processes which must take place to produce alkenes from petroleum.

View solution

.....

..... [2]

(b) Ethene, $CH_2=CH_2$, and propene, $CH_2=CHCH_3$, can both be converted into polymers.

View solution

(i) What type of polymerisation takes place when ethene forms a polymer?

..... [1]

(ii) What is the empirical formula of the polymer formed from ethene?

View solution

..... [1]

(iii) Propene has the structural formula $CH_2=CHCH_3$.

View solution

Draw **two** repeat units of the polymer made from propene.

[2]

(c) Ethene will react with steam to form ethanol.

View solution

Propene will react with steam to form two isomers, both of which are alcohols.

Suggest the structures of these alcohols.

[2]

(d) Esters are organic chemicals noted for their characteristic smells. Ethanoic acid and methanol will react to form an ester.

View solution

(i) Name the catalyst needed to form an ester from ethanoic acid and methanol.

..... [1]

(ii) Name the ester formed when ethanoic acid reacts with methanol.

View solution

..... [1]

(iii) Draw the structure of the ester formed when ethanoic acid reacts with methanol. Show all bonds.

View solution

[2]

(iv) Give the name of a polyester.

..... [1]

[Total: 13]

View solution

Permission to reproduce items where third-party owned material protected by copyright is included has been sought and cleared where possible. Every reasonable effort has been made by the publisher (UCLES) to trace copyright holders, but if any items requiring clearance have unwittingly been included, the publisher will be pleased to make amends at the earliest possible opportunity.

To avoid the issue of disclosure of answer-related information to candidates, all copyright acknowledgements are reproduced online in the Cambridge International Examinations Copyright Acknowledgements Booklet. This is produced for each series of examinations and is freely available to download at www.cie.org.uk after the live examination series.

Cambridge International Examinations is part of the Cambridge Assessment Group. Cambridge Assessment is the brand name of University of Cambridge Local Examinations Syndicate (UCLES), which is itself a department of the University of Cambridge.

© UCLES 2016

The Periodic Table of Elements

Group																	
I	II											III	IV	V	VI	VII	VIII
							1 H hydrogen 1										2 He helium 4
3 Li lithium 7	4 Be beryllium 9											5 B boron 11	6 C carbon 12	7 N nitrogen 14	8 O oxygen 16	9 F fluorine 19	10 Ne neon 20
11 Na sodium 23	12 Mg magnesium 24											13 Al aluminium 27	14 Si silicon 28	15 P phosphorus 31	16 S sulfur 32	17 Cl chlorine 35.5	18 Ar argon 40
19 K potassium 39	20 Ca calcium 40	21 Sc scandium 45	22 Ti titanium 48	23 V vanadium 51	24 Cr chromium 52	25 Mn manganese 55	26 Fe iron 56	27 Co cobalt 59	28 Ni nickel 59	29 Cu copper 64	30 Zn zinc 65	31 Ga gallium 70	32 Ge germanium 73	33 As arsenic 75	34 Se selenium 79	35 Br bromine 80	36 Kr krypton 84
37 Rb rubidium 85	38 Sr strontium 88	39 Y yttrium 89	40 Zr zirconium 91	41 Nb niobium 93	42 Mo molybdenum 96	43 Tc technetium –	44 Ru ruthenium 101	45 Rh rhodium 103	46 Pd palladium 106	47 Ag silver 108	48 Cd cadmium 112	49 In indium 115	50 Sn tin 119	51 Sb antimony 122	52 Te tellurium 128	53 I iodine 127	54 Xe xenon 131
55 Cs caesium 133	56 Ba barium 137	57–71 lanthanoids	72 Hf hafnium 178	73 Ta tantalum 181	74 W tungsten 184	75 Re rhenium 186	76 Os osmium 190	77 Ir iridium 192	78 Pt platinum 195	79 Au gold 197	80 Hg mercury 201	81 Tl thallium 204	82 Pb lead 207	83 Bi bismuth 209	84 Po polonium –	85 At astatine –	86 Rn radon –
87 Fr francium –	88 Ra radium –	89–103 actinoids	104 Rf rutherfordium –	105 Db dubnium –	106 Sg seaborgium –	107 Bh bohrium –	108 Hs hassium –	109 Mt meitnerium –	110 Ds darmstadtium –	111 Rg roentgenium –	112 Cn copernicium –		114 Fl flerovium –		116 Lv livermorium –		

Key

atomic number
atomic symbol
name
relative atomic mass

lanthanoids	57 La lanthanum 139	58 Ce cerium 140	59 Pr praseodymium 141	60 Nd neodymium 144	61 Pm promethium –	62 Sm samarium 150	63 Eu europium 152	64 Gd gadolinium 157	65 Tb terbium 159	66 Dy dysprosium 163	67 Ho holmium 165	68 Er erbium 167	69 Tm thulium 169	70 Yb ytterbium 173	71 Lu lutetium 175
actinoids	89 Ac actinium –	90 Th thorium 232	91 Pa protactinium 231	92 U uranium 238	93 Np neptunium –	94 Pu plutonium –	95 Am americium –	96 Cm curium –	97 Bk berkelium –	98 Cf californium –	99 Es einsteinium –	100 Fm fermium –	101 Md mendelevium –	102 No nobelium –	103 Lr lawrencium –

The volume of one mole of any gas is 24 dm^3 at room temperature and pressure (r.t.p.)