Cambridge International Examinations
Cambridge International General Certificate of Secondary Education

CHEMISTRY **0620/22**

Paper 2 Multiple Choice (Extended) **May/June 2017**

45 minutes

Additional Materials: Multiple Choice Answer Sheet
Soft clean eraser
Soft pencil (type B or HB is recommended)

READ THESE INSTRUCTIONS FIRST

Write in soft pencil.
Do not use staples, paper clips, glue or correction fluid.
Write your name, Centre number and candidate number on the Answer Sheet in the spaces provided unless this has been done for you.
DO **NOT** WRITE IN ANY BARCODES.

There are **forty** questions on this paper. Answer **all** questions. For each question there are four possible answers **A**, **B**, **C** and **D**.
Choose the **one** you consider correct and record your choice in **soft pencil** on the separate Answer Sheet.

Read the instructions on the Answer Sheet very carefully.

Each correct answer will score one mark. A mark will not be deducted for a wrong answer.
Any rough working should be done in this booklet.
A copy of the Periodic Table is printed on page 16.
Electronic calculators may be used.

The syllabus is approved for use in England, Wales and Northern Ireland as a Cambridge International Level 1/Level 2 Certificate.

© UCLES 2017

CAMBRIDGE International Examinations

1 Small crystals of purple $KMnO_4$ (M_r = 158) and orange $K_2Cr_2O_7$ (M_r = 294) were placed at the centres of separate petri dishes filled with agar jelly. They were left to stand under the same physical conditions.

View solution

After some time, the colour of each substance had spread out as shown.

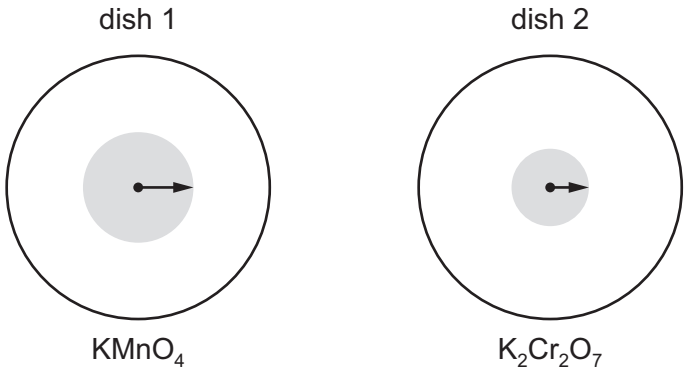

The lengths of the arrows indicate the relative distances travelled by particles of each substance.

Which statement is correct?

A Diffusion is faster in dish 1 because the mass of the particles is greater.

B Diffusion is faster in dish 2 because the mass of the particles is greater.

C Diffusion is slower in dish 1 because the mass of the particles is smaller.

D Diffusion is slower in dish 2 because the mass of the particles is greater.

2 Impurities change the melting and boiling points of substances.

View solution

Sodium chloride is added to a sample of pure water.

How does the addition of sodium chloride affect the melting point and boiling point of the water?

	melting point	boiling point
A	increases	increases
B	increases	decreases
C	decreases	increases
D	decreases	decreases

© UCLES 2017

3 The diagram shows a chromatogram of four substances.

View solution

Which substance has an R_f value of approximately 0.32?

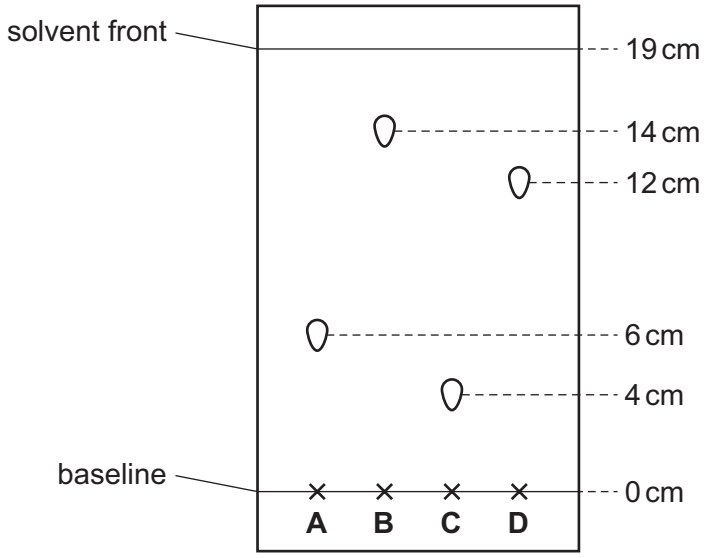

4 Which element does **not** form a stable ion with the same electronic structure as argon?

View solution

A aluminium

B chlorine

C phosphorus

D potassium

5 Graphite and diamond are both forms of the element carbon.

View solution

Which row shows the number of other carbon atoms that each carbon atom is covalently bonded to in graphite and diamond?

	graphite	diamond
A	3	3
B	3	4
C	4	3
D	4	4

© UCLES 2017

6 Which statement describes metallic bonding?

View solution

A The attraction between a lattice of negative ions and delocalised protons.

B The attraction between a lattice of positive ions and delocalised electrons.

C The attraction between delocalised protons and electrons.

D The attraction between oppositely charged ions.

7 Which equations are balanced?

View solution

1 $Fe_2O_3 + 3CO \rightarrow 2Fe + 3CO_2$

2 $ZnCO_3 + 2HCl \rightarrow ZnCl_2 + CO_2 + 2H_2O$

3 $Mg(NO_3)_2 + NaOH \rightarrow Mg(OH)_2 + 2NaNO_3$

4 $CaCO_3 + H_2SO_4 \rightarrow CaSO_4 + H_2O + CO_2$

A 1 and 2 **B** 1 and 4 **C** 2 and 3 **D** 3 and 4

8 Calcium carbide, CaC_2, reacts with water to form ethyne, C_2H_2, and calcium hydroxide.

View solution

The equation for the reaction is shown.

$$CaC_2(s) + 2H_2O(l) \rightarrow C_2H_2(g) + Ca(OH)_2(s)$$

Which volume of ethyne is produced when 6 g of water react completely with calcium carbide?

A 4 dm^3 **B** 8 dm^3 **C** 36 dm^3 **D** 72 dm^3

9 Which statement about electrolysis is correct?

View solution

A Electrons move through the electrolyte from the cathode to the anode.

B Electrons move towards the cathode in the external circuit.

C Negative ions move towards the anode in the external circuit.

D Positive ions move through the electrolyte towards the anode during electrolysis.

© UCLES 2017

10 The reactivity series for a number of different metals is shown.

View solution

most reactive →					least reactive
magnesium	zinc	iron	copper	silver	platinum

The diagram shows different metal strips dipped into an electrolyte.

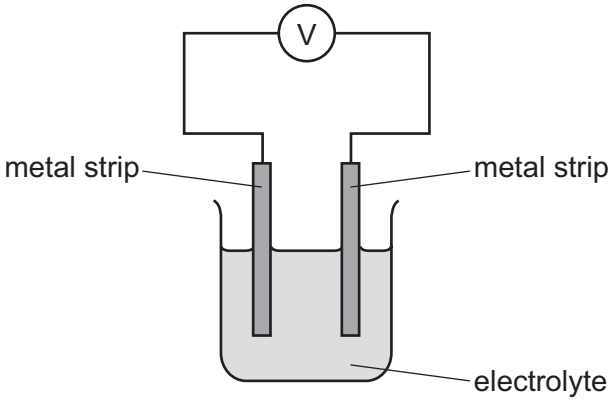

Which pair of metals produces the highest voltage?

A copper and magnesium

B magnesium and platinum

C magnesium and zinc

D silver and platinum

11 Which statement about fuels is correct?

View solution

A Heat energy can only be produced by burning fuels.

B Hydrogen is used as a fuel although it is difficult to store.

C Methane is a good fuel because it produces only water when burned.

D Uranium is burned in air to produce energy.

12 Which statements about exothermic and endothermic reactions are correct?

View solution

1 During an exothermic reaction, heat is given out.

2 The temperature of an endothermic reaction goes up because heat is taken in.

3 Burning methane in the air is an exothermic reaction.

A 1, 2 and 3 **B** 1 and 2 only **C** 1 and 3 only **D** 2 and 3 only

© UCLES 2017

13 The equation for the reaction between hydrogen and chlorine is shown.

View solution

$$H_2(g) + Cl_2(g) \rightarrow 2HCl(g)$$

The reaction is exothermic.

The bond energies are shown in the table.

bond	bond energy in kJ / mol
Cl–Cl	+240
H–Cl	+430
H–H	+436

What is the energy change for the reaction?

A –1536 kJ / mol

B –184 kJ / mol

C +184 kJ / mol

D +246 kJ / mol

14 A gas is produced when calcium carbonate is heated.

View solution

Which type of change is this?

A chemical

B exothermic

C physical

D separation

© UCLES 2017

15 A student was investigating the reaction between marble chips and dilute hydrochloric acid.

View solution

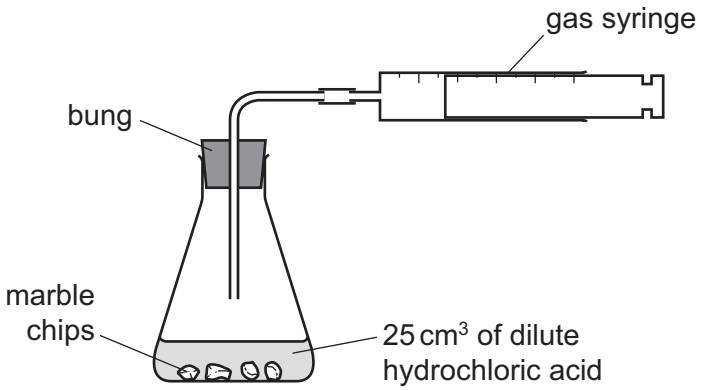

Which changes slow down the rate of reaction?

	temperature of acid	concentration of acid	surface area of marble chips
A	decrease	decrease	decrease
B	decrease	decrease	increase
C	increase	decrease	decrease
D	increase	increase	increase

16 The reaction used to manufacture ammonia from nitrogen and hydrogen is reversible.

View solution

An equilibrium can be established between ammonia, nitrogen and hydrogen.

Which statement describes the equilibrium?

A Both the forward reaction and the backward reaction have the same rate.

B The rate of the backward reaction is greater than the rate of the forward reaction.

C The rate of the forward reaction is greater than the rate of the backward reaction.

D The forward and backward reactions have both stopped.

17 An example of a redox reaction is shown.

View solution

$$Zn + Cu^{2+} \rightarrow Zn^{2+} + Cu$$

Which statement about the reaction is correct?

A Zn is the oxidising agent and it oxidises Cu^{2+}.

B Zn is the oxidising agent and it reduces Cu^{2+}.

C Zn is the reducing agent and it oxidises Cu^{2+}.

D Zn is the reducing agent and it reduces Cu^{2+}.

© UCLES 2017

18 Which type of oxide is aluminium oxide?

View solution

A acidic

B amphoteric

C basic

D neutral

19 Which statements about a weak acid, such as ethanoic acid, are correct?

View solution

1 It reacts with a carbonate.

2 It does not neutralise aqueous sodium hydroxide solution.

3 It turns red litmus blue.

4 It is only partially ionised in aqueous solution.

A 1 and 2 **B** 1 and 4 **C** 2 and 3 **D** 3 and 4

20 Silver chloride is a white solid which is insoluble in water.

View solution

Which statement describes how a sample of pure silver chloride can be made?

A Add aqueous silver nitrate to aqueous sodium chloride and then filter.

B Add aqueous silver nitrate to dilute hydrochloric acid, evaporate and then crystallise.

C Add silver carbonate to dilute hydrochloric acid, evaporate and then crystallise.

D Add silver to dilute hydrochloric acid, filter and then wash the residue.

21 Dilute sulfuric acid is added to two separate aqueous solutions, X and Y. The observations are shown.

View solution

solution X	white precipitate
solution Y	bubbles of a colourless gas

Which row shows the ions present in the solutions?

	solution X	solution Y
A	Ba^{2+}	CO_3^{2-}
B	Ca^{2+}	Cl^-
C	Cu^{2+}	CO_3^{2-}
D	Fe^{2+}	NO_3^-

© UCLES 2017

22 Which element is less reactive than the other members of its group in the Periodic Table?

View solution

A astatine

B caesium

C fluorine

D rubidium

23 The elements oxygen and sulfur are in the same group of the Periodic Table.

View solution

Which statement about oxygen and sulfur is **not** correct?

A They are non-metals.

B They have giant covalent structures.

C They have six electrons in their outer shells.

D They react together to form an acidic oxide.

24 Why are weather balloons sometimes filled with helium rather than hydrogen?

View solution

A Helium is found in air.

B Helium is less dense than hydrogen.

C Helium is more dense than hydrogen.

D Helium is unreactive.

25 Which process is involved in the extraction of zinc from zinc blende?

View solution

A Cryolite is added to lower the melting point of zinc blende.

B Molten zinc blende is electrolysed.

C Zinc blende is heated with carbon.

D Zinc blende is roasted in air.

© UCLES 2017

26 Element E:

View solution

- forms an alloy
- has a basic oxide
- is below hydrogen in the reactivity series.

What is E?

A carbon

B copper

C sulfur

D zinc

27 A list of metals is shown.

View solution

aluminium

copper

iron

magnesium

silver

zinc

Which metal will displace all of the other metals from aqueous solutions of their salts?

A aluminium

B iron

C magnesium

D zinc

28 Stainless steel is an alloy of iron and other metals. It is strong and does not rust but it costs much more than normal steel.

View solution

What is **not** made from stainless steel?

A cutlery

B pipes in a chemical factory

C railway lines

D saucepans

© UCLES 2017

29 The diagram shows some uses of water in the home.

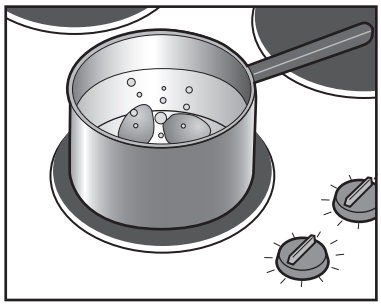

1

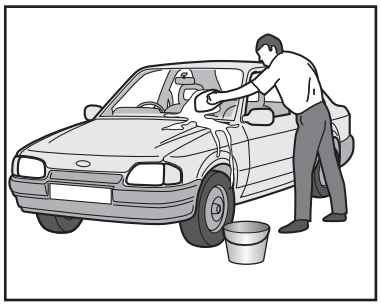

2

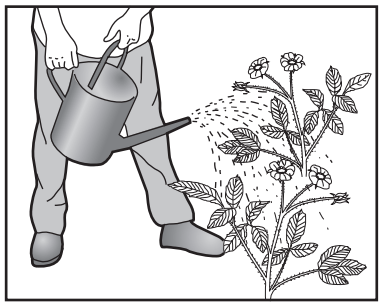

3

View solution

For which uses is it important for the water to have been treated?

A 1 only **B** 2 only **C** 3 only **D** 1, 2 and 3

View solution

30 The carbon cycle includes the processes combustion, photosynthesis and respiration.

Which row shows how each process changes the amount of carbon dioxide in the atmosphere?

	combustion	photosynthesis	respiration
A	decreases	decreases	increases
B	decreases	increases	decreases
C	increases	decreases	increases
D	increases	increases	decreases

View solution

31 Which statement about the conditions used in the Haber process is **not** correct?

A A high temperature is used because the forward reaction is exothermic.

B A high pressure is used because there are fewer moles of gas in the products than in the reactants.

C An iron catalyst is used to increase the rate of the forward reaction.

D The unreacted hydrogen and nitrogen are recycled to increase the amount of ammonia produced.

View solution

32 Which chemical reaction decreases pollution in the air?

A $S + O_2 \rightarrow SO_2$

B $N_2 + O_2 \rightarrow 2NO$

C $2CH_4 + 3O_2 \rightarrow 2CO + 4H_2O$

D $2NO + 2CO \rightarrow 2CO_2 + N_2$

© UCLES 2017

33 Which statement about sulfuric acid is correct?

View solution

A It is made by the Haber process.

B It is made in the atmosphere by the action of lightning.

C It reacts with ammonia to produce a fertiliser.

D It reacts with copper metal to produce hydrogen gas.

34 Statements about methods of manufacture and uses of calcium oxide are shown.

View solution

1 It is manufactured by reacting acids with calcium carbonate.

2 It is manufactured by heating calcium carbonate.

3 It is used to desulfurise flue gases.

4 It is used to treat alkaline soil.

Which statements are correct?

A 1 and 2 **B** 1 and 4 **C** 2 and 3 **D** 3 and 4

35 The industrial fractional distillation of petroleum is shown.

View solution

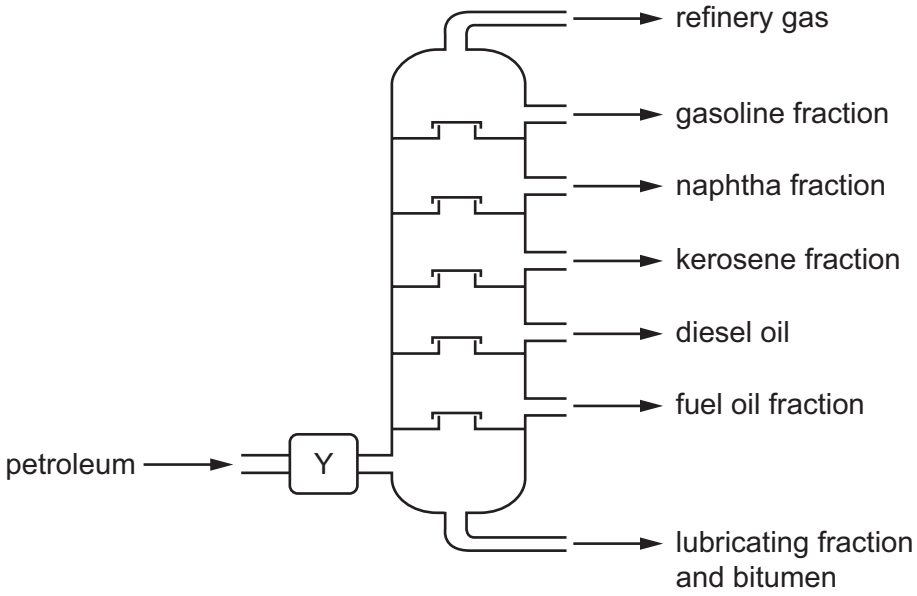

Which process happens at Y?

A burning

B condensation

C cracking

D evaporation

36 Which statement about homologous series is **not** correct?

View solution

A Alkenes have the same general formula, C_nH_{2n+2}.

B Each member of the homologous series of alkanes differs from the next by CH_2.

C The members of a homologous series all have similar chemical properties.

D The members of a homologous series all have the same functional group.

37 The diagram shows part of the molecule of a polymer.

View solution

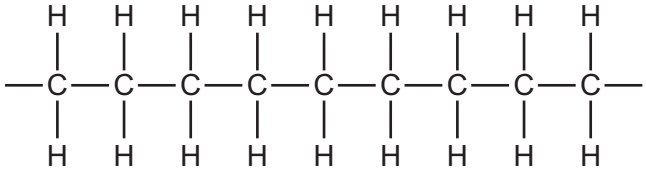

Which diagram shows the monomer from which this polymer could be manufactured?

A

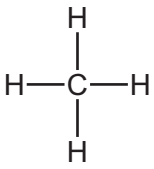

B

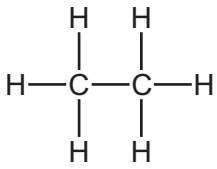

C

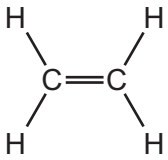

D

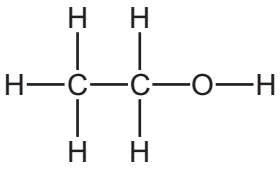

38 Ethanol is manufactured by fermentation or by the catalytic addition of steam to ethene.

View solution

What is an advantage of ethanol manufacture by fermentation instead of by the catalytic addition of steam to ethene?

A Ethanol manufactured by fermentation is purified by distillation.

B Ethanol manufacture by fermentation produces purer ethanol.

C Ethanol manufacture by fermentation uses large areas of land.

D Ethanol manufacture by fermentation uses renewable resources.

39 The formula of an ester is $CH_3CH_2CH_2COOCH_2CH_2CH_3$.

View solution

Which acid and alcohol react together to make the ester?

	acid	alcohol
A	butanoic acid	butanol
B	butanoic acid	propanol
C	propanoic acid	butanol
D	propanoic acid	propanol

© UCLES 2017

40 Polyesters and polyamides are types of synthetic polymer.

View solution

Which statements are correct?

1 They are made by addition polymerisation.

2 They are made by condensation polymerisation.

3 The monomers from which they are made are unsaturated hydrocarbons.

4 The monomers from which they are made contain reactive functional groups at their ends.

A 1 and 3 **B** 1 and 4 **C** 2 and 3 **D** 2 and 4

© UCLES 2017

BLANK PAGE

Permission to reproduce items where third-party owned material protected by copyright is included has been sought and cleared where possible. Every reasonable effort has been made by the publisher (UCLES) to trace copyright holders, but if any items requiring clearance have unwittingly been included, the publisher will be pleased to make amends at the earliest possible opportunity.

To avoid the issue of disclosure of answer-related information to candidates, all copyright acknowledgements are reproduced online in the Cambridge International Examinations Copyright Acknowledgements Booklet. This is produced for each series of examinations and is freely available to download at www.cie.org.uk after the live examination series.

Cambridge International Examinations is part of the Cambridge Assessment Group. Cambridge Assessment is the brand name of University of Cambridge Local Examinations Syndicate (UCLES), which is itself a department of the University of Cambridge.

© UCLES 2017

The Periodic Table of Elements

Group																	
I	II											III	IV	V	VI	VII	VIII
							1 H hydrogen 1										2 He helium 4
3 Li lithium 7	4 Be beryllium 9											5 B boron 11	6 C carbon 12	7 N nitrogen 14	8 O oxygen 16	9 F fluorine 19	10 Ne neon 20
11 Na sodium 23	12 Mg magnesium 24											13 Al aluminium 27	14 Si silicon 28	15 P phosphorus 31	16 S sulfur 32	17 Cl chlorine 35.5	18 Ar argon 40
19 K potassium 39	20 Ca calcium 40	21 Sc scandium 45	22 Ti titanium 48	23 V vanadium 51	24 Cr chromium 52	25 Mn manganese 55	26 Fe iron 56	27 Co cobalt 59	28 Ni nickel 59	29 Cu copper 64	30 Zn zinc 65	31 Ga gallium 70	32 Ge germanium 73	33 As arsenic 75	34 Se selenium 79	35 Br bromine 80	36 Kr krypton 84
37 Rb rubidium 85	38 Sr strontium 88	39 Y yttrium 89	40 Zr zirconium 91	41 Nb niobium 93	42 Mo molybdenum 96	43 Tc technetium –	44 Ru ruthenium 101	45 Rh rhodium 103	46 Pd palladium 106	47 Ag silver 108	48 Cd cadmium 112	49 In indium 115	50 Sn tin 119	51 Sb antimony 122	52 Te tellurium 128	53 I iodine 127	54 Xe xenon 131
55 Cs caesium 133	56 Ba barium 137	57–71 lanthanoids	72 Hf hafnium 178	73 Ta tantalum 181	74 W tungsten 184	75 Re rhenium 186	76 Os osmium 190	77 Ir iridium 192	78 Pt platinum 195	79 Au gold 197	80 Hg mercury 201	81 Tl thallium 204	82 Pb lead 207	83 Bi bismuth 209	84 Po polonium –	85 At astatine –	86 Rn radon –
87 Fr francium –	88 Ra radium –	89–103 actinoids	104 Rf rutherfordium –	105 Db dubnium –	106 Sg seaborgium –	107 Bh bohrium –	108 Hs hassium –	109 Mt meitnerium –	110 Ds darmstadtium –	111 Rg roentgenium –	112 Cn copernicium –		114 Fl flerovium –		116 Lv livermorium –		

Key

atomic number
atomic symbol
name
relative atomic mass

lanthanoids	57 La lanthanum 139	58 Ce cerium 140	59 Pr praseodymium 141	60 Nd neodymium 144	61 Pm promethium –	62 Sm samarium 150	63 Eu europium 152	64 Gd gadolinium 157	65 Tb terbium 159	66 Dy dysprosium 163	67 Ho holmium 165	68 Er erbium 167	69 Tm thulium 169	70 Yb ytterbium 173	71 Lu lutetium 175
actinoids	89 Ac actinium –	90 Th thorium 232	91 Pa protactinium 231	92 U uranium 238	93 Np neptunium –	94 Pu plutonium –	95 Am americium –	96 Cm curium –	97 Bk berkelium –	98 Cf californium –	99 Es einsteinium –	100 Fm fermium –	101 Md mendelevium –	102 No nobelium –	103 Lr lawrencium –

The volume of one mole of any gas is 24 dm^3 at room temperature and pressure (r.t.p.).