Cambridge IGCSE

Cambridge International Examinations
Cambridge International General Certificate of Secondary Education

CANDIDATE NAME									
CENTRE NUMBER						CANDIDATE NUMBER				

CHEMISTRY **0620/41**

Paper 4 Theory (Extended) **May/June 2018**

1 hour 15 minutes

Candidates answer on the Question Paper.

No Additional Materials are required.

READ THESE INSTRUCTIONS FIRST

Write your Centre number, candidate number and name on all the work you hand in.
Write in dark blue or black pen.
You may use an HB pencil for any diagrams or graphs.
Do not use staples, paper clips, glue or correction fluid.
DO **NOT** WRITE IN ANY BARCODES.

Answer **all** questions.
Electronic calculators may be used.
A copy of the Periodic Table is printed on page 12.
You may lose marks if you do not show your working or if you do not use appropriate units.

At the end of the examination, fasten all your work securely together.
The number of marks is given in brackets [ ] at the end of each question or part question.

The syllabus is approved for use in England, Wales and Northern Ireland as a Cambridge International Level 1/Level 2 Certificate.

© UCLES 2018

CAMBRIDGE International Examinations

1 Substances can be classified as elements, compounds or mixtures.

View solution

(a) What is meant by the term *compound*?

.....

.....

..... [2]

(b) Mixtures can be separated by physical processes.

A sequence of physical processes can be used to separate common salt (sodium chloride) from a mixture containing sand and common salt only.

Give the order and the correct scientific term for the physical processes used to separate the common salt from the mixture.

1 .....

2 .....

3 .....

[4]

View solution

The boiling points of four different alcohols, **A**, **B**, **C** and **D**, are shown.

alcohol	**A**	**B**	**C**	**D**
boiling point / °C	56	78	122	160

(c) A student suggested that the apparatus shown could be used to separate the mixture of alcohols.

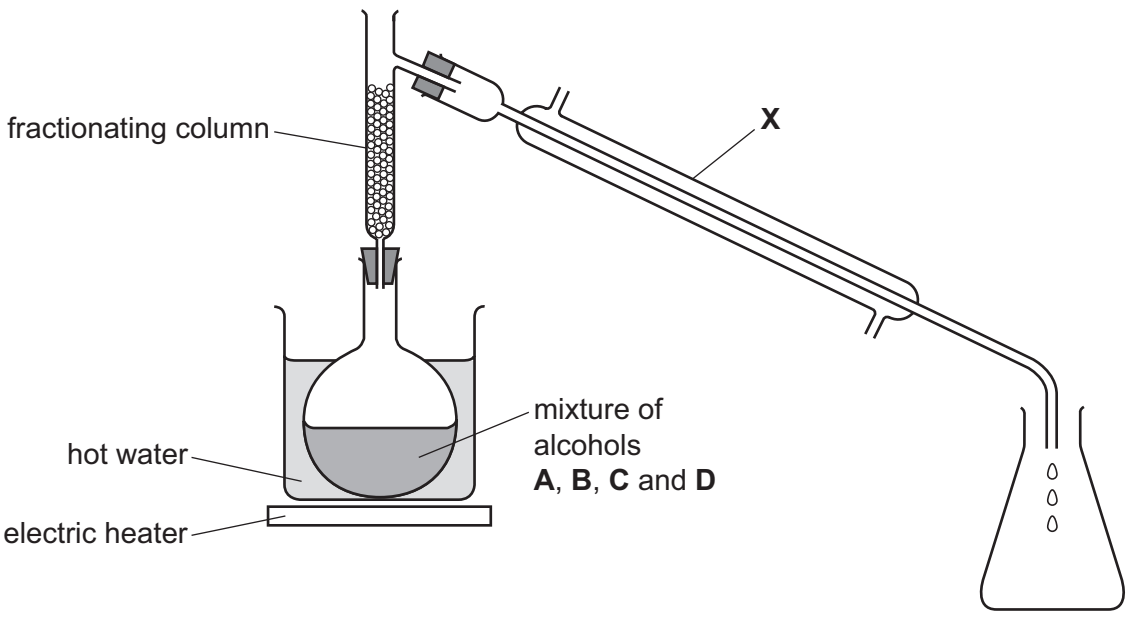

(i) Apparatus **X** needs to have cold water flowing through it.

View solution

- Draw an arrow on the diagram to show where the cold water enters apparatus **X**.
- Name apparatus **X**.

.....

[2]

(ii) Part of the fractionating column is missing. This means that the experiment will not work.

- Draw on the diagram the part of the fractionating column which is missing. View solution
- Explain why the experiment will **not** work with this part of the fractionating column missing.

.....

.....

[2]

(iii) Suggest why a Bunsen burner is **not** used to heat the flask. View solution

..... [1]

(iv) A hot water bath cannot be used to separate alcohols **C** and **D**.

View solution

Explain why.

.....

.....

..... [2]

[Total: 13]

2 Flerovium, F*l*, atomic number 114, was first made in research laboratories in 1998.

(a) Flerovium was made by bombarding atoms of plutonium, Pu, atomic number 94, with atoms of element **Z**.

- The nucleus of **one** atom of plutonium combined with the nucleus of **one** atom of element **Z**.
- This formed the nucleus of **one** atom of flerovium.

Suggest the identity of element **Z**.

View solution

..... [1]

(b) In which period of the Periodic Table is flerovium?

View solution

..... [1]

(c) Predict the number of outer shell electrons in an atom of flerovium.

View solution

..... [1]

(d) Two isotopes of flerovium are ^{286}F*l* and ^{289}F*l*. The nuclei of both of these isotopes are unstable and emit energy when they split up.

(i) State the term used to describe isotopes with unstable nuclei.

View solution

..... [1]

(ii) Complete the table to show the number of protons, neutrons and electrons in the atoms of the isotopes shown.

View solution

isotope	number of protons	number of neutrons	number of electrons
^{286}F*l*			
^{289}F*l*			

[2]

(e) Only a relatively small number of atoms of flerovium have been made in the laboratory and the properties of flerovium have not yet been investigated.

It has been suggested that flerovium is a typical metal.

View solution

(i) Suggest **two** physical properties of flerovium.

1 .....

2 .....

[2]

(ii) Suggest **one** chemical property of flerovium oxide.

..... [1]

[Total: 9]

3 This question is about iron.

(a) Three of the raw materials added to a blast furnace used to extract iron from hematite are coke, hematite and limestone.

View solution

Name **one** other raw material added to the blast furnace.

..... [1]

(b) A series of reactions occurs in a blast furnace during the extraction of iron from hematite.

View solution

Describe these reactions.
Include:

- **one** chemical equation for the reduction of hematite
- **one** chemical equation for the formation of slag.

.....

.....

.....

.....

.....

.....

.....

..... [5]

(c) The iron extracted from hematite using a blast furnace is impure.

View solution

Identify the main impurity in this iron and explain how it is removed in the steel-making process.

main impurity .....

how it is removed .....

.....

.....

[3]

[Total: 9]

4 This question is about masses, volumes and moles.

(a) Which term is defined by the following statement?

View solution

The average mass of naturally occurring atoms of an element on a scale where the ^{12}C atom has a mass of exactly 12 units.

..... [1]

(b) Butane, C_4H_{10}, has a relative **molecular** mass of 58.
Potassium fluoride, KF, has a relative **formula** mass of 58.

View solution

Explain why the term relative molecular mass can be used for butane but **cannot** be used for potassium fluoride.

.....

..... [2]

(c) A 0.095 g sample of gaseous element **Y** occupies 60.0 cm^3 at room temperature and pressure.

- Determine the number of moles of element **Y** in 60.0 cm^3.

View solution

moles of element **Y** = ... mol

- Calculate the relative molecular mass of element **Y** and hence suggest the identity of element **Y**.

relative molecular mass = ...

identity of element **Y** = ...
[3]

(d) A 1.68 g sample of phosphorus was burned and formed 3.87 g of an oxide of phosphorus.

View solution

Calculate the empirical formula of this oxide of phosphorus.

empirical formula = ... [4]

(e) Another oxide of phosphorus has the empirical formula P_2O_3.
One molecule of this oxide of phosphorus contains four atoms of phosphorus.

View solution

Calculate the mass of **one** mole of this oxide of phosphorus.

mass = ... g [2]

[Total: 12]

© UCLES 2018

5 **(a)** The table gives some chemical properties of transition elements and their compounds, and of Group I elements and their compounds.

View solution

chemical property	transition elements	Group I elements
ability to act as catalysts	yes	no
exist as coloured compounds	yes	no

(i) What is meant by the term *catalyst*?

.....

.....

..... [2]

(ii) Give **one** other chemical property shown by transition elements which is **not** shown by Group I elements.

..... [1]

(b) Give **two** physical properties shown by transition elements which are **not** shown by Group I elements.

1 .....

2 .....
[2]

(c) The energy level diagram shows the energy profile for the reaction between zinc and dilute sulfuric acid.

View solution

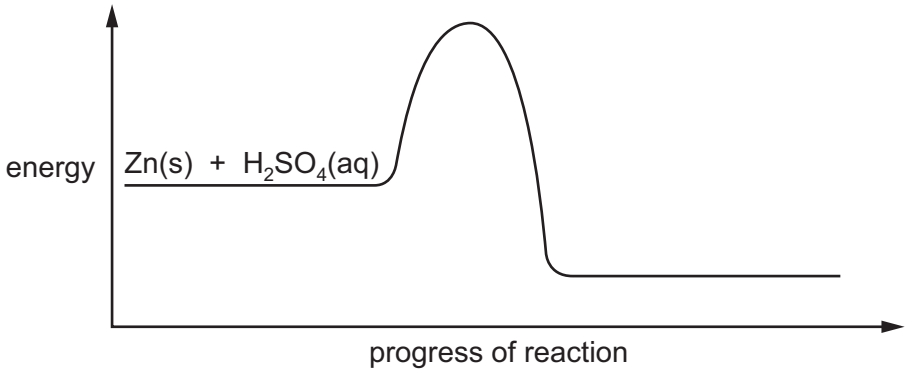

(i) Complete the diagram by adding the formulae of the products. Include state symbols. [3]

(ii) Draw an arrow on the diagram to represent the activation energy. [1]

(iii) Is the reaction endothermic or exothermic? Explain your answer.

.....

..... [1]

(d) The reaction between zinc and dilute sulfuric acid can be catalysed by the addition of aqueous copper(II) sulfate.

View solution

On the diagram, add the energy profile for the catalysed reaction.

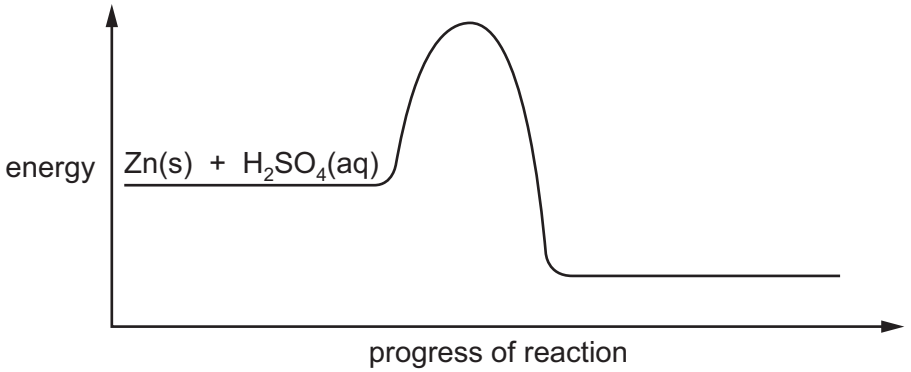

[1]

(e) A student electrolyses aqueous copper(II) sulfate using the apparatus shown.

View solution

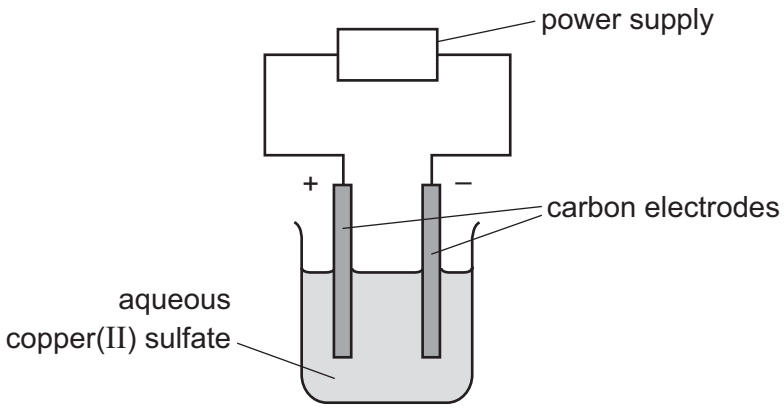

Oxygen gas forms at the positive electrode (anode).

(i) Write an ionic half-equation for the reaction at the negative electrode (cathode). Include state symbols.

..... [3]

(ii) Describe what the student observes at the negative electrode.

..... [1]

(iii) Give **two other** observations which the student makes during the electrolysis.

1 .....

2 .....

[2]

(iv) What difference would the student observe at the positive electrode if the aqueous copper(II) sulfate were replaced by concentrated aqueous copper(II) chloride?

..... [1]

[Total: 18]

6 The table shows the structures of four hydrocarbons.

P	Q	R	S
$CH_3–CH_3$	$CH_2=CH_2$	$CH_2=CH–CH_3$	$CH_2=CH–CH_2–CH_3$

(a) Why are compounds **P**, **Q**, **R** and **S** known as hydrocarbons?

View solution

.....

..... [2]

(b) Compound **P** is saturated.

View solution

What is meant by the term *saturated*?

.....

..... [1]

(c) Compound **P** undergoes a substitution reaction with chlorine.

View solution

(i) What is meant by the term *substitution reaction*?

.....

..... [1]

(ii) State a condition required for this reaction to occur.

View solution

..... [1]

(iii) Write a chemical equation for this reaction.

View solution

..... [2]

(d) Compound **R** undergoes an addition reaction with bromine.

View solution

(i) Why is this reaction an addition reaction?

..... [1]

(ii) A compound containing bromine is formed in this reaction.

View solution

Draw the structure of this compound. Show all of the atoms and all of the bonds.

[1]

(e) Draw the structure of an unbranched isomer of compound **S**. Show all of the atoms and all of the bonds. Name this unbranched isomer of compound **S**.

View solution

structure

name .....

[2]

(f) Compound **Q** undergoes polymerisation.

View solution

(i) Name the polymer formed.

..... [1]

(ii) Complete the chemical equation to show the polymerisation of compound **Q**.

View solution

$n\ CH_2{=}CH_2 \rightarrow$

[2]

(g) Amino acids undergo polymerisation to form proteins. Part of a protein molecule with the linkages missing is shown.

View solution

Draw the linkages on the diagram. Show all of the atoms and all of the bonds.

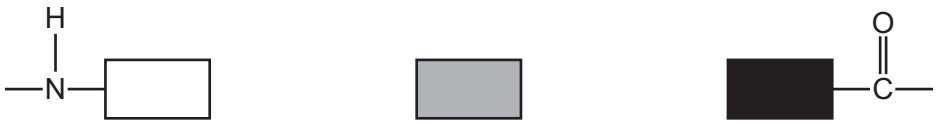

[2]

(h) The structure shows an ester.

View solution

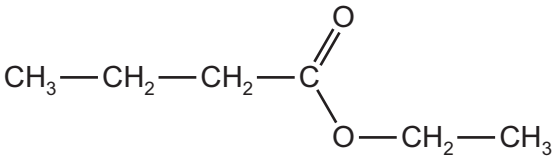

Write the word equation for a reaction which could be used to make this ester.

..... [3]

[Total: 19]

To avoid the issue of disclosure of answer-related information to candidates, all copyright acknowledgements are reproduced online in the Cambridge International Examinations Copyright Acknowledgements Booklet. This is produced for each series of examinations and is freely available to download at www.cie.org.uk after the live examination series.

© UCLES 2018

The Periodic Table of Elements

Group																	
I	II											III	IV	V	VI	VII	VIII
							1 H hydrogen 1										2 He helium 4
3 Li lithium 7	4 Be beryllium 9											5 B boron 11	6 C carbon 12	7 N nitrogen 14	8 O oxygen 16	9 F fluorine 19	10 Ne neon 20
11 Na sodium 23	12 Mg magnesium 24											13 Al aluminium 27	14 Si silicon 28	15 P phosphorus 31	16 S sulfur 32	17 Cl chlorine 35.5	18 Ar argon 40
19 K potassium 39	20 Ca calcium 40	21 Sc scandium 45	22 Ti titanium 48	23 V vanadium 51	24 Cr chromium 52	25 Mn manganese 55	26 Fe iron 56	27 Co cobalt 59	28 Ni nickel 59	29 Cu copper 64	30 Zn zinc 65	31 Ga gallium 70	32 Ge germanium 73	33 As arsenic 75	34 Se selenium 79	35 Br bromine 80	36 Kr krypton 84
37 Rb rubidium 85	38 Sr strontium 88	39 Y yttrium 89	40 Zr zirconium 91	41 Nb niobium 93	42 Mo molybdenum 96	43 Tc technetium –	44 Ru ruthenium 101	45 Rh rhodium 103	46 Pd palladium 106	47 Ag silver 108	48 Cd cadmium 112	49 In indium 115	50 Sn tin 119	51 Sb antimony 122	52 Te tellurium 128	53 I iodine 127	54 Xe xenon 131
55 Cs caesium 133	56 Ba barium 137	57–71 lanthanoids	72 Hf hafnium 178	73 Ta tantalum 181	74 W tungsten 184	75 Re rhenium 186	76 Os osmium 190	77 Ir iridium 192	78 Pt platinum 195	79 Au gold 197	80 Hg mercury 201	81 Tl thallium 204	82 Pb lead 207	83 Bi bismuth 209	84 Po polonium –	85 At astatine –	86 Rn radon –
87 Fr francium –	88 Ra radium –	89–103 actinoids	104 Rf rutherfordium –	105 Db dubnium –	106 Sg seaborgium –	107 Bh bohrium –	108 Hs hassium –	109 Mt meitnerium –	110 Ds darmstadtium –	111 Rg roentgenium –	112 Cn copernicium –		114 Fl flerovium –		116 Lv livermorium –		

Key

atomic number
atomic symbol
name
relative atomic mass

lanthanoids	57 La lanthanum 139	58 Ce cerium 140	59 Pr praseodymium 141	60 Nd neodymium 144	61 Pm promethium –	62 Sm samarium 150	63 Eu europium 152	64 Gd gadolinium 157	65 Tb terbium 159	66 Dy dysprosium 163	67 Ho holmium 165	68 Er erbium 167	69 Tm thulium 169	70 Yb ytterbium 173	71 Lu lutetium 175
actinoids	89 Ac actinium –	90 Th thorium 232	91 Pa protactinium 231	92 U uranium 238	93 Np neptunium –	94 Pu plutonium –	95 Am americium –	96 Cm curium –	97 Bk berkelium –	98 Cf californium –	99 Es einsteinium –	100 Fm fermium –	101 Md mendelevium –	102 No nobelium –	103 Lr lawrencium –

The volume of one mole of any gas is 24 dm^3 at room temperature and pressure (r.t.p.).