Cambridge Assessment International Education

Cambridge IGCSE™

CANDIDATE NAME									
CENTRE NUMBER						CANDIDATE NUMBER			

CHEMISTRY **0620/61**

Paper 6 Alternative to Practical **May/June 2021**

1 hour

You must answer on the question paper.

No additional materials are needed.

INSTRUCTIONS

- Answer **all** questions.
- Use a black or dark blue pen. You may use an HB pencil for any diagrams or graphs.
- Write your name, centre number and candidate number in the boxes at the top of the page.
- Write your answer to each question in the space provided.
- Do **not** use an erasable pen or correction fluid.
- Do **not** write on any bar codes.
- You may use a calculator.
- You should show all your working and use appropriate units.

INFORMATION

- The total mark for this paper is 40.
- The number of marks for each question or part question is shown in brackets [ ].

This document has **12** pages. Any blank pages are indicated.

© UCLES 2021

1 Many indicators are coloured substances obtained from plants.

A student extracted the coloured substances from some berries using the method shown.

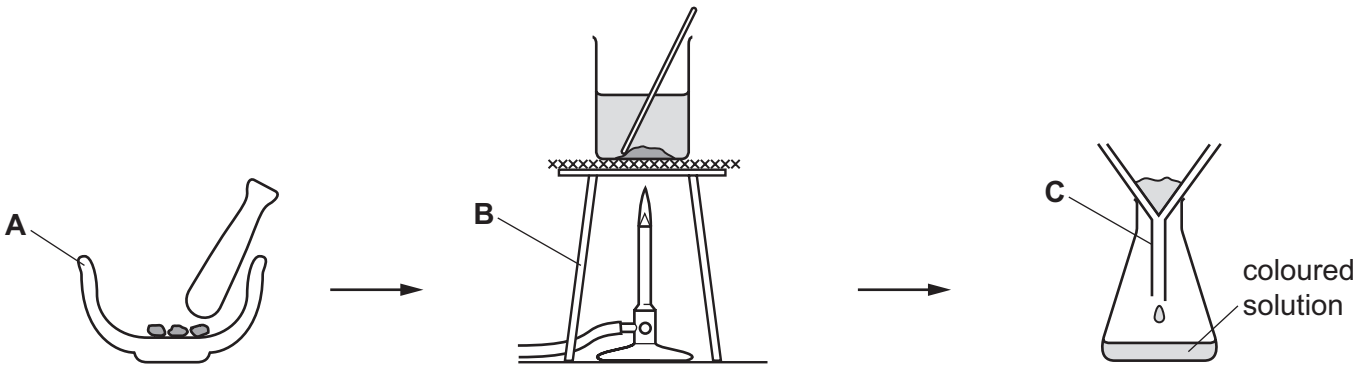

the berries were crushed

the crushed berries were heated in water to form a coloured solution

the solid was removed from the coloured solution

(a) Name the items of apparatus labelled **A**, **B** and **C**.

View solution

A .....

B .....

C .....

[3]

(b) The student analysed the coloured solution using chromatography.

View solution

(i) Complete the diagram to show:

- where the spot of coloured solution should be placed on the paper
- the level of the solvent in the beaker.

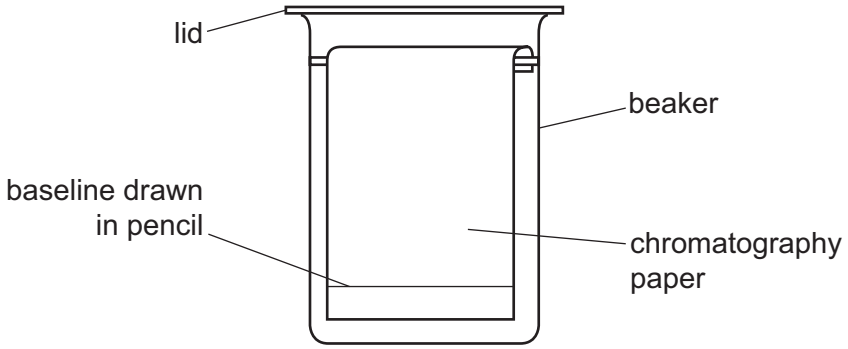

[2]

(ii) Explain why pencil is used to draw the baseline on the chromatography paper.

View solution

.....

..... [1]

(c) The student made two chromatograms. After chromatography, one chromatogram was dipped in dilute hydrochloric acid and one was dipped in aqueous sodium hydroxide.

View solution

The results are shown.

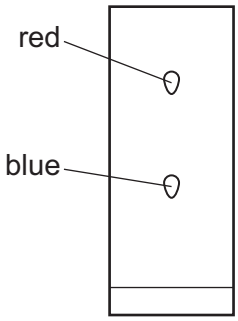

chromatogram dipped in dilute hydrochloric acid

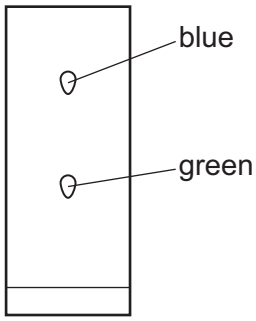

chromatogram dipped in aqueous sodium hydroxide

(i) Determine the number of coloured substances in the solution obtained from the berries.

..... [1]

(ii) The table gives the colours of some indicators in acid and alkali.

View solution

name of indicator	colour in acid	colour in alkali
anthocyanin	red	blue
bromothymol blue	yellow	blue
congo red	blue	red
methyl purple	purple	green

Use the data in the table and the results to give a possible identity for **one** indicator in the berries.

..... [1]

[Total: 8]

BLANK PAGE

2 A student investigated the temperature decrease when sodium hydrogencarbonate reacts with dilute hydrochloric acid.

The student did six experiments.

Experiment 1

- Using a measuring cylinder, 25 cm^3 of dilute hydrochloric acid was poured into a conical flask.
- The initial temperature of the acid was measured using a thermometer.
- 1 g of sodium hydrogencarbonate was added to the conical flask. At the same time a stop-clock was started.
- The acid and sodium hydrogencarbonate mixture in the conical flask was stirred continuously using the thermometer.
- The temperature of the mixture after 1 minute was measured.
- The conical flask was rinsed with distilled water.

Experiment 2

- Experiment 1 was repeated using 2 g of sodium hydrogencarbonate instead of 1 g.

Experiment 3

- Experiment 1 was repeated using 3 g of sodium hydrogencarbonate instead of 1 g.

Experiment 4

- Experiment 1 was repeated using 5 g of sodium hydrogencarbonate instead of 1 g.

Experiment 5

- Experiment 1 was repeated using 6 g of sodium hydrogencarbonate instead of 1 g.

Experiment 6

- Experiment 1 was repeated using 7 g of sodium hydrogencarbonate instead of 1 g.

(a) Use the thermometer diagrams to complete the table and calculate the temperature decreases.

experiment	mass of sodium hydrogencarbonate / g	thermometer diagram	initial temperature of acid / °C	thermometer diagram	temperature after 1 minute / °C	temperature decrease / °C
1	1			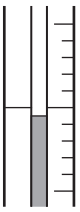		
2	2			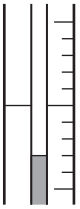		
3	3			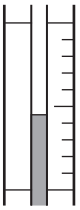		
4	5	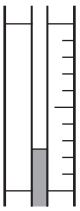				
5	6	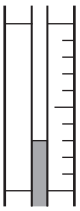		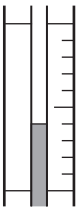		
6	7			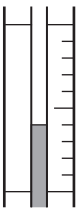		

[4]

View solution

(b) Plot the results from Experiments 1 to 6 on the grid.

Draw **two** best-fit straight lines through your points. The first straight line should be for the first three points and must pass through (0,0). The second straight line should be for the last three points and must be horizontal. Extend your straight lines so that they meet each other.

View solution

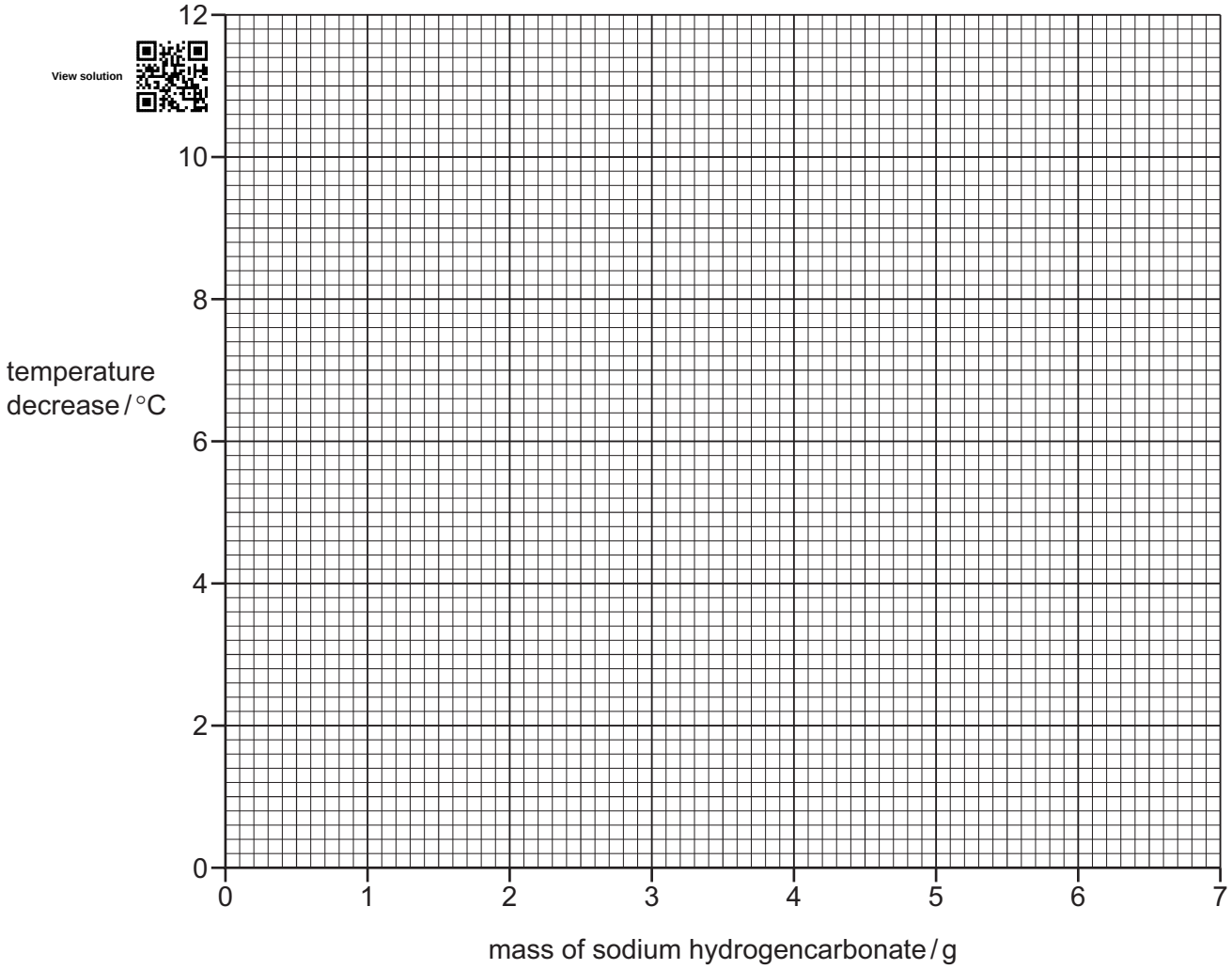

[4]

(c) (i) **From your graph**, determine the temperature decrease and mass of sodium hydrogencarbonate where your two straight lines meet. Include appropriate units in your answer.

View solution

Show clearly **on the grid** how you worked out your answer.

temperature decrease = ...

mass of sodium hydrogencarbonate = ...

[3]

(ii) Explain why the temperature decrease becomes constant for high masses of sodium hydrogencarbonate.

.....

..... [1]

(d) The investigation was repeated with dilute hydrochloric acid of half the concentration, but the same volume.

Sketch **on the grid** the graph you would expect to obtain.

Label your line **D**. [2]

(e) Suggest **two** changes that could be made to the apparatus that would improve the accuracy of the results. For each change explain why it would improve the accuracy of the results.

change 1 .....

explanation 1 .....

.....

change 2 .....

explanation 2 .....

.....

[4]

[Total: 18]

View solution

View solution

3 Solid **E** and solution **F** were analysed.
Tests were done on each substance.

tests on solid E

tests	observations
test 1 About half of solid **E** was placed in a test-tube and heated gently.	steam was given off; condensation appeared near the mouth of the test-tube
The remaining solid **E** was dissolved in distilled water to produce solution **E**. The solution was divided into four equal portions in three test-tubes and a boiling tube. **test 2** About 1 cm^3 of dilute nitric acid followed by a few drops of aqueous silver nitrate were added to the first portion of solution **E**.	no visible change
test 3 About 1 cm^3 of dilute nitric acid followed by a few drops of aqueous barium nitrate were added to the second portion of solution **E**.	white precipitate
test 4 Excess aqueous ammonia was added to the third portion of solution **E**.	white precipitate
test 5 Aqueous sodium hydroxide was added dropwise and then in excess to the fourth portion of solution **E** in the boiling tube.	white precipitate which dissolved in excess to form a colourless solution
test 6 The product from **test 5** was warmed gently and any gas given off was tested with damp red litmus paper.	the red litmus paper turned blue

(a) State the conclusion that can be made from the observations in **test 1**.

View solution

.....

..... [1]

(b) State the conclusion that can be made from the observation in **test 2**.

View solution

.....

..... [1]

(c) Identify the **three** ions in solid **E**.

.....

..... [3]

View solution

tests on solution F

Solution **F** was aqueous sodium hydroxide.

Complete the expected observations.

View solution

(d) A flame test was carried out on solution **F**.

observations ..... [1]

(e) The remaining solution **F** was divided into two approximately equal portions in two test-tubes.

(i) To the first portion of solution **F** a few drops of universal indicator solution were added.

observations ..... [1]

(ii) To the second portion of solution **F** approximately 2 cm^3 of aqueous copper(II) sulfate was added.

observations ..... [1]

[Total: 8]

View solution

4 Dilute hydrochloric acid reacts with calcium carbonate to make carbon dioxide gas. The apparatus shown in the diagram can be used to follow the progress of the reaction. The carbon dioxide gas leaves the flask causing the mass shown on the balance to decrease.

View solution

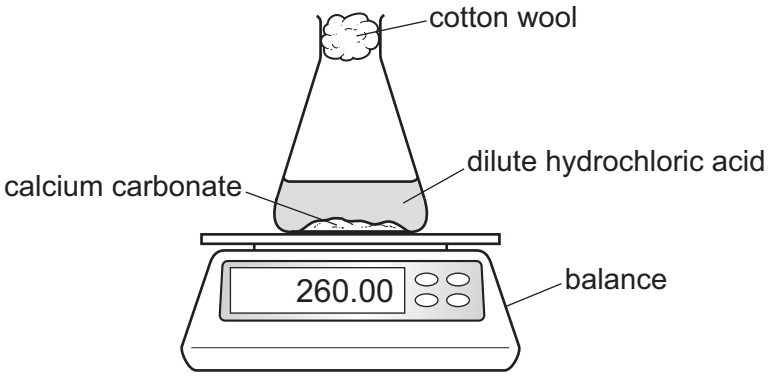

Plan an investigation, using the apparatus shown in the diagram, to find out how the temperature of the dilute hydrochloric acid affects the rate of the reaction. Your plan should include how your results will show how the temperature of the dilute hydrochloric acid affects the rate of the reaction.

You are provided with dilute hydrochloric acid, calcium carbonate and common laboratory apparatus.

.....

.....

.....

.....

.....

.....

.....

.....

.....

.....

.....

.....

.....

.....

..... [6]

BLANK PAGE

Permission to reproduce items where third-party owned material protected by copyright is included has been sought and cleared where possible. Every reasonable effort has been made by the publisher (UCLES) to trace copyright holders, but if any items requiring clearance have unwittingly been included, the publisher will be pleased to make amends at the earliest possible opportunity.

To avoid the issue of disclosure of answer-related information to candidates, all copyright acknowledgements are reproduced online in the Cambridge Assessment International Education Copyright Acknowledgements Booklet. This is produced for each series of examinations and is freely available to download at www.cambridgeinternational.org after the live examination series.

Cambridge Assessment International Education is part of the Cambridge Assessment Group. Cambridge Assessment is the brand name of the University of Cambridge Local Examinations Syndicate (UCLES), which itself is a department of the University of Cambridge.