Cambridge Assessment International Education

Cambridge IGCSE™

CHEMISTRY **0620/21**

Paper 2 Multiple Choice (Extended) **May/June 2022**

45 minutes

You must answer on the multiple choice answer sheet.

You will need: Multiple choice answer sheet
Soft clean eraser
Soft pencil (type B or HB is recommended)

INSTRUCTIONS

- There are **forty** questions on this paper. Answer **all** questions.
- For each question there are four possible answers **A**, **B**, **C** and **D**. Choose the **one** you consider correct and record your choice in soft pencil on the multiple choice answer sheet.
- Follow the instructions on the multiple choice answer sheet.
- Write in soft pencil.
- Write your name, centre number and candidate number on the multiple choice answer sheet in the spaces provided unless this has been done for you.
- Do **not** use correction fluid.
- Do **not** write on any bar codes.
- You may use a calculator.

INFORMATION

- The total mark for this paper is 40.
- Each correct answer will score one mark.
- Any rough working should be done on this question paper.
- The Periodic Table is printed in the question paper.

IB22 06_0620_21/RP
© UCLES 2022

1 Which two gases will diffuse at the same rate, at the same temperature?

View solution

A carbon monoxide and carbon dioxide

B carbon monoxide and nitrogen

C chlorine and fluorine

D nitrogen and oxygen

2 A student measures the time taken for 2.0 g of magnesium to dissolve in 50 cm^3 of dilute sulfuric acid.

View solution

Which apparatus is essential to complete the experiment?

1 stop-clock

2 measuring cylinder

3 thermometer

4 balance

A 1, 2 and 4 **B** 1 and 2 only **C** 1 and 4 only **D** 2, 3 and 4

3 The numbers of protons and neutrons and the electronic structures of four particles, W, X, Y and Z, are shown.

View solution

	number of protons	number of neutrons	electronic structure
W	8	8	2,8
X	8	10	2,6
Y	8	8	2,6
Z	10	8	2,8

Which particles have the same chemical properties?

A W and Y **B** W and Z **C** X and Y **D** X and Z

4 Which substance should be pure for the intended use?

View solution

A a drug for curing disease

B limestone for iron extraction

C petroleum for fractional distillation

D water for washing a car

© UCLES 2022

5 Metals and ionic compounds have similarities and differences in their structure and properties.

View solution

Which row about metals and ionic compounds is correct?

	similarity	difference
A	both contain positive ions	only ionic compounds contain anions
B	both contain positive ions	ionic compounds conduct using a 'sea of electrons'
C	both are malleable	only ionic compounds contain anions
D	both are malleable	ionic compounds conduct using a 'sea of electrons'

6 Which diagram represents the outer-shell electron arrangement in a nitrogen molecule?

View solution

A



B



C



D



7 The equation for the reaction between barium chloride and dilute sulfuric acid is shown.

View solution

$$BaCl_2 + H_2SO_4 \rightarrow BaSO_4 + 2HCl$$

Which row shows the state symbols for this equation?

	$BaCl_2$	H_2SO_4	$BaSO_4$	$2HCl$
A	(aq)	(aq)	(s)	(aq)
B	(aq)	(l)	(s)	(aq)
C	(l)	(aq)	(s)	(l)
D	(aq)	(l)	(aq)	(l)

8 The relative atomic mass, A_r, of an element is determined by comparing the mass of one atom of the element with the mass of one atom of element Q.

View solution

What is Q?

A carbon

B chlorine

C hydrogen

D oxygen

© UCLES 2022

9 The equation for the reaction between aqueous lead(II) nitrate and aqueous sodium chloride is shown.

View solution

$$Pb(NO_3)_2(aq) + 2NaCl(aq) \rightarrow PbCl_2(s) + 2NaNO_3(aq)$$

If 100 cm^3 of aqueous lead(II) nitrate of concentration 0.1 mol/dm^3 is reacted with an excess of aqueous sodium chloride, which mass of lead(II) chloride is obtained?

A 1.16 g **B** 2.42 g **C** 2.78 g **D** 3.31 g

10 The diagram shows the electrolysis of concentrated hydrochloric acid and concentrated aqueous sodium chloride using carbon electrodes.

View solution

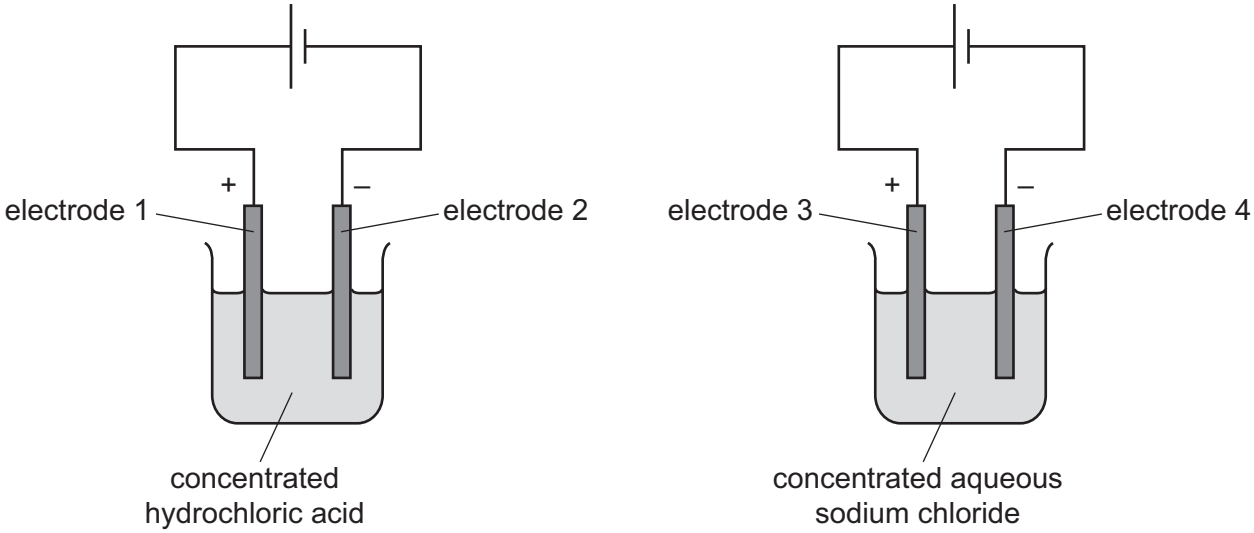

At which electrodes is hydrogen produced?

A electrode 1 only

B electrodes 1 and 3

C electrode 2 only

D electrodes 2 and 4

11 Aqueous copper(II) sulfate is electrolysed using copper electrodes.

View solution

What is the ionic half-equation for the reaction at the cathode?

A $Cu \rightarrow Cu^{2+} + 2e^-$

B $Cu^{2+} + 2e^- \rightarrow Cu$

C $2H^+ + 2e^- \rightarrow H_2$

D $2O^{2-} \rightarrow O_2 + 4e^-$

© UCLES 2022

12 Which row identifies a chemical change and a physical change?

View solution

	chemical change	physical change
A	boiling ethanol	burning ethanol
B	burning ethanol	evaporating ethanol
C	dissolving ethanol in water	burning ethanol
D	evaporating ethanol	dissolving ethanol in water

13 The equation for the reaction between gaseous hydrogen and gaseous iodine to form gaseous hydrogen iodide is shown.

View solution

$$H_2(g) + I_2(g) \rightarrow 2HI(g)$$

The reaction is exothermic.

Which statement explains why the reaction is exothermic?

A Energy is released when H–H and I–I bonds are broken.

B The bond energies of the reactants are larger than the bond energies of the products.

C The products are at a higher energy level than the reactants.

D More energy is released when two HI bonds are formed than is used when the H–H and I–I bonds are broken.

14 Acidified aqueous silver nitrate is added to a test-tube containing aqueous chloride ions.

View solution

The test-tube is then left in direct sunlight.

Which row describes the observations and explains what happens to the reaction mixture?

	observation on adding aqueous silver nitrate	observation after leaving in sunlight	explanation
A	yellow precipitate	precipitate dissolves	silver chloride forms
B	yellow precipitate	precipitate turns grey	silver ions are reduced
C	white precipitate	precipitate dissolves	silver chloride forms
D	white precipitate	precipitate turns grey	silver ions are reduced

© UCLES 2022

15 Water is added to anhydrous copper(II) sulfate.

View solution

What happens during the reaction?

A The copper(II) sulfate turns blue and the solution formed gets colder.

B The copper(II) sulfate turns blue and the solution formed gets hotter.

C The copper(II) sulfate turns white and the solution formed gets colder.

D The copper(II) sulfate turns white and the solution formed gets hotter.

16 Aqueous iron(III) chloride, $FeCl_3$, reacts with aqueous potassium iodide, KI.

View solution

$$v FeCl_3 + wKI \rightarrow xFeCl_2 + yKCl + I_2$$

Which statements are correct?

1 In the balanced equation, *v*, *w*, *x* and *y* have the same value.

2 Potassium iodide is an oxidising agent.

3 A dark brown solution is produced in the reaction.

A 1 and 2 **B** 1 and 3 **C** 2 only **D** 2 and 3

17 Which statement about acids is correct?

View solution

A A strong acid has a higher pH than a weak acid of the same concentration.

B A strong acid is a proton acceptor.

C A weak acid is a proton donor.

D A weak acid is fully ionised in aqueous solution.

© UCLES 2022

18 The oxides of two elements, X and Y, are separately dissolved in water and the pH of each solution tested.

View solution

oxide tested	pH of solution
X	1
Y	13

Which information about X and Y is correct?

	oxide is acidic	oxide is basic	metal	non-metal
A	X	Y	X	Y
B	X	Y	Y	X
C	Y	X	X	Y
D	Y	X	Y	X

19 An acid is neutralised by adding an excess of an insoluble solid base.

View solution

A soluble salt is formed.

How is the pure salt obtained from the reaction mixture?

A crystallisation → evaporation → filtration

B evaporation → crystallisation → filtration

C filtration → crystallisation → evaporation

D filtration → evaporation → crystallisation

20 The electronic structure of element Z is 2,8,1.

View solution

Which statements about Z are correct?

1 It is a metal.

2 It has two outer-shell electrons.

3 It is in Period 3.

A 1, 2 and 3 **B** 1 and 2 only **C** 1 and 3 only **D** 2 only

© UCLES 2022

21 Elements in Group IV of the Periodic Table are shown.

View solution

carbon

silicon

germanium

tin

lead

What does **not** occur in Group IV as it is descended?

A The proton number of the elements increases.

B The elements become more metallic.

C The elements have more electrons in their outer shell.

D The elements have more electron shells.

22 Element M forms both M^+ and M^{2+} ions.

View solution

In which part of the Periodic Table is M placed?

A Group I

B Group II

C Group III

D transition elements

23 In the extraction of aluminium by electrolysis, cryolite is added to the bauxite ore.

View solution

Which row describes the role of cryolite and gives the ionic half-equation at the cathode?

	role of cryolite	ionic half-equation at the cathode
A	catalyst	$Al^{3+} + 3e^- \rightarrow Al$
B	catalyst	$Al^{3+} + 3e^- \rightarrow 3Al$
C	lowers melting point of electrolyte	$Al^{3+} + 3e^- \rightarrow Al$
D	lowers melting point of electrolyte	$Al^{3+} + 3e^- \rightarrow 3Al$

© UCLES 2022

24 Mild steel is galvanised to prevent corrosion of the iron.

View solution

Which statements about galvanising are correct?

1 Galvanising prevents corrosion because the zinc forms an alloy.

2 If the coating is damaged, water and oxygen do not corrode the iron.

3 Zinc is a sacrificial metal and corrodes in preference to iron.

A 1 and 2 **B** 1 and 3 **C** 2 only **D** 2 and 3

25 Which diagram represents the arrangement of the outer-shell electrons of a noble gas?

View solution

A **B** **C** **D**

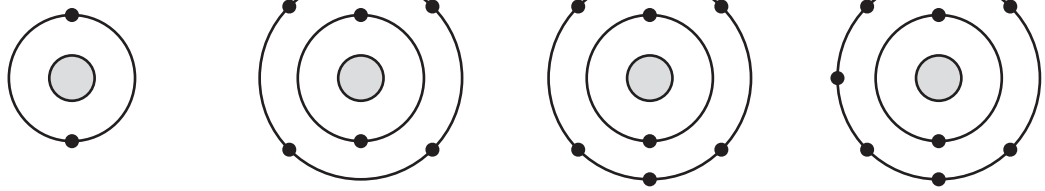

26 Which statements about the general properties of metals are correct?

View solution

1 They are good conductors of heat and electricity.

2 They have low melting points.

3 They react with dilute acids to form a salt and water.

4 They react with oxygen to form basic oxides.

A 1 and 2 **B** 1 and 4 **C** 2 and 3 **D** 3 and 4

27 Reactions of three metals and their oxides are shown.

View solution

metal	add dilute hydrochloric acid to metal	heat metal oxide with carbon
1	✓	✓
2	✓	✗
3	✗	✓

key

✓ = reacts

✗ = does not react

What is the order of reactivity of these metals, from most reactive to least reactive?

A $1 \rightarrow 2 \rightarrow 3$ **B** $1 \rightarrow 3 \rightarrow 2$ **C** $2 \rightarrow 1 \rightarrow 3$ **D** $2 \rightarrow 3 \rightarrow 1$

© UCLES 2022

28 Three metal compounds, J, K and L, are heated using a Bunsen burner.

View solution

The results are shown.

J colourless gas produced, which relights a glowing splint

K colourless gas produced, which turns limewater milky

L no reaction

Which row identifies J, K and L?

	J	K	L
A	magnesium carbonate	potassium carbonate	potassium nitrate
B	magnesium carbonate	potassium nitrate	potassium carbonate
C	potassium nitrate	magnesium carbonate	potassium carbonate
D	potassium nitrate	potassium carbonate	magnesium carbonate

29 The diagram shows the uses and treatment processes of muddy river water.

View solution

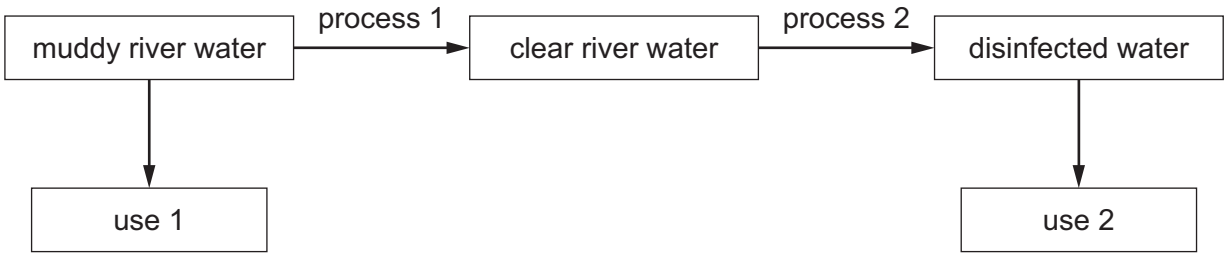

Which row identifies uses 1 and 2 and processes 1 and 2?

	use 1	use 2	process 1	process 2
A	drinking	watering crops	chlorination	filtration
B	drinking	watering crops	filtration	chlorination
C	watering crops	drinking	chlorination	filtration
D	watering crops	drinking	filtration	chlorination

© UCLES 2022

30 The equation for the manufacture of ammonia in the Haber process is shown.

View solution

$$3H_2(g) + N_2(g) \rightleftharpoons 2NH_3(g)$$

The forward reaction is exothermic.

Which row describes the effect of the stated change on the reaction rate and the yield of ammonia?

	change	effect on reaction rate	effect on yield of ammonia
A	decrease pressure	increases	decreases
B	decrease temperature	decreases	increases
C	increase pressure	increases	decreases
D	increase temperature	increases	increases

31 Fertilisers are used to provide three of the elements needed for plant growth.

View solution

Which two compounds would give a fertiliser containing all three of these elements?

A $Ca(NO_3)_2$ and $(NH_4)_2SO_4$

B $Ca(NO_3)_2$ and $(NH_4)_3PO_4$

C KNO_3 and $(NH_4)_2SO_4$

D KNO_3 and $(NH_4)_3PO_4$

32 The flow chart shows part of the process for the manufacture of sulfuric acid and its electrolysis.

View solution

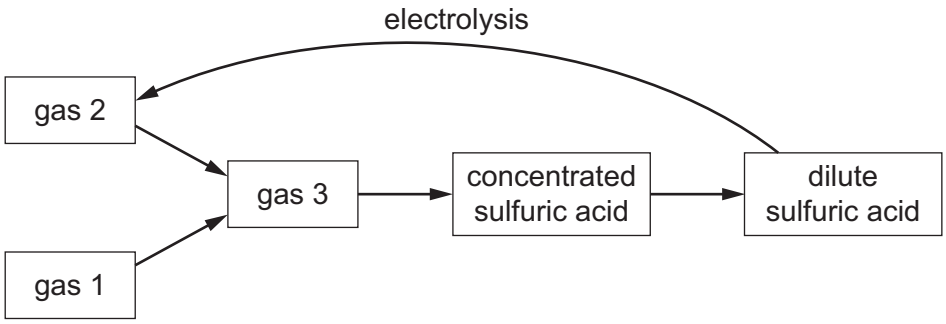

What are gases 1, 2 and 3?

	gas 1	gas 2	gas 3
A	sulfur dioxide	hydrogen	sulfur trioxide
B	sulfur dioxide	oxygen	sulfur trioxide
C	sulfur trioxide	hydrogen	sulfur dioxide
D	sulfur trioxide	oxygen	sulfur dioxide

© UCLES 2022

33 Which statements about sulfur dioxide are correct?

View solution

1 Sulfur dioxide decolourises acidified potassium manganate(VII).

2 Sulfur dioxide forms when acids react with carbonates.

3 Sulfur dioxide is used as a bleach.

4 Sulfur dioxide is used to treat acidic soil.

A 1 and 3 **B** 1 and 4 **C** 2 and 3 **D** 2 and 4

34 What are the products when limestone (calcium carbonate) is heated strongly?

View solution

A calcium hydroxide and carbon dioxide

B calcium hydroxide and carbon monoxide

C calcium oxide and carbon dioxide

D calcium oxide and carbon monoxide

35 The structure of ester W is shown.

View solution

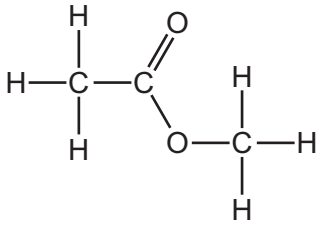

Which row gives the names of ester W and the carboxylic acid and alcohol from which it is made?

	name of ester W	carboxylic acid	alcohol
A	ethyl methanoate	ethanoic acid	methanol
B	ethyl methanoate	methanoic acid	ethanol
C	methyl ethanoate	ethanoic acid	methanol
D	methyl ethanoate	methanoic acid	ethanol

36 Ethanol is made industrially by the fermentation of glucose or by the catalytic addition of steam to ethene.

Which statement describes an advantage of fermentation compared to catalytic addition?

View solution

A Ethanol is the only product of fermentation.

B Fermentation uses a batch process but catalytic addition is continuous.

C Fermentation uses a higher temperature than catalytic addition.

D Fermentation uses a renewable resource.

© UCLES 2022

37 Some properties of colourless liquid L are listed.

View solution

- It boils at 65 °C.
- When added to water, two layers form which do not mix.
- It does not react with sodium carbonate.
- It has no effect on bromine water.

What is L?

A ethanol

B hexane

C hexene

D ethanoic acid

38 A molecule of compound P contains two carbon atoms and four hydrogen atoms.

View solution

Which row represents P?

	name of compound	M_r	reacts with aqueous bromine
A	ethane	30	✗
B	ethene	16	✓
C	ethene	28	✓
D	ethene	28	✗

39 The reaction of ethanol with acidified potassium manganate(VII) is shown.

View solution

$$CH_3CH_2OH \xrightarrow[H^+]{KMnO_4} CH_3COOH$$

Which type of reaction is taking place?

A addition

B condensation

C hydrolysis

D oxidation

40 Which polymer is a synthetic polyamide?

View solution

A nylon

B poly(ethene)

C protein

D *Terylene*

BLANK PAGE

Permission to reproduce items where third-party owned material protected by copyright is included has been sought and cleared where possible. Every reasonable effort has been made by the publisher (UCLES) to trace copyright holders, but if any items requiring clearance have unwittingly been included, the publisher will be pleased to make amends at the earliest possible opportunity.

To avoid the issue of disclosure of answer-related information to candidates, all copyright acknowledgements are reproduced online in the Cambridge Assessment International Education Copyright Acknowledgements Booklet. This is produced for each series of examinations and is freely available to download at www.cambridgeinternational.org after the live examination series.

Cambridge Assessment International Education is part of Cambridge Assessment. Cambridge Assessment is the brand name of the University of Cambridge Local Examinations Syndicate (UCLES), which is a department of the University of Cambridge.

© UCLES 2022

© UCLES 2022

The Periodic Table of Elements

Group																	
I	II											III	IV	V	VI	VII	VIII
							1 H hydrogen 1										2 He helium 4
3 Li lithium 7	4 Be beryllium 9											5 B boron 11	6 C carbon 12	7 N nitrogen 14	8 O oxygen 16	9 F fluorine 19	10 Ne neon 20
11 Na sodium 23	12 Mg magnesium 24											13 Al aluminium 27	14 Si silicon 28	15 P phosphorus 31	16 S sulfur 32	17 Cl chlorine 35.5	18 Ar argon 40
19 K potassium 39	20 Ca calcium 40	21 Sc scandium 45	22 Ti titanium 48	23 V vanadium 51	24 Cr chromium 52	25 Mn manganese 55	26 Fe iron 56	27 Co cobalt 59	28 Ni nickel 59	29 Cu copper 64	30 Zn zinc 65	31 Ga gallium 70	32 Ge germanium 73	33 As arsenic 75	34 Se selenium 79	35 Br bromine 80	36 Kr krypton 84
37 Rb rubidium 85	38 Sr strontium 88	39 Y yttrium 89	40 Zr zirconium 91	41 Nb niobium 93	42 Mo molybdenum 96	43 Tc technetium –	44 Ru ruthenium 101	45 Rh rhodium 103	46 Pd palladium 106	47 Ag silver 108	48 Cd cadmium 112	49 In indium 115	50 Sn tin 119	51 Sb antimony 122	52 Te tellurium 128	53 I iodine 127	54 Xe xenon 131
55 Cs caesium 133	56 Ba barium 137	57–71 lanthanoids	72 Hf hafnium 178	73 Ta tantalum 181	74 W tungsten 184	75 Re rhenium 186	76 Os osmium 190	77 Ir iridium 192	78 Pt platinum 195	79 Au gold 197	80 Hg mercury 201	81 Tl thallium 204	82 Pb lead 207	83 Bi bismuth 209	84 Po polonium –	85 At astatine –	86 Rn radon –
87 Fr francium –	88 Ra radium –	89–103 actinoids	104 Rf rutherfordium –	105 Db dubnium –	106 Sg seaborgium –	107 Bh bohrium –	108 Hs hassium –	109 Mt meitnerium –	110 Ds darmstadtium –	111 Rg roentgenium –	112 Cn copernicium –		114 Fl flerovium –		116 Lv livermorium –		

Key

atomic number
atomic symbol
name
relative atomic mass

lanthanoids	57 La lanthanum 139	58 Ce cerium 140	59 Pr praseodymium 141	60 Nd neodymium 144	61 Pm promethium –	62 Sm samarium 150	63 Eu europium 152	64 Gd gadolinium 157	65 Tb terbium 159	66 Dy dysprosium 163	67 Ho holmium 165	68 Er erbium 167	69 Tm thulium 169	70 Yb ytterbium 173	71 Lu lutetium 175
actinoids	89 Ac actinium –	90 Th thorium 232	91 Pa protactinium 231	92 U uranium 238	93 Np neptunium –	94 Pu plutonium –	95 Am americium –	96 Cm curium –	97 Bk berkelium –	98 Cf californium –	99 Es einsteinium –	100 Fm fermium –	101 Md mendelevium –	102 No nobelium –	103 Lr lawrencium –

The volume of one mole of any gas is 24 dm^3 at room temperature and pressure (r.t.p.).