Cambridge Assessment International Education

Cambridge IGCSE™

CHEMISTRY **0620/23**

Paper 2 Multiple Choice (Extended) **May/June 2022**

45 minutes

You must answer on the multiple choice answer sheet.

You will need: Multiple choice answer sheet
Soft clean eraser
Soft pencil (type B or HB is recommended)

INSTRUCTIONS

- There are **forty** questions on this paper. Answer **all** questions.
- For each question there are four possible answers **A**, **B**, **C** and **D**. Choose the **one** you consider correct and record your choice in soft pencil on the multiple choice answer sheet.
- Follow the instructions on the multiple choice answer sheet.
- Write in soft pencil.
- Write your name, centre number and candidate number on the multiple choice answer sheet in the spaces provided unless this has been done for you.
- Do **not** use correction fluid.
- Do **not** write on any bar codes.
- You may use a calculator.

INFORMATION

- The total mark for this paper is 40.
- Each correct answer will score one mark.
- Any rough working should be done on this question paper.
- The Periodic Table is printed in the question paper.

IB22 06_0620_23/RP
© UCLES 2022

1 Which two gases will diffuse at the same rate, at the same temperature?

View solution

A carbon monoxide and carbon dioxide

B carbon monoxide and nitrogen

C chlorine and fluorine

D nitrogen and oxygen

2 A student measures the time taken for 2.0 g of magnesium to dissolve in 50 cm^3 of dilute sulfuric acid.

View solution

Which apparatus is essential to complete the experiment?

1 stop-clock

2 measuring cylinder

3 thermometer

4 balance

A 1, 2 and 4 **B** 1 and 2 only **C** 1 and 4 only **D** 2, 3 and 4

3 Which statement describes the properties of both diamond and silicon(IV) oxide?

View solution

A They are brittle, with a low melting point, and are insoluble in water.

B They are hard, with a high melting point, and are electrical insulators.

C They are malleable, with a high melting point, and are electrical conductors.

D They are soft, with a low melting point, and are electrical insulators.

© UCLES 2022

4 Paper chromatography is used to separate four different coloured inks, W, X, Y and Z, and an unknown ink T.

View solution

The chromatogram is shown.

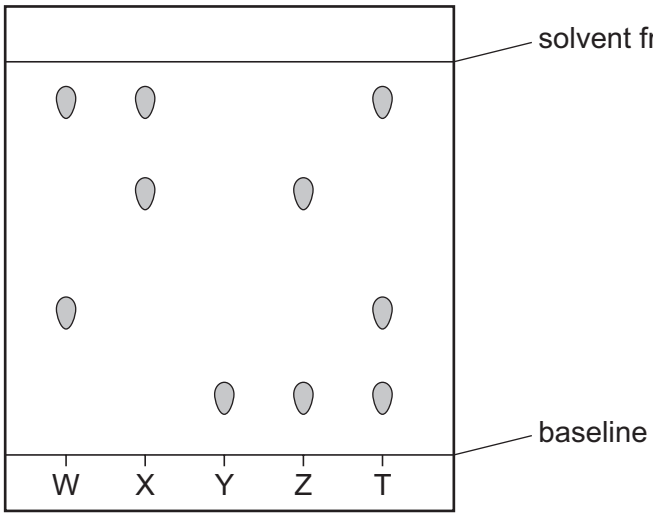

Which inks are present in ink T?

A W and X **B** W and Y **C** X and Z **D** Y and Z

5 Particle P has an atomic number of 18, a mass number of 40 and no overall charge.

View solution

Particle Q has an atomic number of 19, a mass number of 40 and a single positive charge.

Which statement is correct?

A They are isotopes of the same element.

B They are both ions.

C Q has more neutrons than P.

D They have the same number of electrons in their outer shell.

6 Which statement about the properties of metals is correct?

View solution

A Metals are malleable because the layers of positive ions can slide over each other.

B Metals conduct electricity when solid because the positive ions move freely through the metal.

C Metals conduct electricity because there is a strong force of attraction between the positive ions and the delocalised electrons.

D Metals have a high melting point because the positive ions attract each other strongly.

© UCLES 2022

7 The equation for the reaction between barium chloride and dilute sulfuric acid is shown.

View solution

$$BaCl_2 + H_2SO_4 \rightarrow BaSO_4 + 2HCl$$

Which row shows the state symbols for this equation?

	$BaCl_2$	H_2SO_4	$BaSO_4$	$2HCl$
A	(aq)	(aq)	(s)	(aq)
B	(aq)	(l)	(s)	(aq)
C	(l)	(aq)	(s)	(l)
D	(aq)	(l)	(aq)	(l)

8 A 0.5 g sample of calcium carbonate is reacted with excess dilute hydrochloric acid.

View solution

$$CaCO_3(s) + 2HCl(aq) \rightarrow CaCl_2(aq) + H_2O(l) + CO_2(g)$$

Which volume of CO_2 is produced at r.t.p.?

A $0.12\,dm^3$ **B** $0.18\,dm^3$ **C** $0.24\,dm^3$ **D** $12\,dm^3$

9 Aluminium is manufactured from aluminium oxide by electrolysis.

View solution

Which row shows the ionic half-equations at each electrode and describes the role of cryolite in the process?

	reaction at anode	reaction at cathode	role of cryolite
A	$2O^{2-} \rightarrow O_2 + 4e^-$	$Al^{3+} + 3e^- \rightarrow 3Al$	catalyst
B	$Al^{3+} + 3e^- \rightarrow Al$	$2O^{2-} \rightarrow O_2 + 4e^-$	solvent for aluminium oxide
C	$2O^{2-} \rightarrow O_2 + 4e^-$	$Al^{3+} + 3e^- \rightarrow Al$	solvent for aluminium oxide
D	$Al^{3+} + 3e^- \rightarrow 3Al$	$2O^{2-} \rightarrow O_2 + 4e^-$	catalyst

© UCLES 2022

10 The diagram shows the electrolysis of concentrated hydrochloric acid and concentrated aqueous sodium chloride using carbon electrodes.

View solution

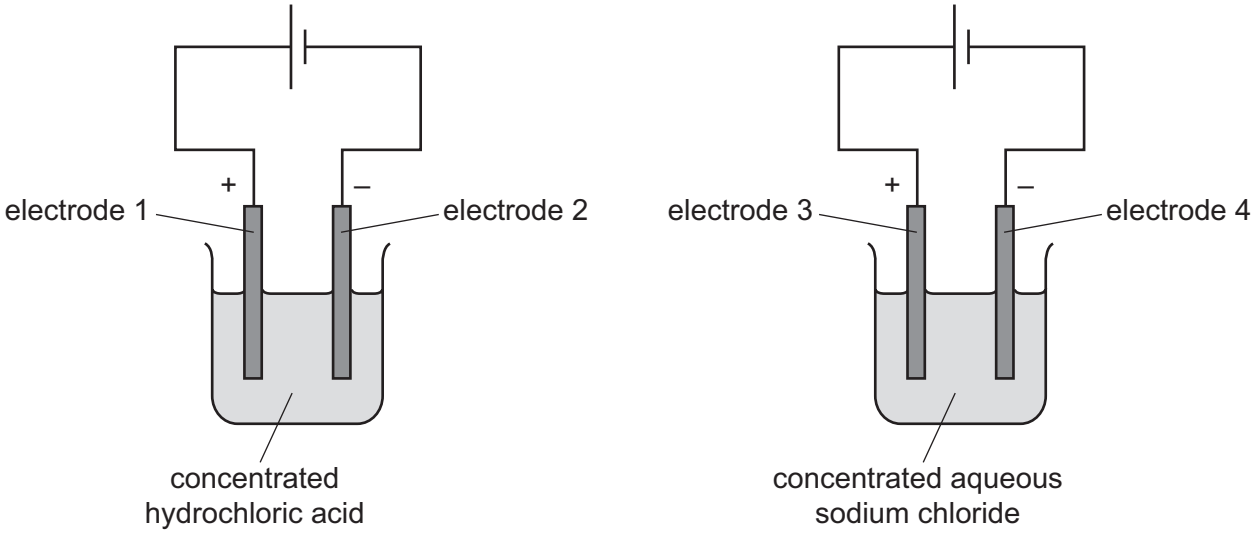

At which electrodes is hydrogen produced?

A electrode 1 only

B electrodes 1 and 3

C electrode 2 only

D electrodes 2 and 4

11 Which statement about fuels is correct?

View solution

A Coal and ethanol are examples of non-renewable energy sources.

B Hydrogen and oxygen can be reacted to produce an electric current.

C Large amounts of energy are taken in by a fuel when it burns.

D Radioactive isotopes are burned to produce heat.

12 Which row identifies a chemical change and a physical change?

View solution

	chemical change	physical change
A	boiling ethanol	burning ethanol
B	burning ethanol	evaporating ethanol
C	dissolving ethanol in water	burning ethanol
D	evaporating ethanol	dissolving ethanol in water

© UCLES 2022

13 Metal M reacts with steam and produces gas G.

View solution

Which row identifies gas G and the type of reaction when metal M reacts with steam?

	gas G	type of reaction
A	hydrogen	redox
B	hydrogen	neutralisation
C	oxygen	redox
D	oxygen	neutralisation

14 Which statement explains why increasing the concentration of a reactant increases the rate of the reaction?

A A greater proportion of the particles have the activation energy so there are more successful collisions.

View solution

B Particles have more energy so there are more frequent collisions.

C There are more particles in the same volume so there are more frequent collisions.

D The particles move more quickly so there are more frequent collisions.

15 Water is added to anhydrous copper(II) sulfate.

View solution

What happens during the reaction?

A The copper(II) sulfate turns blue and the solution formed gets colder.

B The copper(II) sulfate turns blue and the solution formed gets hotter.

C The copper(II) sulfate turns white and the solution formed gets colder.

D The copper(II) sulfate turns white and the solution formed gets hotter.

16 Which statement explains why lime is added to soil?

View solution

A to decrease the pH of acidic soil

B to decrease the pH of alkaline soil

C to increase the pH of acidic soil

D to increase the pH of alkaline soil

© UCLES 2022

17 Sulfur dioxide is bubbled through water containing litmus.

View solution

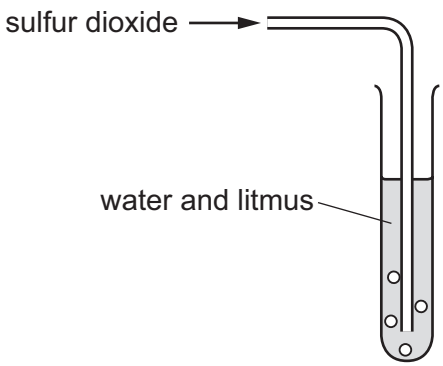

Which row describes and explains what happens to the litmus?

	observation	explanation
A	it turns blue	sulfur dioxide is a basic oxide
B	it turns blue	sulfur dioxide is an acidic oxide
C	it turns red	sulfur dioxide is an acidic oxide
D	it turns red	sulfur dioxide is a basic oxide

18 The oxides of two elements, X and Y, are separately dissolved in water and the pH of each solution tested.

View solution

oxide tested	pH of solution
X	1
Y	13

Which information about X and Y is correct?

	oxide is acidic	oxide is basic	metal	non-metal
A	X	Y	X	Y
B	X	Y	Y	X
C	Y	X	X	Y
D	Y	X	Y	X

© UCLES 2022

19 An acid is neutralised by adding an excess of an insoluble solid base.

View solution

A soluble salt is formed.

How is the pure salt obtained from the reaction mixture?

A crystallisation → evaporation → filtration

B evaporation → crystallisation → filtration

C filtration → crystallisation → evaporation

D filtration → evaporation → crystallisation

20 Which ion forms a precipitate that dissolves in excess with both aqueous ammonia and with aqueous sodium hydroxide?

View solution

A calcium ion, Ca^{2+}

B copper(II) ion, Cu^{2+}

C iron(III) ion, Fe^{3+}

D zinc ion, Zn^{2+}

21 Elements in Group IV of the Periodic Table are shown.

View solution

carbon

silicon

germanium

tin

lead

What does **not** occur in Group IV as it is descended?

A The proton number of the elements increases.

B The elements become more metallic.

C The elements have more electrons in their outer shell.

D The elements have more electron shells.

© UCLES 2022

22 W, X, Y and Z are elements in Period 3 of the Periodic Table.

View solution

The numbers of outer-shell electrons in an atom of each element are shown.

element	number of outer-shell electrons
W	1
X	2
Y	7
Z	8

Which elements are non-metals?

A W, X and Y **B** W and X only **C** Y and Z **D** Z only

23 Selenium is an element in Group VI.

View solution

Group VI elements follow similar trends to Group VII elements.

Which statement about selenium is correct?

A It has a higher density than sulfur.

B It has a lower melting point than sulfur.

C It has six electron shells.

D It is a monoatomic element.

24 Which row describes the properties of a typical transition element?

View solution

	melting point	density	used as catalyst
A	high	high	yes
B	high	low	no
C	low	high	yes
D	low	low	no

© UCLES 2022

25 Which row describes an atom of a noble gas?

View solution

	number of protons	number of neutrons	number of electrons
A	2	2	0
B	2	2	2
C	8	8	8
D	8	8	10

26 Some properties of four elements, P, Q, R and S, are shown.

View solution

Solid P reacts with dilute hydrochloric acid to give hydrogen.

Solid Q does not conduct electricity.

Solid R is used to make saucepans because it is a good conductor of heat.

Solid S reacts with oxygen to form a compound where atoms of S share electrons with atoms of oxygen.

Which elements are metals?

A P and R **B** P and S **C** Q and R **D** Q and S

27 Which substance is used to reduce zinc oxide in the manufacture of zinc?

View solution

A carbon

B carbon dioxide

C hydrogen

D sulfur dioxide

© UCLES 2022

28 Three metal compounds, J, K and L, are heated using a Bunsen burner.

View solution

The results are shown.

J colourless gas produced, which relights a glowing splint

K colourless gas produced, which turns limewater milky

L no reaction

Which row identifies J, K and L?

	J	K	L
A	magnesium carbonate	potassium carbonate	potassium nitrate
B	magnesium carbonate	potassium nitrate	potassium carbonate
C	potassium nitrate	magnesium carbonate	potassium carbonate
D	potassium nitrate	potassium carbonate	magnesium carbonate

29 Nitrogen oxide, NO, is formed in the engine of petrol-powered cars.

View solution

One constituent of petrol is octane, C_8H_{18}.

Nitrogen oxide is removed from exhaust fumes by catalytic converters.

Which row identifies the reactants that produce nitrogen oxide and a reaction that removes it in a catalytic converter?

	reactants that produce NO	reaction that removes NO
A	octane + one gas found in air	$2NO + 2CO \rightarrow N_2 + 2CO_2$
B	octane + one gas found in air	$NO + CO_2 \rightarrow NO_2 + CO$
C	two gases found in air	$2NO + 2CO \rightarrow N_2 + 2CO_2$
D	two gases found in air	$NO + CO_2 \rightarrow NO_2 + CO$

30 A magnesium block is attached to iron to prevent it from rusting.

View solution

Which statement about this method of rust prevention is correct?

A Magnesium corrodes instead of iron because it is more reactive.

B Magnesium prevents oxygen from reaching the iron.

C The iron does not rust because it has a greater tendency to form ions than magnesium.

D This method of rust prevention is called galvanising.

© UCLES 2022

31 Fertilisers are used to provide three of the elements needed for plant growth.

View solution

Which two compounds would give a fertiliser containing all three of these elements?

A $Ca(NO_3)_2$ and $(NH_4)_2SO_4$

B $Ca(NO_3)_2$ and $(NH_4)_3PO_4$

C KNO_3 and $(NH_4)_2SO_4$

D KNO_3 and $(NH_4)_3PO_4$

32 Which processes increase the amount of carbon dioxide in the air?

View solution

1 combustion of hydrogen

2 combustion of methane

3 photosynthesis by plants

4 thermal decomposition of limestone

A 1 and 3 **B** 1 and 4 **C** 2 and 3 **D** 2 and 4

33 In the Contact process, sulfur dioxide is converted into sulfur trioxide.

View solution

$$2SO_2(g) + O_2(g) \rightleftharpoons 2SO_3(g)$$

What is the effect of lowering the pressure on the rate of formation and percentage yield of sulfur trioxide at equilibrium?

	rate of formation	percentage yield
A	decreases	decreases
B	decreases	increases
C	increases	decreases
D	increases	increases

34 What are the products when limestone (calcium carbonate) is heated strongly?

View solution

A calcium hydroxide and carbon dioxide

B calcium hydroxide and carbon monoxide

C calcium oxide and carbon dioxide

D calcium oxide and carbon monoxide

© UCLES 2022

35 The structure of ester W is shown.

View solution

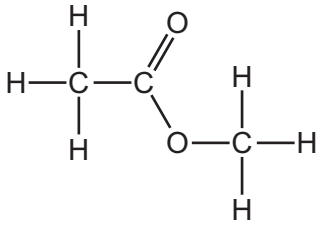

Which row gives the names of ester W and the carboxylic acid and alcohol from which it is made?

	name of ester W	carboxylic acid	alcohol
A	ethyl methanoate	ethanoic acid	methanol
B	ethyl methanoate	methanoic acid	ethanol
C	methyl ethanoate	ethanoic acid	methanol
D	methyl ethanoate	methanoic acid	ethanol

36 The equation for the reaction between butane, C_4H_{10}, and chlorine is shown.

View solution

$$C_4H_{10} + Cl_2 \rightarrow C_4H_9Cl + HCl$$

Which type of reaction does butane undergo when it reacts with chlorine?

A addition

B reduction

C acid–base

D substitution

37 Butene has three structural isomers which are alkenes.

View solution

Which statements about these isomers are correct?

1 They have the same molecular formula.

2 They have different numbers of bonds in the molecule.

3 They have a C=C bond in the structure.

A 1 and 2 **B** 1 and 3 **C** 2 only **D** 3 only

© UCLES 2022

38 The hydrocarbon $C_{12}H_{26}$ is cracked to give X and Y, as shown.

View solution

$$C_{12}H_{26} \rightarrow X + Y$$

Which statement is correct?

A If X is C_6H_{12} then Y will react with aqueous bromine.

B If X is $C_{10}H_{22}$ then Y can be used to make a polymer.

C If X is a hydrogen molecule then Y is an alkane.

D X and Y could be structural isomers.

39 An ester, $C_4H_8O_2$, is made by reacting 0.06 mol of ethanol, C_2H_6O, and 0.05 mol of ethanoic acid, $C_2H_4O_2$.

View solution

$$C_2H_6O + C_2H_4O_2 \rightarrow C_4H_8O_2 + H_2O$$

0.0375 mol of the ester was made.

What is the percentage yield and the M_r of the ester?

	percentage yield / %	M_r
A	62.5	48
B	75.0	48
C	62.5	88
D	75.0	88

40 Which type of compound is made when a protein is hydrolysed?

View solution

A alkene

B amino acid

C carboxylic acid

D sugar

© UCLES 2022

BLANK PAGE

Permission to reproduce items where third-party owned material protected by copyright is included has been sought and cleared where possible. Every reasonable effort has been made by the publisher (UCLES) to trace copyright holders, but if any items requiring clearance have unwittingly been included, the publisher will be pleased to make amends at the earliest possible opportunity.

To avoid the issue of disclosure of answer-related information to candidates, all copyright acknowledgements are reproduced online in the Cambridge Assessment International Education Copyright Acknowledgements Booklet. This is produced for each series of examinations and is freely available to download at www.cambridgeinternational.org after the live examination series.

Cambridge Assessment International Education is part of Cambridge Assessment. Cambridge Assessment is the brand name of the University of Cambridge Local Examinations Syndicate (UCLES), which is a department of the University of Cambridge.

© UCLES 2022

© UCLES 2022

The Periodic Table of Elements

Group																	
I	II											III	IV	V	VI	VII	VIII
							1 H hydrogen 1										2 He helium 4
3 Li lithium 7	4 Be beryllium 9											5 B boron 11	6 C carbon 12	7 N nitrogen 14	8 O oxygen 16	9 F fluorine 19	10 Ne neon 20
11 Na sodium 23	12 Mg magnesium 24											13 Al aluminium 27	14 Si silicon 28	15 P phosphorus 31	16 S sulfur 32	17 Cl chlorine 35.5	18 Ar argon 40
19 K potassium 39	20 Ca calcium 40	21 Sc scandium 45	22 Ti titanium 48	23 V vanadium 51	24 Cr chromium 52	25 Mn manganese 55	26 Fe iron 56	27 Co cobalt 59	28 Ni nickel 59	29 Cu copper 64	30 Zn zinc 65	31 Ga gallium 70	32 Ge germanium 73	33 As arsenic 75	34 Se selenium 79	35 Br bromine 80	36 Kr krypton 84
37 Rb rubidium 85	38 Sr strontium 88	39 Y yttrium 89	40 Zr zirconium 91	41 Nb niobium 93	42 Mo molybdenum 96	43 Tc technetium –	44 Ru ruthenium 101	45 Rh rhodium 103	46 Pd palladium 106	47 Ag silver 108	48 Cd cadmium 112	49 In indium 115	50 Sn tin 119	51 Sb antimony 122	52 Te tellurium 128	53 I iodine 127	54 Xe xenon 131
55 Cs caesium 133	56 Ba barium 137	57–71 lanthanoids	72 Hf hafnium 178	73 Ta tantalum 181	74 W tungsten 184	75 Re rhenium 186	76 Os osmium 190	77 Ir iridium 192	78 Pt platinum 195	79 Au gold 197	80 Hg mercury 201	81 Tl thallium 204	82 Pb lead 207	83 Bi bismuth 209	84 Po polonium –	85 At astatine –	86 Rn radon –
87 Fr francium –	88 Ra radium –	89–103 actinoids	104 Rf rutherfordium –	105 Db dubnium –	106 Sg seaborgium –	107 Bh bohrium –	108 Hs hassium –	109 Mt meitnerium –	110 Ds darmstadtium –	111 Rg roentgenium –	112 Cn copernicium –		114 Fl flerovium –		116 Lv livermorium –		

Key

atomic number
atomic symbol
name
relative atomic mass

lanthanoids	57 La lanthanum 139	58 Ce cerium 140	59 Pr praseodymium 141	60 Nd neodymium 144	61 Pm promethium –	62 Sm samarium 150	63 Eu europium 152	64 Gd gadolinium 157	65 Tb terbium 159	66 Dy dysprosium 163	67 Ho holmium 165	68 Er erbium 167	69 Tm thulium 169	70 Yb ytterbium 173	71 Lu lutetium 175
actinoids	89 Ac actinium –	90 Th thorium 232	91 Pa protactinium 231	92 U uranium 238	93 Np neptunium –	94 Pu plutonium –	95 Am americium –	96 Cm curium –	97 Bk berkelium –	98 Cf californium –	99 Es einsteinium –	100 Fm fermium –	101 Md mendelevium –	102 No nobelium –	103 Lr lawrencium –

The volume of one mole of any gas is 24 dm^3 at room temperature and pressure (r.t.p.).