Cambridge Assessment International Education

Cambridge IGCSE™

CHEMISTRY **0620/11**

Paper 1 Multiple Choice (Core) **May/June 2023**

45 minutes

You must answer on the multiple choice answer sheet.

You will need: Multiple choice answer sheet
Soft clean eraser
Soft pencil (type B or HB is recommended)

INSTRUCTIONS

- There are **forty** questions on this paper. Answer **all** questions.
- For each question there are four possible answers **A**, **B**, **C** and **D**. Choose the **one** you consider correct and record your choice in soft pencil on the multiple choice answer sheet.
- Follow the instructions on the multiple choice answer sheet.
- Write in soft pencil.
- Write your name, centre number and candidate number on the multiple choice answer sheet in the spaces provided unless this has been done for you.
- Do **not** use correction fluid.
- Do **not** write on any bar codes.
- You may use a calculator.

INFORMATION

- The total mark for this paper is 40.
- Each correct answer will score one mark.
- Any rough working should be done on this question paper.
- The Periodic Table is printed in the question paper.

IB23 06_0620_11/2RP
© UCLES 2023

1 The diagram shows the result of dropping a purple crystal into water.

View solution



Which processes take place in this experiment?

	chemical reaction	diffusing	dissolving
A	✓	✓	✗
B	✓	✗	✗
C	✗	✗	✓
D	✗	✓	✓

2 Which row about elements, mixtures and compounds is correct?

View solution

	metallic element	non-metallic element	mixture	compound
A	copper	methane	brass	sulfur
B	brass	sulfur	copper	methane
C	copper	sulfur	brass	methane
D	brass	methane	copper	sulfur

3 What are the relative charge and relative mass of an electron?

View solution

	relative charge	relative mass
A	0	1
B	0	$\frac{1}{2000}$
C	–1	1
D	–1	$\frac{1}{2000}$

© UCLES 2023

4 The atomic structures of four particles, W, X, Y and Z, are shown.

View solution

	electrons	neutrons	protons
W	2	2	2
X	2	2	3
Y	2	3	2
Z	3	2	3

Which particles are isotopes of the same element?

A W and X **B** W and Y **C** X and Y **D** X and Z

5 Which row shows the properties of an ionic compound?

View solution

	electrical conductivity of solid	melting point / °C
A	good	98
B	good	3652
C	poor	78
D	poor	801

6 Which row describes the formation of single covalent bonds in methane?

View solution

A	atoms share a pair of electrons	both atoms gain a noble gas electronic structure
B	atoms share a pair of electrons	both atoms have the same number of electrons in their outer shell
C	electrons are transferred from one atom to another	both atoms gain a noble gas electronic structure
D	electrons are transferred from one atom to another	both atoms have the same number of electrons in their outer shell

7 Which equation represents the neutralisation of nitric acid using sodium hydroxide?

View solution

A $NaOH(aq) + HNO_3(aq) \rightarrow NaNO_3(aq) + H_2O(l)$

B $NaOH(aq) + HNO_3(aq) \rightarrow NaNO_3(l) + H_2O(l)$

C $NaOH(l) + HNO_3(l) \rightarrow NaNO_3(l) + H_2O(aq)$

D $NaOH(l) + HNO_3(l) \rightarrow NaNO_3(l) + H_2O(l)$

© UCLES 2023

8 What is the relative formula mass of ammonium nitrate, NH_4NO_3?

View solution

A 80 **B** 108 **C** 122 **D** 150

9 Concentrated aqueous sodium chloride is electrolysed using inert electrodes.

View solution

Gases X and Y are produced at the electrodes shown.

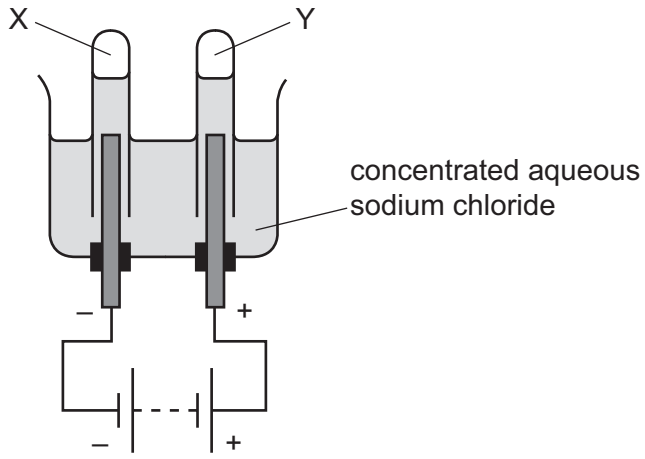

What are X and Y?

	X	Y
A	chlorine	hydrogen
B	hydrogen	chlorine
C	hydrogen	oxygen
D	oxygen	hydrogen

10 Which statement about hydrogen fuel cells is correct?

View solution

A Hydrogen fuel cells do not produce carbon dioxide.

B Hydrogen fuel cells do not need oxygen.

C The waste from a hydrogen fuel cell is an acidic gas.

D The reaction in a fuel cell is endothermic.

© UCLES 2023

11 A reaction pathway diagram is shown.

View solution

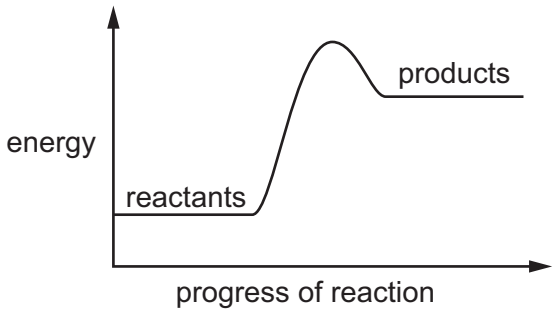

Which statement about this reaction is correct?

A The reaction rate increases during the reaction.

B The reaction is endothermic.

C The reaction transfers thermal energy to the surroundings.

D The temperature of the surroundings increases.

12 Lumps of calcium carbonate react with dilute hydrochloric acid as shown.

View solution

$$CaCO_3 + 2HCl \rightarrow CaCl_2 + H_2O + CO_2$$

Which change in conditions decreases the rate of the reaction?

A increasing the concentration of the acid

B increasing the volume of the acid

C increasing the size of the lumps of calcium carbonate

D increasing the temperature

13 Solid copper(II) sulfate exists in two different forms, anhydrous and hydrated.

View solution

One of these forms is blue and the other is white.

The change between these two forms is reversible.

$$\text{blue form} \rightleftharpoons \text{white form}$$

What is the blue form and how is the change from the blue form to the white form brought about?

	blue form	change to white form
A	anhydrous	add water
B	anhydrous	heat
C	hydrated	add water
D	hydrated	heat

© UCLES 2023

14 Four redox equations and statements about the equations are shown.

View solution

	reaction	statement
1	$C + O_2 \rightarrow CO_2$	carbon is oxidised
2	$CO_2 + C \rightarrow 2CO$	carbon dioxide is oxidised
3	$CO_2 + C \rightarrow 2CO$	carbon is oxidised
4	$Fe_2O_3 + 3CO \rightarrow 2Fe + 3CO_2$	iron(III) oxide is oxidised

Which statements about the equations are correct?

A 1 and 2 **B** 1 and 3 **C** 2 and 4 **D** 3 and 4

15 Sodium hydroxide forms an alkaline solution with a pH of 14.

View solution

Which indicator turns yellow when added to this solution?

A litmus

B methyl orange

C thymolphthalein

D universal indicator

16 Which row identifies an acidic oxide and a basic oxide?

View solution

	acidic oxide	basic oxide
A	CaO	CuO
B	CaO	SO_2
C	CO_2	CuO
D	CO_2	SO_2

17 A student makes aqueous copper(II) chloride by adding excess copper(II) carbonate to dilute hydrochloric acid.

View solution

What is the next step in the method in the formation of solid copper(II) chloride?

A crystallisation

B evaporation

C filtration

D titration

© UCLES 2023

18 Which statements about the trends across a period of the Periodic Table are correct?

View solution

1 Aluminium is more metallic than sodium.

2 Beryllium is more metallic than carbon.

3 Boron is more metallic than lithium.

4 Magnesium is more metallic than silicon.

A 1 and 2 **B** 1 and 3 **C** 2 and 4 **D** 3 and 4

19 Which row shows the trend in melting point, density and reactivity as Group I is descended?

View solution

	melting point	density	reactivity
A	increases	decreases	decreases
B	decreases	increases	increases
C	increases	decreases	increases
D	decreases	increases	decreases

20 Which row describes a similarity and a difference between chlorine and bromine?

View solution

	similarity	difference
A	both are gases at room temperature and pressure	chlorine and bromine have different colours
B	both exist as diatomic molecules	chlorine is more dense than bromine
C	both have atoms with seven outer-shell electrons	only bromine will react with aqueous sodium chloride
D	both react with aqueous potassium iodide	chlorine is more reactive than bromine

21 Which statement describes transition elements?

View solution

A They have high densities and high melting points.

B They have high densities and low melting points.

C They have low densities and high melting points.

D They have low densities and low melting points.

© UCLES 2023

22 Which diagram shows the electronic structure of a noble gas?

View solution

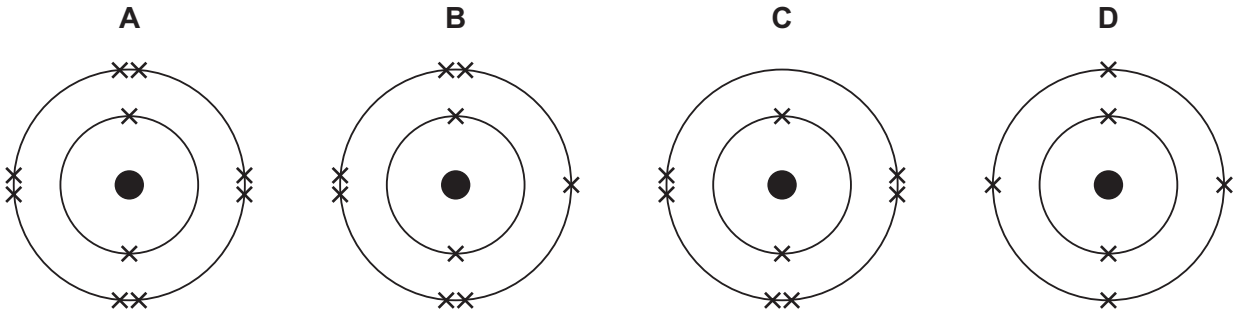

23 Which gas is made when powdered zinc is added to dilute hydrochloric acid?

View solution

A carbon dioxide

B chlorine

C hydrogen

D oxygen

24 Which metal is used in aircraft manufacture because it has a low density?

View solution

A aluminium

B copper

C iron

D potassium

25 The diagram represents the structure of a solid.

View solution

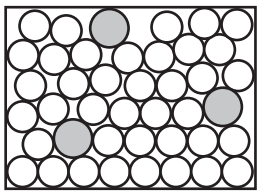

Which solids does the diagram represent?

	brass	graphite	sodium chloride
A	✓	✓	✗
B	✓	✗	✗
C	✗	✓	✓
D	✗	✗	✓

© UCLES 2023

26 Three students, X, Y and Z, are told that solid P reacts with dilute acids and also conducts electricity.

View solution

The table shows the students' suggestions about the identity of P.

X	Y	Z
copper	iron	graphite

Which students are correct?

A X, Y and Z **B** X only **C** Y only **D** Z only

View solution

27 Which substances in the air are needed for iron to rust?

A oxygen and water

B oxygen only

C water and carbon dioxide

D water only

View solution

28 Part of the reactivity series of metals is shown.

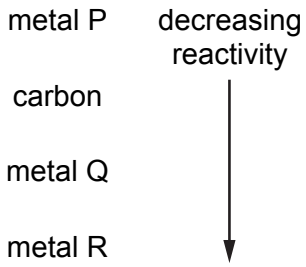

Which row shows how each metal is extracted from its ore?

	metal P	metal Q	metal R
A	electrolysis of molten ore	electrolysis of molten ore	heating with carbon
B	heating with carbon	electrolysis of molten ore	electrolysis of molten ore
C	heating with carbon	heating with carbon	electrolysis of molten ore
D	electrolysis of molten ore	heating with carbon	heating with carbon

© UCLES 2023

29 Several processes are used to treat domestic water.

View solution

Which row identifies a reason for the given process?

	process	reason
A	chlorination	removes impurities
B	filtration	removes insoluble solids
C	sedimentation	removes soluble solids
D	use of carbon	kills bacteria

View solution

30 Which pair of compounds make an NPK fertiliser?

A ammonium sulfate and potassium phosphate

B calcium hydroxide and ammonium nitrate

C calcium phosphate and potassium chloride

D potassium nitrate and ammonium sulfate

View solution

31 Some information about gas X is listed.

- It is not present in clean, dry air.
- It is not a cause of respiratory problems.
- It is responsible for global warming.

What is X?

A carbon dioxide

B carbon monoxide

C methane

D nitrogen dioxide

© UCLES 2023

32 Part of the structure of a molecule of vitamin A is shown.

View solution

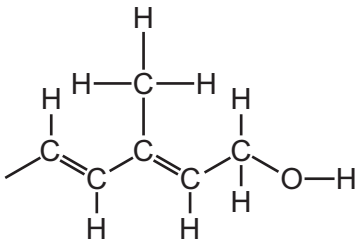

Which statements about this part of the structure are correct?

1 It is saturated.

2 There are two alkene groups.

3 The structure shows a carboxylic acid.

A 1 and 3 **B** 1 only **C** 2 and 3 **D** 2 only

View solution

33 The fractional distillation of petroleum is shown.

Which fraction contains hydrocarbons with the longest chain length?

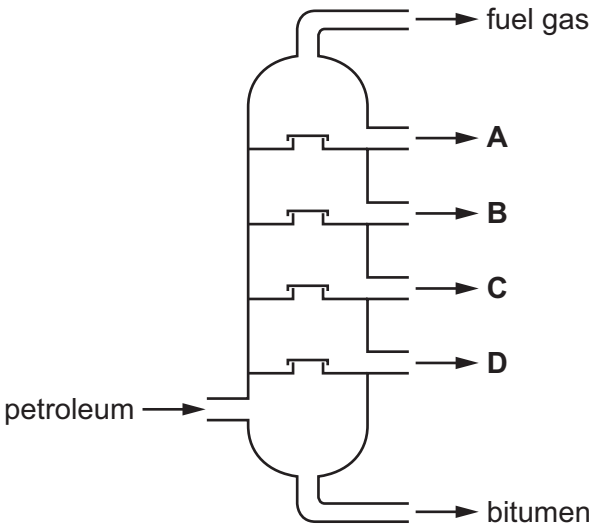

View solution

34 Which equation represents the cracking of an alkane?

A $3C_2H_4 \rightarrow C_6H_{12}$

B $C_6H_{12} + H_2 \rightarrow C_6H_{14}$

C $C_6H_{14} \rightarrow 6C + 7H_2$

D $C_6H_{14} \rightarrow C_2H_4 + C_4H_{10}$

© UCLES 2023

35 Which statements about ethanol are correct?

View solution

1 Ethanol is made by reacting steam with ethene at 300 °C.

2 Ethanol is made by fermentation at 55 °C.

3 Ethanol burns to produce carbon dioxide and water.

4 Ethanol contains a carbon–carbon double bond.

A 1 and 2 **B** 1 and 3 **C** 2 and 3 **D** 3 and 4

36 Which substances react with aqueous ethanoic acid to form a gas?

View solution

1 magnesium

2 magnesium carbonate

3 magnesium oxide

A 1, 2 and 3 **B** 1 and 2 only **C** 1 and 3 only **D** 2 and 3 only

37 In reaction R, 2000 molecules of $CH_2=CH_2$ react to form a single molecule X only.

View solution

$$2000\ CH_2=CH_2 \rightarrow X$$

Which terms describe reaction R, $CH_2=CH_2$ and X?

	reaction R	$CH_2=CH_2$	X
A	addition	monomer	polymer
B	addition	polymer	monomer
C	substitution	monomer	polymer
D	substitution	polymer	monomer

© UCLES 2023

38 The concentration of acids and alkalis can be determined by titration.

View solution

Which pieces of equipment are needed to perform a titration?

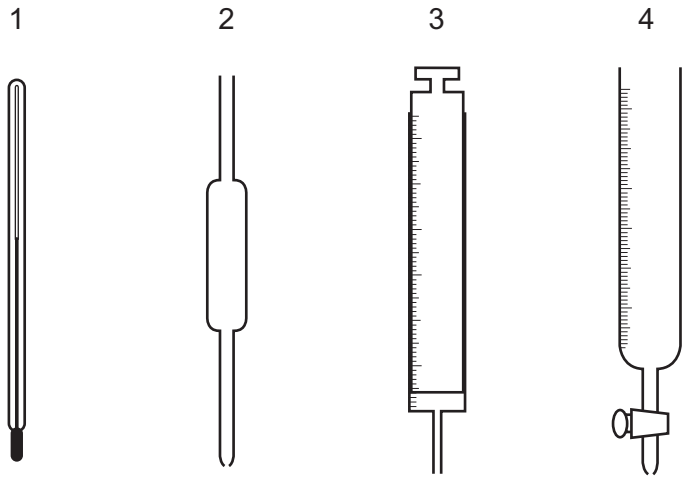

A 1 and 2 **B** 1 and 3 **C** 2 and 3 **D** 2 and 4

39 Which process is used to produce drinking water from sea water?

View solution

A crystallisation

B distillation

C filtration

D chlorination

40 The results of two separate tests on a white solid X are shown.

View solution

test	result
add dilute nitric acid	effervescence
add aqueous sodium hydroxide and warm	a gas is formed which turns damp red litmus paper blue

What is X?

A aluminium carbonate

B aluminium nitrate

C ammonium carbonate

D ammonium nitrate

© UCLES 2023

BLANK PAGE

BLANK PAGE

Permission to reproduce items where third-party owned material protected by copyright is included has been sought and cleared where possible. Every reasonable effort has been made by the publisher (UCLES) to trace copyright holders, but if any items requiring clearance have unwittingly been included, the publisher will be pleased to make amends at the earliest possible opportunity.

To avoid the issue of disclosure of answer-related information to candidates, all copyright acknowledgements are reproduced online in the Cambridge Assessment International Education Copyright Acknowledgements Booklet. This is produced for each series of examinations and is freely available to download at www.cambridgeinternational.org after the live examination series.

Cambridge Assessment International Education is part of Cambridge Assessment. Cambridge Assessment is the brand name of the University of Cambridge Local Examinations Syndicate (UCLES), which is a department of the University of Cambridge.

© UCLES 2023

© UCLES 2023

The Periodic Table of Elements

Group																	
I	II											III	IV	V	VI	VII	VIII
							1 H hydrogen 1										2 He helium 4
3 Li lithium 7	4 Be beryllium 9											5 B boron 11	6 C carbon 12	7 N nitrogen 14	8 O oxygen 16	9 F fluorine 19	10 Ne neon 20
11 Na sodium 23	12 Mg magnesium 24											13 Al aluminium 27	14 Si silicon 28	15 P phosphorus 31	16 S sulfur 32	17 Cl chlorine 35.5	18 Ar argon 40
19 K potassium 39	20 Ca calcium 40	21 Sc scandium 45	22 Ti titanium 48	23 V vanadium 51	24 Cr chromium 52	25 Mn manganese 55	26 Fe iron 56	27 Co cobalt 59	28 Ni nickel 59	29 Cu copper 64	30 Zn zinc 65	31 Ga gallium 70	32 Ge germanium 73	33 As arsenic 75	34 Se selenium 79	35 Br bromine 80	36 Kr krypton 84
37 Rb rubidium 85	38 Sr strontium 88	39 Y yttrium 89	40 Zr zirconium 91	41 Nb niobium 93	42 Mo molybdenum 96	43 Tc technetium –	44 Ru ruthenium 101	45 Rh rhodium 103	46 Pd palladium 106	47 Ag silver 108	48 Cd cadmium 112	49 In indium 115	50 Sn tin 119	51 Sb antimony 122	52 Te tellurium 128	53 I iodine 127	54 Xe xenon 131
55 Cs caesium 133	56 Ba barium 137	57–71 lanthanoids	72 Hf hafnium 178	73 Ta tantalum 181	74 W tungsten 184	75 Re rhenium 186	76 Os osmium 190	77 Ir iridium 192	78 Pt platinum 195	79 Au gold 197	80 Hg mercury 201	81 Tl thallium 204	82 Pb lead 207	83 Bi bismuth 209	84 Po polonium –	85 At astatine –	86 Rn radon –
87 Fr francium –	88 Ra radium –	89–103 actinoids	104 Rf rutherfordium –	105 Db dubnium –	106 Sg seaborgium –	107 Bh bohrium –	108 Hs hassium –	109 Mt meitnerium –	110 Ds darmstadtium –	111 Rg roentgenium –	112 Cn copernicium –	113 Nh nihonium –	114 Fl flerovium –	115 Mc moscovium –	116 Lv livermorium –	117 Ts tennessine –	118 Og oganesson –

Key

atomic number
atomic symbol
name
relative atomic mass

lanthanoids	57 La lanthanum 139	58 Ce cerium 140	59 Pr praseodymium 141	60 Nd neodymium 144	61 Pm promethium –	62 Sm samarium 150	63 Eu europium 152	64 Gd gadolinium 157	65 Tb terbium 159	66 Dy dysprosium 163	67 Ho holmium 165	68 Er erbium 167	69 Tm thulium 169	70 Yb ytterbium 173	71 Lu lutetium 175
actinoids	89 Ac actinium –	90 Th thorium 232	91 Pa protactinium 231	92 U uranium 238	93 Np neptunium –	94 Pu plutonium –	95 Am americium –	96 Cm curium –	97 Bk berkelium –	98 Cf californium –	99 Es einsteinium –	100 Fm fermium –	101 Md mendelevium –	102 No nobelium –	103 Lr lawrencium –

The volume of one mole of any gas is 24 dm^3 at room temperature and pressure (r.t.p.).