CAMBRIDGE
International Education

Cambridge IGCSE™

CHEMISTRY **0620/21**

Paper 2 Multiple Choice (Extended) **May/June 2026**

45 minutes

You must answer on the multiple choice answer sheet.

You will need: Multiple choice answer sheet
Soft clean eraser
Soft pencil (type B or HB is recommended)

INSTRUCTIONS

- There are **forty** questions on this paper. Answer **all** questions.
- For each question there are four possible answers **A**, **B**, **C** and **D**. Choose the **one** you consider correct and record your choice in soft pencil on the multiple choice answer sheet.
- Follow the instructions on the multiple choice answer sheet.
- Write in soft pencil.
- Write your name, centre number and candidate number on the multiple choice answer sheet in the spaces provided unless this has been done for you.
- Do **not** use correction fluid or tape.
- Do **not** write on any bar codes.
- You may use a calculator.

INFORMATION

- The total mark for this paper is 40.
- Each correct answer will score one mark.
- Any rough working should be done on this question paper.
- The Periodic Table is printed in the question paper.

This document has **16** pages. Any blank pages are indicated.

© Cambridge University Press & Assessment 2026

1 When water evaporates from a brass surface, the temperature of the brass surface decreases.

View solution

Which row describes this evaporation process?

	type of process	direction of transfer of thermal energy
A	endothermic	from the brass surface to the water
B	endothermic	from the water to the brass surface
C	exothermic	from the brass surface to the water
D	exothermic	from the water to the brass surface

2 A solid lump of tin is heated until it melts.

View solution

Which statements describe what happens when solid tin melts?

1 The atoms of tin move further apart.

2 The atoms of tin lose thermal energy to the surroundings.

3 The atoms of tin gain thermal energy from the surroundings.

4 The temperature of the tin increases.

A 1 and 2 **B** 1 and 3 **C** 2 and 4 **D** 3 and 4

3 A gas is placed in a sealed container.

View solution

The gas has a pressure of one atmosphere and a temperature of 50 °C.

It is then heated to 100 °C.

Which row describes the cause of the pressure of the gas and the effect of increasing the temperature of the gas?

	the cause of gas pressure	the effect of increased temperature on the gas
A	collisions between gas particles and other gas particles	collisions between gas particles and other gas particles become less frequent
B	collisions between gas particles and other gas particles	the average velocity of the gas particles increases
C	collisions between gas particles and the sides of the container	collisions between gas particles and other gas particles become less frequent
D	collisions between gas particles and the sides of the container	the average velocity of the gas particles increases

© Cambridge University Press & Assessment 2026

4 A sample of element X has two isotopes.

View solution

The symbols for the two isotopes are ^{63}X and ^{65}X.

The relative abundance of ^{65}X is 25.0%.

What is the relative atomic mass of X?

A 63.5 **B** 63.7 **C** 64.0 **D** 64.5

5 Which statement about magnesium chloride, $MgCl_2$, is correct?

View solution

A Molten magnesium chloride conducts electricity because its electrons are free to move.

B It consists of anions and cations which have completely filled outer electron shells.

C It has a high melting point because its covalent bonds are very strong.

D The magnesium ions and chloride ions are bonded together by delocalised electrons.

6 Which row describes the structure of a solid metal and explains the property?

View solution

	structure of solid metal	property of solid metal
A	lattice of negative ions in a sea of electrons	conducts electricity because the electrons are free to move
B	lattice of negative ions in a sea of electrons	is malleable because the layers of ions can slide over each other
C	lattice of positive ions in a sea of electrons	conducts electricity because the ions are free to move
D	lattice of positive ions in a sea of electrons	is malleable because the layers of ions can slide over each other

7 Which atom or ion has the electronic configuration 2,8,8?

View solution

A Ne **B** Na^+ **C** Br^- **D** Ca^{2+}

8 The formula of a compound containing element Z is $Na_2Z_2O_3$.

View solution

The relative formula mass of the compound is 158.

What is the relative atomic mass of Z?

A 32 **B** 59.5 **C** 64 **D** 119

© Cambridge University Press & Assessment 2026

9 Magnesium reacts with steam to form hydrogen.

View solution

$$Mg + H_2O \rightarrow MgO + H_2$$

How many molecules of hydrogen gas are made when 3.6 g of magnesium are heated with 1.8 g of steam?

(Assume Avogadro's constant = 6×10^{23} and the yield of magnesium oxide is 100%.)

A 6×10^{22} **B** 12×10^{22} **C** 9×10^{22} **D** 18×10^{22}

10 Compound Y contains 48.65% carbon, 8.10% hydrogen and 43.25% oxygen by mass.

View solution

What is the empirical formula of compound Y?

A $C_3H_3O_2$ **B** C_2H_3O **C** CH_3O **D** $C_3H_6O_2$

11 Calcium carbonate is reacted with an excess of dilute hydrochloric acid.

View solution

$$CaCO_3 + 2HCl \rightarrow CaCl_2 + H_2O + CO_2$$

Which two changes, when applied together, will increase both the rate of reaction and the volume of carbon dioxide produced?

A increasing the concentration of hydrochloric acid and adding a catalyst

B increasing the volume of hydrochloric acid and the temperature of the reaction

C increasing the mass of calcium carbonate and the temperature of the reaction

D increasing the surface area of the calcium carbonate and adding a catalyst

12 Concentrated aqueous sodium chloride and dilute sulfuric acid are electrolysed with inert electrodes.

View solution

Which row describes the electrode products for each electrolyte?

	concentrated aqueous sodium chloride		**dilute sulfuric acid**	
	cathode	**anode**	**cathode**	**anode**
A	chlorine	hydrogen	hydrogen	oxygen
B	hydrogen	chlorine	hydrogen	oxygen
C	chlorine	hydrogen	oxygen	hydrogen
D	hydrogen	chlorine	oxygen	hydrogen

© Cambridge University Press & Assessment 2026

13 Which diagram shows the direction of movement of ions and electrons during the electrolysis of molten sodium chloride?

View solution

A

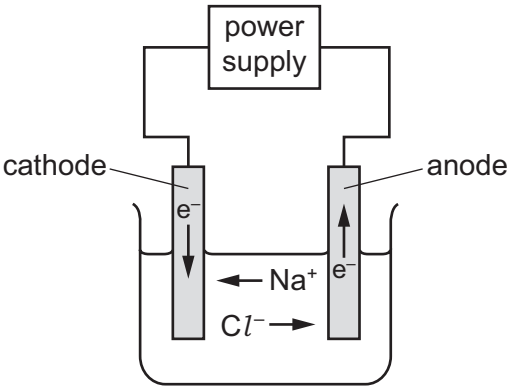

B

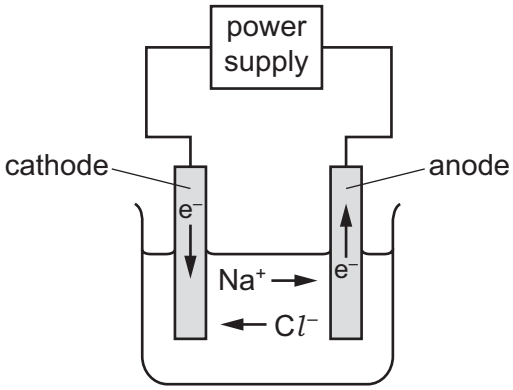

C

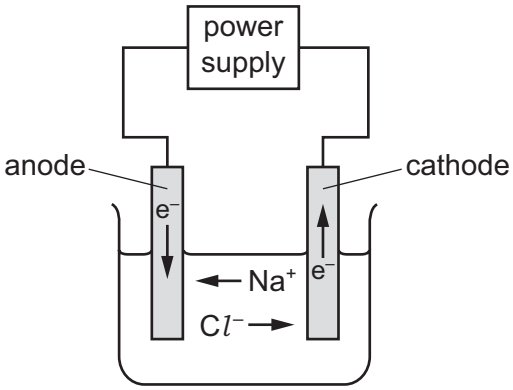

D

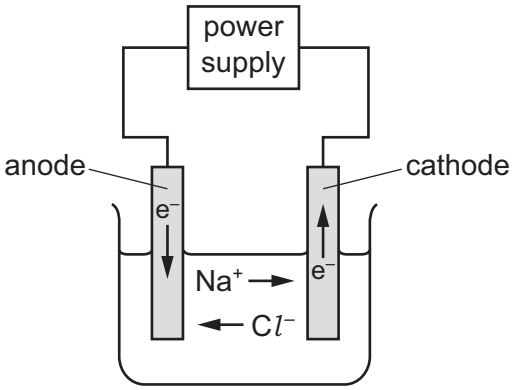

14 Which statement about hydrogen fuel cells is correct?

View solution

A Hydrogen fuel cells produce water as the only product.

B Hydrogen fuel cells do **not** need oxygen.

C The waste from a hydrogen fuel cell is an acidic gas.

D The reaction in a fuel cell is endothermic.

15 Which equation represents an endothermic reaction?

View solution

A $CH_4(g) + 2O_2(g) \rightarrow CO_2(g) + 2H_2O(l)$

B $Cl_2(g) \rightarrow 2Cl(g)$

C $H(g) + H(g) \rightarrow H_2(g)$

D $2K(s) + 2H_2O(l) \rightarrow 2KOH(aq) + H_2(g)$

© Cambridge University Press & Assessment 2026

16 The diagram shows the reaction pathway diagram for the reaction between X and Y to form product Z.

View solution

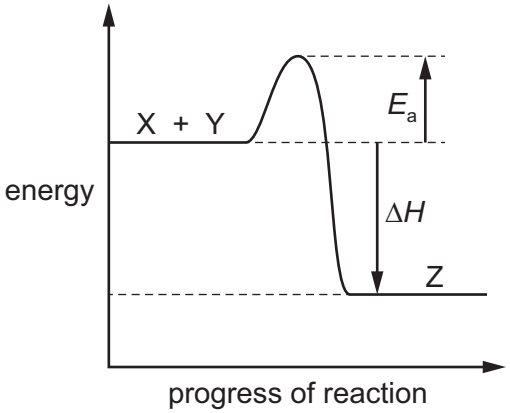

The reaction happens more rapidly if a catalyst is used.

How would the diagram change when a catalyst is used?

A The arrow representing E_a would be larger.

B The arrow representing E_a would be smaller.

C The arrow representing ΔH would be larger.

D The arrow representing ΔH would be smaller.

17 In a reaction, element J acts as an oxidising agent.

View solution

Which statements about J are correct?

1 J is oxidised.

2 J gains electrons.

3 J loses electrons.

4 The oxidation number of J decreases.

A 1 and 2 **B** 1 and 3 **C** 2 and 4 **D** 3 and 4

18 Four statements about the Haber process and the Contact process are listed.

View solution

1 Both processes are carried out at 200 kPa.

2 Both processes are carried out at 450 °C.

3 Both processes use a reactant that is extracted from air.

4 Both processes use iron as a catalyst.

Which two statements are correct?

A 1 and 2 **B** 1 and 4 **C** 2 and 3 **D** 3 and 4

© Cambridge University Press & Assessment 2026

19 Sodium hydroxide forms an alkaline solution.

View solution

Which indicator turns yellow when added to this solution?

A litmus

B methyl orange

C thymolphthalein

D universal indicator

20 What is the definition of a strong acid?

View solution

A It is a proton acceptor that is completely dissociated in aqueous solution.

B It is a proton acceptor that is partially dissociated in aqueous solution.

C It is a proton donor that is completely dissociated in aqueous solution.

D It is a proton donor that is partially dissociated in aqueous solution.

21 Tin(II) oxide, SnO, is amphoteric.

View solution

Which reactions show that tin(II) oxide is amphoteric?

1 $4SnO \rightarrow 2SnO_2 + 2Sn$

2 $SnO + 2HCl \rightarrow SnCl_2 + H_2O$

3 $2SnO + O_2 \rightarrow 2SnO_2$

4 $SnO + 2NaOH \rightarrow Na_2SnO_2 + H_2O$

A 1 and 2 **B** 1 and 3 **C** 2 and 3 **D** 2 and 4

22 Which statement defines the term water of crystallisation?

View solution

A the water molecules removed from a solution when a crystalline substance is formed

B the water required to dissolve a crystalline substance to make a solution

C the water molecules present in a hydrated crystalline solid

D the water added to a hydrated crystallised solid to make it anhydrous

© Cambridge University Press & Assessment 2026

23 The diagram shows the melting points of some Group I elements.

View solution

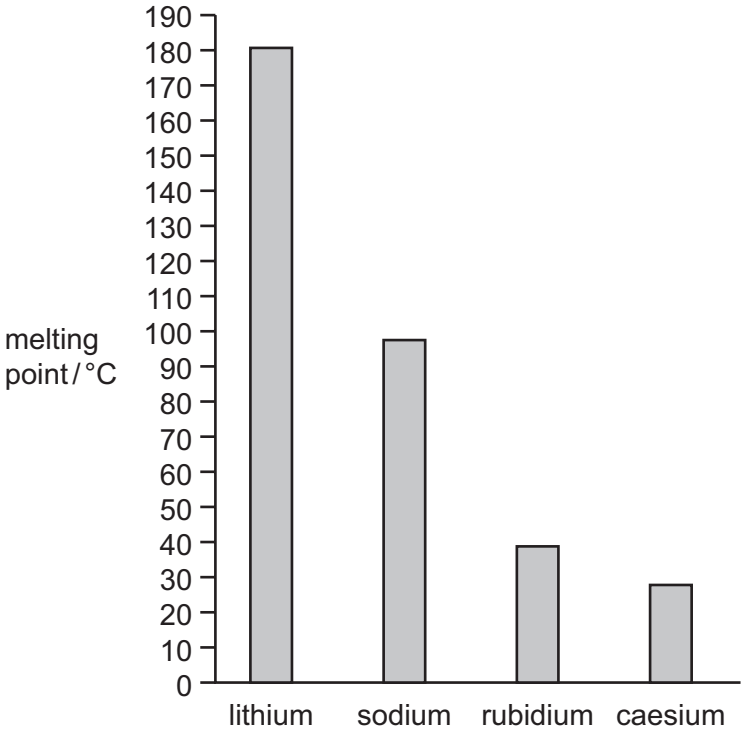

What is the melting point of potassium?

A 185.5 °C **B** 120.0 °C **C** 63.5 °C **D** 30.0 °C

24 Which row about the similarities and differences between chlorine and bromine is correct?

View solution

	similarities	differences
A	Both are gases at room temperature and pressure.	Chlorine and bromine have different colours.
B	Both exist as diatomic molecules.	Chlorine is denser than bromine.
C	Both have atoms with seven outer-shell electrons.	Only bromine will react with aqueous sodium chloride.
D	Both react with aqueous potassium iodide.	Chlorine is more reactive than bromine.

© Cambridge University Press & Assessment 2026

25 Which property of a metal is necessary for the named use?

View solution

	use of the metal	property of the metal
A	car bodies	ductile
B	cutlery	conducts heat
C	food containers	resists corrosion
D	overhead electrical cables	high density

26 The equation for the reaction between magnesium and aqueous copper(II) sulfate is shown.

View solution

$$Mg + CuSO_4 \rightarrow Cu + MgSO_4$$

Which statement is correct?

A Copper ions are oxidised to copper metal during the reaction.

B Copper is displaced because it is more reactive than magnesium.

C The oxidation number of magnesium decreases during the reaction.

D The reaction happens because magnesium has a greater tendency to form positive ions than copper.

27 Steel is an alloy of iron.

View solution

Zinc is used to protect a steel car body from rusting. The steel body is completely coated in zinc.

Which statements about this use of zinc are correct?

1 The layer of zinc prevents oxygen reaching the steel to cause rust.

2 Zinc is used because it is a more reactive metal than iron.

3 If the zinc layer is scratched, the steel will rust.

A 1, 2 and 3 **B** 1 and 2 only **C** 1 only **D** 2 and 3 only

28 Which test results show that a sample of water is pure?

View solution

1 Its boiling point is 100 °C.

2 Its freezing point is 0 °C.

3 It turns anhydrous cobalt(II) chloride from blue to pink.

4 It turns anhydrous copper(II) sulfate from white to blue.

A 1 and 2 **B** 1 and 4 **C** 2 and 3 **D** 3 and 4

© Cambridge University Press & Assessment 2026

29 Which mixture of salts can be used as an NPK fertiliser?

View solution

A ammonium phosphate + potassium sulfate

B calcium phosphate + sodium nitrate

C potassium nitrate + calcium sulfate

D sodium phosphate + ammonium nitrate

30 Three air pollutants, X, Y and Z, are described.

View solution

X is a toxic gas formed by the incomplete combustion of fossil fuels.

Y is formed by decomposing vegetation and increases global warming.

Z is a cause of breathing problems and acid rain.

What are X, Y and Z?

	X	Y	Z
A	carbon monoxide	methane	nitrogen oxides
B	carbon monoxide	particulates	carbon dioxide
C	sulfur dioxide	methane	particulates
D	sulfur dioxide	particulates	carbon dioxide

31 Which statement about members of the carboxylic acid homologous series is correct?

View solution

A They have the same empirical formula and similar chemical properties.

B They have the same empirical formula and their displayed formula differs by a $–CH_2–$ unit.

C They have the same functional group and the same physical properties.

D They have the same functional group and similar chemical properties.

32 Which of the named compounds have the correct structural formula?

View solution

1 ethanoic acid, CH_3CH_2COOH

2 propan-2-ol, $CH_3CH(OH)CH_3$

3 but-2-ene, $CH_3CH=CHCH_3$

A 1 and 2 **B** 1 and 3 **C** 2 and 3 **D** 3 only

© Cambridge University Press & Assessment 2026

33 The diagram shows a simple fractionating column for petroleum.

View solution

Which outlet produces the fraction with the most viscous liquids?

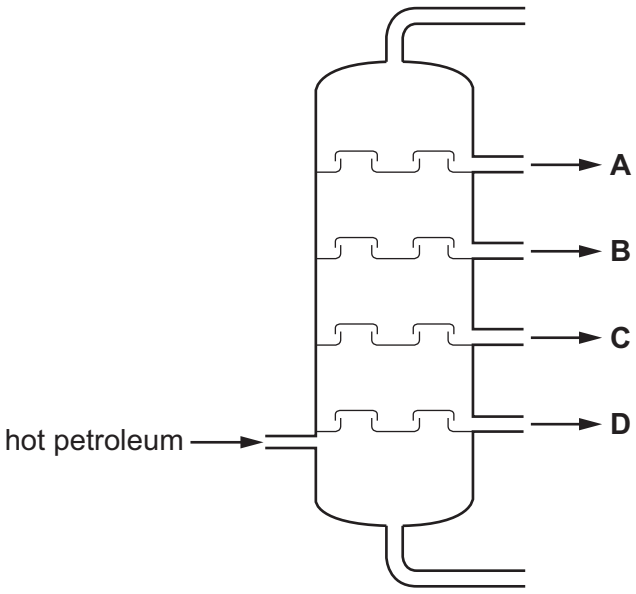

34 Propene reacts separately with:

View solution

- liquid bromine, Br_2
- hydrogen gas, H_2
- steam, H_2O.

Which statement about these three reactions is correct?

A Two of the reactions are addition reactions and one is a substitution reaction.

B The products of all three of these reactions are molecules containing exactly 9 atoms.

C The products of two of these reactions are molecules containing exactly 9 atoms.

D The products of two of these reactions are molecules containing exactly 11 atoms.

© Cambridge University Press & Assessment 2026

35 Polymers are described as addition polymers or condensation polymers.

View solution

Which two rows give a correct statement about each type of polymerisation?

	addition polymerisation	condensation polymerisation
1	Monomers have different functional groups.	Monomers have a double bond.
2	No other products are produced.	A small molecule is produced as a second product.
3	Monomers have a double bond.	Monomers have different functional groups.
4	Nylon is an addition polymer.	Polyester is a condensation polymer.

A 1 and 3 **B** 1 and 4 **C** 2 and 3 **D** 2 and 4

36 Alanine is an amino acid. The structural formula of alanine is shown.

View solution

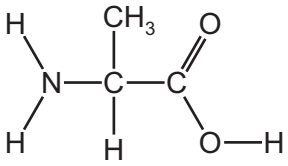

It is the only monomer in a polymer.

Which diagram represents a section of this polymer?

A

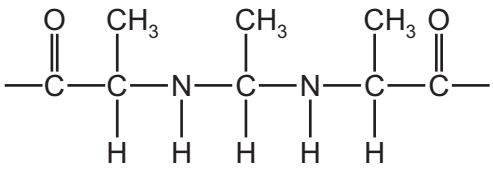

B

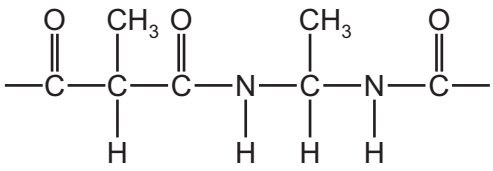

C

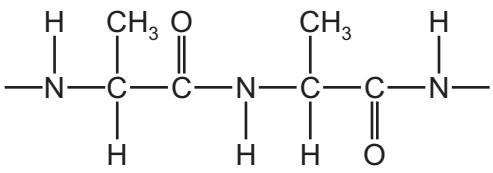

D

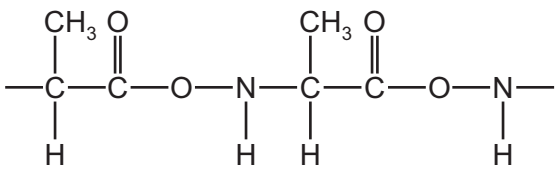

© Cambridge University Press & Assessment 2026

37 Which statements describe an environmental challenge caused by the disposal of plastics?

View solution

1 The burning of the plastics can release toxic gases.

2 Plastics are harmful to marine life.

3 Plastics decompose very slowly in the environment.

A 1, 2 and 3 **B** 1 and 2 only **C** 1 and 3 only **D** 2 and 3 only

38 Magnesium reacts with dilute hydrochloric acid to produce hydrogen gas.

View solution

Which pieces of apparatus are needed to determine the rate of this reaction?

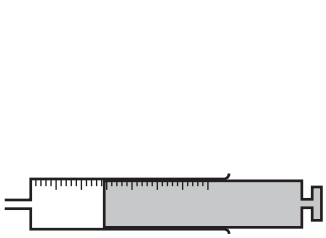

1



2

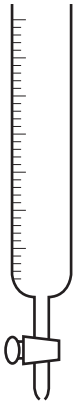

3

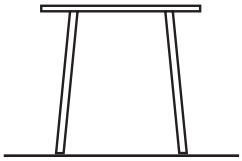

4

A 1 and 2 **B** 1 and 3 **C** 2 and 4 **D** 3 and 4

39 Solution X contains aqueous sulfite ions.

View solution

Which method describes the test for the aqueous sulfite ions in X?

A Add nitric acid to X. The gas produced turns limewater cloudy.

B Add nitric acid to X. The gas produced decolourises aqueous potassium manganate(VII).

C Add nitric acid to X then add aqueous barium chloride to give a white precipitate.

D Add nitric acid to X then add aqueous silver nitrate to give a pale yellow precipitate.

© Cambridge University Press & Assessment 2026

40 A chemical mixture is separated using paper chromatography.

View solution

The chromatogram is shown.

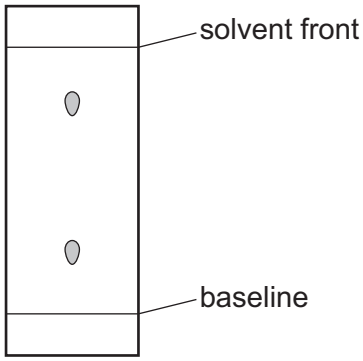

Which statements are correct?

1 The spot nearest the solvent front has an R_f value greater than 0.50.

2 Insoluble compounds rise with the solvent front.

3 The lower spot is a less soluble substance than the higher spot.

A 1, 2 and 3 **B** 1 and 2 only **C** 1 and 3 only **D** 2 and 3 only

© Cambridge University Press & Assessment 2026

BLANK PAGE

Permission to reproduce items where third-party owned material protected by copyright is included has been sought and cleared where possible. Every reasonable effort has been made by the publisher (Cambridge University Press & Assessment) to trace copyright holders, but if any items requiring clearance have unwittingly been included, the publisher will be pleased to make amends at the earliest possible opportunity.

To avoid the issue of disclosure of answer-related information to candidates, all copyright acknowledgements are reproduced online in our Copyright Acknowledgements Booklet. This is produced for each series of examinations and is freely available to download at www.cambridgeinternational.org after the live examination series.

Cambridge International Education is the name of our awarding body and a part of Cambridge University Press & Assessment, which is a department of the University of Cambridge.

© Cambridge University Press & Assessment 2026

© Cambridge University Press & A

The Periodic Table of Elements

Group																	
I	II											III	IV	V	VI	VII	VIII
							1 H hydrogen 1										2 He helium 4
3 Li lithium 7	4 Be beryllium 9											5 B boron 11	6 C carbon 12	7 N nitrogen 14	8 O oxygen 16	9 F fluorine 19	10 Ne neon 20
11 Na sodium 23	12 Mg magnesium 24											13 Al aluminium 27	14 Si silicon 28	15 P phosphorus 31	16 S sulfur 32	17 Cl chlorine 35.5	18 Ar argon 40
19 K potassium 39	20 Ca calcium 40	21 Sc scandium 45	22 Ti titanium 48	23 V vanadium 51	24 Cr chromium 52	25 Mn manganese 55	26 Fe iron 56	27 Co cobalt 59	28 Ni nickel 59	29 Cu copper 64	30 Zn zinc 65	31 Ga gallium 70	32 Ge germanium 73	33 As arsenic 75	34 Se selenium 79	35 Br bromine 80	36 Kr krypton 84
37 Rb rubidium 85	38 Sr strontium 88	39 Y yttrium 89	40 Zr zirconium 91	41 Nb niobium 93	42 Mo molybdenum 96	43 Tc technetium –	44 Ru ruthenium 101	45 Rh rhodium 103	46 Pd palladium 106	47 Ag silver 108	48 Cd cadmium 112	49 In indium 115	50 Sn tin 119	51 Sb antimony 122	52 Te tellurium 128	53 I iodine 127	54 Xe xenon 131
55 Cs caesium 133	56 Ba barium 137	57–71 lanthanoids	72 Hf hafnium 178	73 Ta tantalum 181	74 W tungsten 184	75 Re rhenium 186	76 Os osmium 190	77 Ir iridium 192	78 Pt platinum 195	79 Au gold 197	80 Hg mercury 201	81 Tl thallium 204	82 Pb lead 207	83 Bi bismuth 209	84 Po polonium –	85 At astatine –	86 Rn radon –
87 Fr francium –	88 Ra radium –	89–103 actinoids	104 Rf rutherfordium –	105 Db dubnium –	106 Sg seaborgium –	107 Bh bohrium –	108 Hs hassium –	109 Mt meitnerium –	110 Ds darmstadtium –	111 Rg roentgenium –	112 Cn copernicium –	113 Nh nihonium –	114 Fl flerovium –	115 Mc moscovium –	116 Lv livermorium –	117 Ts tennessine –	118 Og oganesson –

Key

atomic number
atomic symbol
name
relative atomic mass

lanthanoids	57 La lanthanum 139	58 Ce cerium 140	59 Pr praseodymium 141	60 Nd neodymium 144	61 Pm promethium –	62 Sm samarium 150	63 Eu europium 152	64 Gd gadolinium 157	65 Tb terbium 159	66 Dy dysprosium 163	67 Ho holmium 165	68 Er erbium 167	69 Tm thulium 169	70 Yb ytterbium 173	71 Lu lutetium 175
actinoids	89 Ac actinium –	90 Th thorium 232	91 Pa protactinium 231	92 U uranium 238	93 Np neptunium –	94 Pu plutonium –	95 Am americium –	96 Cm curium –	97 Bk berkelium –	98 Cf californium –	99 Es einsteinium –	100 Fm fermium –	101 Md mendelevium –	102 No nobelium –	103 Lr lawrencium –

The volume of one mole of any gas is 24 dm^3 at room temperature and pressure (r.t.p.).